MIDTOWN AT MACQUARIE PARK, IVANHOE

STAGE 1B LANDSCAPE WORKS
TENDER DOCUMENTATION

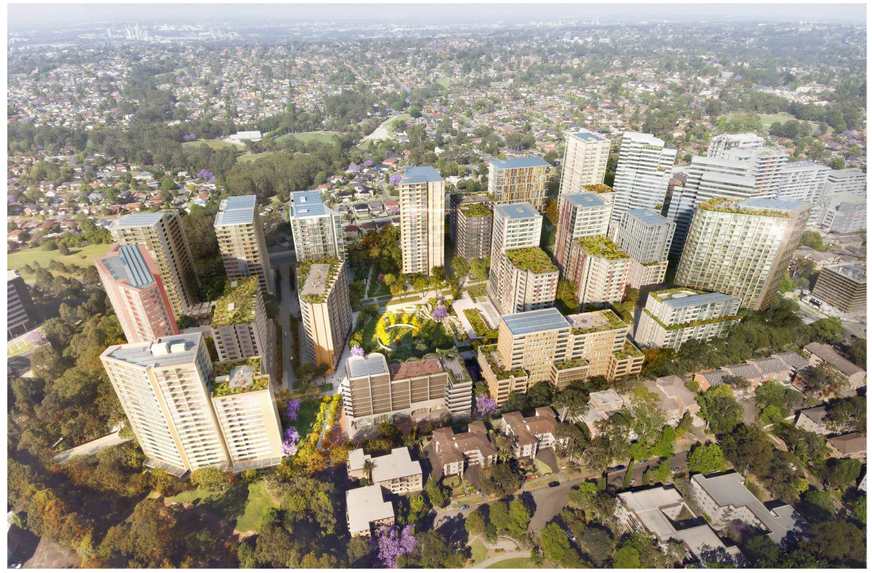

These plans are referred to in
certificate no. **16746** approved by:

Eric Hausfeld
Registered Certifier

Registration No: BDC 2416

Categories: Certifier – Subdivision
Certifier – Strata
Certifier – Stormwater
Certifier – Road & Drainage
Certifier – Hydraulic (stormwater)

Land Development Certificates
www.LDC.com.au

CONSULTANT

Hassell LTD ABN 24 007 711 435
Level2, Pier 8/9,23 Hickson Rd
Sydney NSW 2000 Australia
T +61 2 9101 2000
F +61 2 9101 2100
sydney@hassellstudio.com
Nominated Architects NSW:
Tony Grist 5350
Glenn Scott 6842
Ross de la Motte 7398

REFERENCE

NORTH

NOTES

1. Do not scale drawing. Written dimensions govern
2. All dimensions are in millimeters unless noted otherwise
3. All dimensions shall be verified on site before proceeding with the work. Hassell shall be notified in writing of any discrepancies.
4. This drawing must be read in conjunction with all relevant contracts, specifications and drawings

This drawing is an uncontrolled copy. Unless noted otherwise

© Copyright of this drawing is vested in Hassell Ltd.

REV	DESCRIPTION	DATE
A	FOR TENDER	16 08 2021

CLIENT
FRASERS PROPERTY AUSTRALIA

PROJECT
STAGE 1B STREETSCAPES
MIDTOWN IVANHOE, MACQUARIE PARK
SYDNEY, NSW 2113

STATUS
TENDER DOCUMENTATION

DRAWING TITLE
COVER SHEET

REVIEWED
GD

SCALE @ A1

APPROVED

PROJECT NO.
012092

DRAWING NO.
HSL_S1B_0001

REV NO.
A

DRAWING INDEX

DRAWING No.	DRAWING TITLE
GENERAL	
HSL_S1B_0001	COVER SHEET
HSL_S1B_0002	DRAWING INDEX
HSL_S1B_0003	DRAWING LEGEND
HSL_S1B_0004	PLANTING SCHEUDLE
SITE PLAN	
HSL_S1B_0100	SITE PLAN
GENERAL ARRANGEMENT PLANS	
HSL_S1B_1001	GENERAL ARRANGEMENT PLAN SHEET 1 OF 10
HSL_S1B_1002	GENERAL ARRANGEMENT PLAN SHEET 2 OF 10
HSL_S1B_1003	GENERAL ARRANGEMENT PLAN SHEET 3 OF 10
HSL_S1B_1004	GENERAL ARRANGEMENT PLAN SHEET 4 OF 10
HSL_S1B_1005	GENERAL ARRANGEMENT PLAN SHEET 5 OF 10
~~HSL_S1B_1006~~	~~GENERAL ARRANGEMENT PLAN SHEET 6 OF 10~~
HSL_S1B_1007	GENERAL ARRANGEMENT PLAN SHEET 7 OF 10
HSL_S1B_1008	GENERAL ARRANGEMENT PLAN SHEET 8 OF 10
HSL_S1B_1009	GENERAL ARRANGEMENT PLAN SHEET 9 OF 10
HSL_S1B_1010	GENERAL ARRANGEMENT PLAN SHEET 10 OF 10
HSL_S1B_5001	DETAIL PLAN SHEET - BRIDGE
DETAILS	
HSL_S1B-5201	DETAILS - FURNITURE & FIXTURE
HSL_S1B-5202	DETAILS - FURNITURE & FIXTURE
HSL_S1B-5203	DETAILS - FURNITURE & FIXTURE
HSL_S1B-5301	DETAILS - PAVING
HSL_S1B-5302	DETAILS - PAVING
HSL_S1B-5401	DETAILS - PLANTING
SPECIFICATIONS	
HSL_S1B-6001	MATERIALS & FINISHES SCHEDULE
HSL_S1B-6003	LANDSCAPE SPECIFICATION
APPENDIX	
APPENDIX 1	PORPHYRY SETTS VEHICULAR PAVEMENT - 'STANDARD DRAWINGS CITY OF RYDE'
APPENDIX 2	GRANITE EXPANSION JOINT - 'STANDARD DRAWINGS CITY OF RYDE'
APPENDIX 3	GRANITE ISOLATION JOINT - 'STANDARD DRAWINGS CITY OF RYDE'
APPENDIX 4	TREE PIT WITH GRATE AND GRANITE BANDING TYPICAL - 'STANDARD DRAWINGS CITY OF RYDE'
APPENDIX 5	STEEL EDGE TYPES GRANITE PAVING TO GARDEN BED 'STANDARD DRAWINGS CITY OF RYDE'

C DRAWING ADDED

C UPDATED

These plans are referred to in certificate no. **16746** approved by:

Eric Hausfeld
Registered Certifier

Registration No: BDC 2416
Categories: Certifier – Subdivision
Certifier – Strata
Certifier – Stormwater
Certifier – Road & Drainage
Certifier – Hydraulic (stormwater)

Land Development Certificates
www.LDC.com.au

CONSULTANT

Hassell LTD ABN 24 007 711 435
Level2, Pier 8/9,23 Hickson Rd
Sydney NSW 2000 Australia
T +61 2 9101 2000
F +61 2 9101 2100
sydney@hassellstudio.com
Nominated Architects NSW:
Tony Grist 5350
Glenn Scott 6842
Ross de la Motte 7398

REFERENCE

NORTH

NOTES
1. Do not scale drawing. Written dimensions govern
2. All dimensions are in millimeters unless noted otherwise
3. All dimensions shall be verified on site before proceeding with the work. Hassell shall be notified in writing of any discrepancies.
4. This drawing must be read in conjunction with all relevant contracts, specifications and drawings

This drawing is an uncontrolled copy. Unless noted otherwise

© Copyright of this drawing is vested in Hassell Ltd.

REV	DESCRIPTION	DATE
C	TENDER ADDENDUM	18 10 2021
B	FOR TENDER	04 08 2021
A	FOR TENDER	16 08 2021

CLIENT
FRASERS PROPERTY AUSTRALIA

PROJECT
STAGE 1B STREETSCAPES
MIDTOWN IVANHOE, MACQUARIE PARK
SYDNEY, NSW 2113

STATUS
TENDER DOCUMENTATION

DRAWING TITLE
DRAWING INDEX

REVIEWED

APPROVED

DRAWING NO.
HSL_S1B_0002

SCALE @ A1

PROJECT NO.
012092

REV NO.
C

LEGEND

REFER TO 'SH_L-S1B-6001 MATERIALS & FINISHES SCHEDULE' FOR SPECIFICATIONS

SITE

DRAWING	DETAIL REF	CODE	SYMBOL	
-	-	-		IVANHOE ESTATE SITE BOUNDARY
-	-	-		STAGE 1 & 1A LOT BOUNDARY
-	-	-		IVANHOE ESTATE LOT BOUNDARIES
-	-	-		STAGE 1B EXTENT OF WORKS
-	-	-	RL 0.00	INDICATIVE RELATIVE LEVEL REFER TO CIVIL ENGINEERS DRAWINGS
-	-	-	TW 0.00 BW 0.00	INDICATIVE TOP OF WALL BOTTOM OF WALL LEVEL. REFER TO CIVIL ENGINEERS DRAWINGS
-	-	-	0.00	PROPOSED CONTOURS. REFER TO CIVIL ENGINEERS DRAWINGS

PL - SOFTWORKS

DRAWING	DETAIL REF	CODE	SYMBOL	
L-S1B_5402	03 04	PL02		PLANTING MIX 02 MAIN STREET
L-S1B_5402	03 04	PL03		PLANTING MIX 03 NEIGHBOURHOOD STREET
L-S1B_5402	02 03	PL09		PLANTING MIX 09 LYON PARK ROAD CAR PARK
L-S1B_5402	01 05	PL10		PLANTING MIX 10 SHRIMPTONS CREEK

TREES

DRAWING	DETAIL REF	CODE	SYMBOL	DESCRIPTION
L-S1B_5401	01 02	-		PROPOSED TREE 750LTR
L-S1B_5401	01 03	-		PROPOSED TREE 400LTR
L-S1B_5401	01	-		PROPOSED PALM TREE

WA - WALLS

DRAWING	DETAIL REF	CODE	SYMBOL	DESCRIPTION
-	-	WA01		GABION RETAINING WALL LOCATION: SHRIMPTONS CREEK REFER ENGINEERS DETAILS
L-S1B_5102	04	WA02		CONCRETE RETAINING WALL LOCATION: LGS CAR PARK REFER ENGINEER DETAILS

FN - FURNITURE

DRAWING	DETAIL REF	CODE	SYMBOL	
L-S1B_5201	01 02 04	FN01		SINGLE SEAT 'PRECINCT SEAT' LOCATION: PUBLIC DOMAIN
L-S1B_5201	01 03	FN02		BENCH WITH BACKREST 'PRECINCT SEAT' LOCATION: PUBLIC DOMAIN
L-S1B_5201	01 03	FN04		BENCH WITH BACKREST 'PRECINCT SEAT' LOCATION: PUBLIC DOMAIN
L-S1B_5201	05	FN05		LINEAR STONE EDGING LOCATION: MAIN & NEIGHBOURHOOD STREETS
L-S1B_5203	01	FE02		VERTICAL PALISADE FENCE/ SCREEN LOCATION: LGS CARPARK

FI - FIXTURES

DRAWING	DETAIL REF	CODE	SYMBOL	
				CAST ALUMINIUM TREE SURROUNDS LOCATION: PUBLIC DOMAIN
L-S1B_5202	01 02	FI01		
L-S1B_5201	05	FI02 A		80L BIN - GENERAL WASTE LOCATION: PUBLIC DOMAIN
L-S1B_5201	05	FI02 B		80L BIN - RECYCLING' LOCATION: PUBLIC DOMAIN
L-S1B_5202	03	FI04		ETCHED GAME
L-S1B_5202	05	FI05		ETCHED GAME
L-S1B_5202	05	FI06		ETCHED GAME
-	-	FI07		NATIVE BIRD NESTING BOX LOCATION: STREETSCAPES

PV - HARDWORKS

DRAWING	DETAIL REF	CODE	SYMBOL	
L-S1B_5301	01	PV01		GRANITE PAVING LOCATION: FOOTPATH - MAIN STREET
L-S1B_5301 L-S1B_5302	02 01	PV02		GRANITE PAVING LOCATION: NEIGHBOURHOOD STREETS
L-S1B_5301	01 02	PV03		GRANITE PAVER - HEADER LOCATION: MAIN & NEIGHBOURHOOD STREETS
L-S1B_5301	03	PV04		GRANITE PAVING - SQUARE LOCATION: MAIN & NEIGHBOURHOOD STREETS
L-S1B_5301	06	PV05		GRANITE PAVING - PARKING BAYS LOCATION: MAIN & NEIGHBOURHOOD STREETS (TRAFFICABLE)
L-S1B_5302	06	PV07		CONCRETE FOOTPATH LOCATION: SHRIMPTONS CREEK

LI - LIGHTING

DRAWING	DETAIL REF	CODE	SYMBOL	
-	-			POLE TOP STREET LIGHTING COLOUR: BLACK RAL 9004 REFER ELECTRICAL ENGINEER DOCUMENTATION FOR SPECIFICATION

These plans are referred to in certificate no. **16746** approved by:

Eric Hausfeld
Registered Certifier

Registration No: BDC 2416
Categories: Certifier – Subdivision
Certifier – Strata
Certifier – Stormwater
Certifier – Road & Drainage
Certifier – Hydraulic (stormwater)

Land Development Certificates
www.LDC.com.au

DRAWING NOTES

1. INFORMATION, OTHER THAN LANDSCAPE ARCHITECTURAL WORKS, HAS BEEN PROVIDED BY VARIOUS CONSULTANTS AND IS INCLUDED FOR INFORMATION ONLY.
2. FINAL COORDINATION OF ALL TREES, LIGHT POLES AND STREET FURNITURE LOCATIONS TO BE CONFIRMED POST TENDER FOLLOWING TRAFFIC SAFETY AUDIT
3. FINAL COORDINATION OF ALL TREES AND LOCATION OF PITS AND SERVICES TO BE CONFIRMED POST TENDER
4. PLANTING SCHEDULES ARE INDICATIVE ONLY AND SUBJECT TO REFINEMENT POST AWARD OF TENDER
5. ALL SITE LEVELS TO ADWJ DOCUMENTATION

CONSULTANT

Hassell LTD ABN 24 007 711 435
Level2, Pier 8/9,23 Hickson Rd
Sydney NSW 2000 Australia
T +61 2 9101 2000
F +61 2 9101 2100
sydney@hassellstudio.com
Nominated Architects NSW:
Tony Grist 5350
Glenn Scott 6842
Ross de la Motte 7398

REFERENCE

NORTH

NOTES
1. Do not scale drawing. Written dimensions govern
2. All dimensions are in millimeters unless noted otherwise
3. All dimensions shall be verified on site before proceeding with the work. Hassell shall be notified in writing of any discrepancies.
4. This drawing must be read in conjunction with all relevant contracts, specifications and drawings

This drawing is an uncontrolled copy. Unless noted otherwise

© Copyright of this drawing is vested in Hassell Ltd.

REV	DESCRIPTION	DATE
A	FOR TENDER	16 08 2021

CLIENT
FRASERS PROPERTY AUSTRALIA

PROJECT
STAGE 1B STREETSCAPES
MIDTOWN IVANHOE, MACQUARIE PARK
SYDNEY, NSW 2113

STATUS
TENDER DOCUMENTATION

DRAWING TITLE
DRAWING LEGEND

REVIEWED

APPROVED

DRAWING NO.
HSL_S1B_0003

SCALE @ A1

PROJECT NO.
012092

REV NO.
A

PLANTING SCHEDULE - STAGE 1B PUBLIC DOMAIN

CODE	BOTANIC NAME	COMMON NAME	POT SIZE	MIX %	QUANTITY
TREES					
Er	Elaeocarpus reticulatus 'Prima Donna'	Blueberry Ash	400ltr	-	37
Fm	Ficus microcarpa var. hilli 'Flash'	Hills Fig	750ltr	-	48
Hf	Howea forsteriana	Kentia Palm	Ex ground/ 12m(h)	-	4
			Ex ground/ 11m(h)		4
			Ex ground/ 9m(h)		4
Cf	Cercis canadensis 'Forest Pansy'	Eastern Redbud	400ltr	-	6
Wf	Waterhousia floribunda 'Amaroo'	Weeping Lily Pilly	400ltr	-	43
GROUNDCOVER MIXES					
PL 02	MAIN STREET (1221m²)				
	Lomandra hystrix 'Katie Belles'	Spiny Head Mat Rush	200mm	25	952
	Pennisetum alopecuroidea 'Nafray'	Swamp Foxtail Grass	200mm	25	952
	Liriope spicata	Lilyturf	150mm	20	1714
	Myoporum parvifolium	Creeping Boobialla	150mm	10	857
	Ophiopogon japonicus	Dwarf Turf Lily	150mm	20	2285
PL 03	NEIGHBOURHOOD STREET (594m²)				
	Lomandra longifolia 'Verday'	Spiny Head Mat Rush	200mm	25	585
	Tulbaghia violacea	Pink Agapanthis	200mm	25	585
	Liriope muscari 'Amethyst'	Lilyturf	150mm	20	1053
	Pratia pedunculata	Pratia	150mm	20	1872
	Trachelospermum asiaticum 'Flat Mat'	Chinese Star Jasmine	150mm	10	527
PL 09	LYON PARK ROAD CAR PARK (564m2)				
	Billardiera scandens	Apple Berry	200mm	15	338
	Centella asiatica	Swamp Pennywort	150mm	10	226
	Dianella caerulea 'Cassa Blue'	Native Flax Plant	200mm	15	338
	Goodenia hederacea	Violet-leaved Goodenia	150mm	10	226
	Hardenbergia violacea	False Saraparilla	200mm	15	338
	Helmholtzia glaberrima	Stream Lily	200mm	15	338
	Liriope muscari	Lily Turf	150mm	10	226
	Wahlenbergia gracilis	Australian Bluebell	150mm	10	226
PL 10	SHRIMPTONS CREEK (1039m2)				
	Callistemon hybrid 'Calkwr'	Bottlebrush	200mm	2	57
	Crowea exalta	Waxflower	200mm	8	228
	Dianella caerulea 'Casssa Blue'	Native Flax Lily	200mm	8	228
	Lamberta formosa	Mountain Devil	200mm	2	57
	Leptospermum 'Vertical Drop'	Tea tree	200mm	8	228
	Liriope muscari 'Amethyst'	Lily Turf	200mm	8	228
	Lomandra confertifolia 'Wingarra'	Mat Rush	200mm	8	228
	Lomandra confertifolia 'Katrinus'	Mat Rush	200mm	8	228
	Melaleuca 'Little Red'	Honey Myrtle	200mm	8	228
	Ozmanthus diosmifolius	Rice Flower	200mm	2	57
	Platysace lanceolata	Edna Walling Flower Girl	200mm	8	228
	Pennisetum alopecuroides 'Nafray'	Swamp Grass	200mm	8	228
	Poa labillardierei	Tussock Grass	200mm	8	228
	Russelia equisetiformis	Firecracker Plant	200mm	2	57
	Sarcococca confusa	Sweet Box	200mm	2	57
	Scaevola humilis 'Purple Fusion'	Fan Flower	200mm	8	57

C PLANT QUANTITIES REDUCED

C PLANT QUANTITIES REDUCED

These plans are referred to in certificate no. **16746** approved by:

Eric Hausfeld
Registered Certifier

Registration No: BDC 2416

Categories: Certifier – Subdivision
Certifier – Strata
Certifier – Stormwater
Certifier – Road & Drainage
Certifier – Hydraulic (stormwater)

Land Development Certificates
www.LDC.com.au

CONSULTANT

Hassell LTD ABN 24 007 711 435
Level2, Pier 8/9,23 Hickson Rd
Sydney NSW 2000 Australia
T +61 2 9101 2000
F +61 2 9101 2100
sydney@hassellstudio.com
Nominated Architects NSW:
Tony Grist 5350
Glenn Scott 6842
Ross de la Motte 7398

REFERENCE

NORTH

NOTES
1. Do not scale drawing. Written dimensions govern
2. All dimensions are in millimeters unless noted otherwise
3. All dimensions shall be verified on site before proceeding with the work. Hassell shall be notified in writing of any discrepancies.
4. This drawing must be read in conjunction with all relevant contracts, specifications and drawings

This drawing is an uncontrolled copy. Unless noted otherwise

© Copyright of this drawing is vested in Hassell Ltd.

REV	DESCRIPTION	DATE
C	TENDER ADDENDUM	18 10 2021
B	FOR TENDER	24 08 2021
A	FOR TENDER	16 08 2021

CLIENT
FRASERS PROPERTY AUSTRALIA

PROJECT
STAGE 1B STREETSCAPES
MIDTOWN IVANHOE, MACQUARIE PARK
SYDNEY, NSW 2113

STATUS
TENDER DOCUMENTATION

DRAWING TITLE
PLANTING SCHEDULE

REVIEWED

APPROVED

DRAWING NO.
HSL_S1B_0004

SCALE @ A1

PROJECT NO.
012092

REV NO.
C

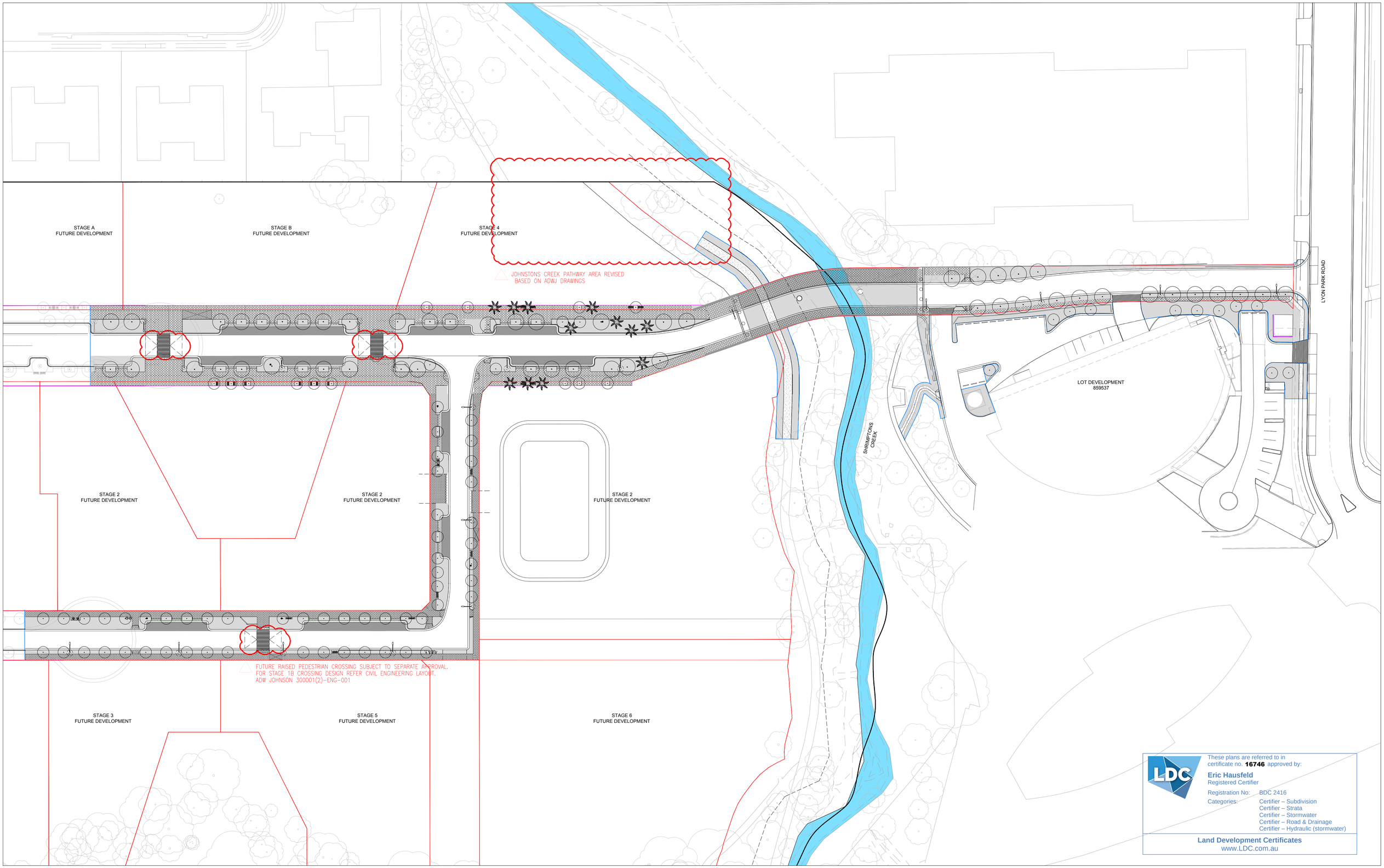

These plans are referred to in
certificate no. **16746** approved by:

Eric Hausfeld
Registered Certifier

Registration No: BDC 2416

Categories: Certifier – Subdivision
Certifier – Strata
Certifier – Stormwater
Certifier – Road & Drainage
Certifier – Hydraulic (stormwater)

Land Development Certificates
www.LDC.com.au

CONSULTANT

Hassell LTD ABN 24 007 711 435
Level2, Pier 8/9,23 Hickson Rd
Sydney NSW 2000 Australia
T +61 2 9101 2000
F +61 2 9101 2100
sydney@hassellstudio.com
Nominated Architects NSW:
Tony Grist 5350
Glenn Scott 6842
Ross de la Motte 7398

REFERENCE

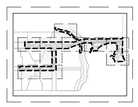

NORTH

NOTES

1. Do not scale drawing. Written dimensions govern
2. All dimensions are in millimeters unless noted otherwise
3. All dimensions shall be verified on site before proceeding with the work. Hassell shall be notified in writing of any discrepancies.
4. This drawing must be read in conjunction with all relevant contracts, specifications and drawings

This drawing is an uncontrolled copy. Unless noted otherwise

© Copyright of this drawing is vested in Hassell Ltd.

REV	DESCRIPTION	DATE
C	TENDER ADDENDUM	18 10 2021
B	FOR TENDER	24 08 2021
A	FOR TENDER	16 08 2021

CLIENT
FRASERS PROPERTY AUSTRALIA

PROJECT
STAGE 1B STREETSCAPES
MIDTOWN IVANHOE, MACQUARIE PARK
SYDNEY, NSW 2113

STATUS
TENDER DOCUMENTATION

DRAWING TITLE
SITE PLAN

REVIEWED

APPROVED

DRAWING NO.
HSL_S1B_0100

SCALE @ A1

PROJECT NO.
012092

REV NO.
C

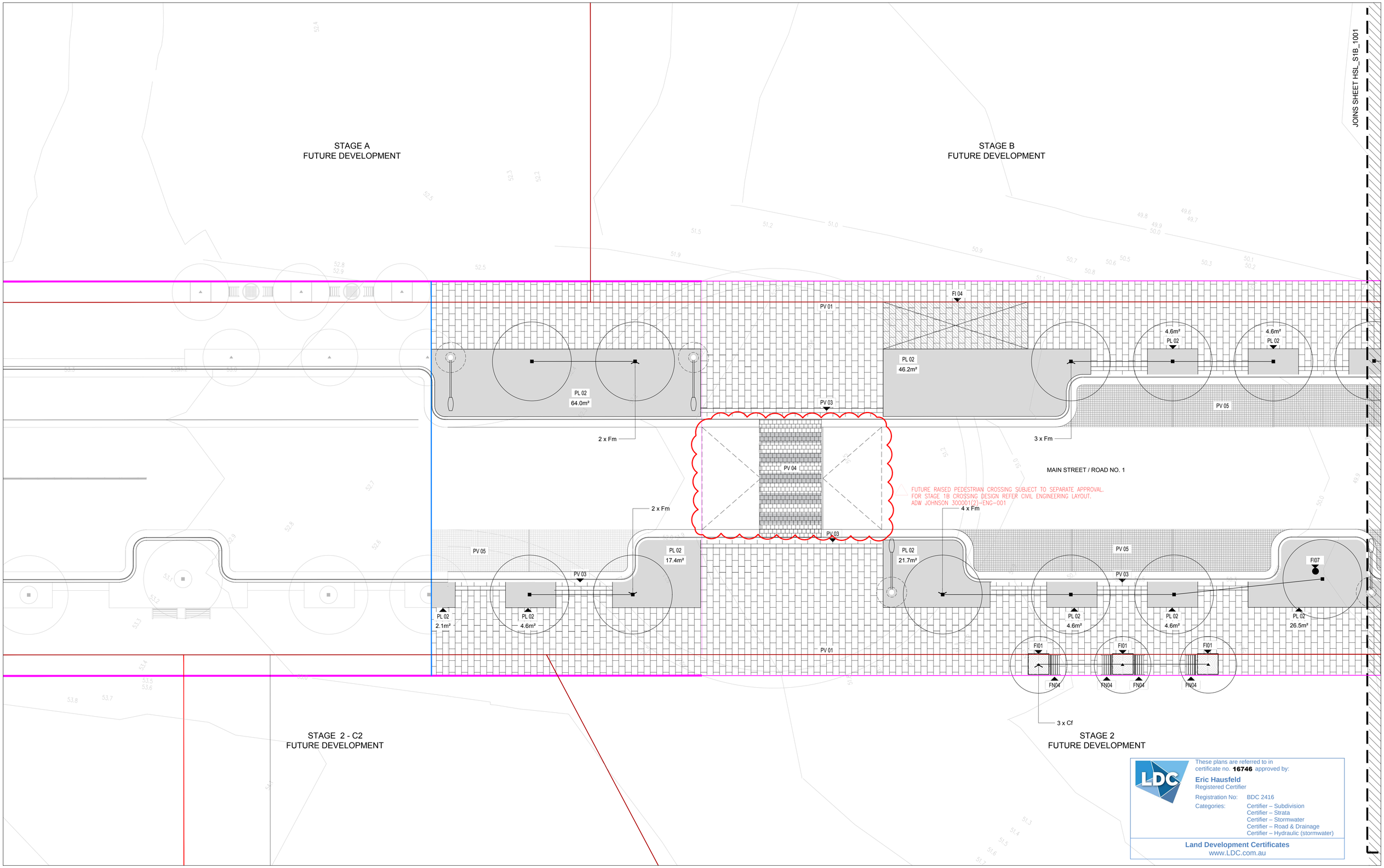

These plans are referred to in certificate no. **16746** approved by:

Eric Hausfeld
Registered Certifier

Registration No: BDC 2416

Categories: Certifier – Subdivision
Certifier – Strata
Certifier – Stormwater
Certifier – Road & Drainage
Certifier – Hydraulic (stormwater)

Land Development Certificates
www.LDC.com.au

CONSULTANT

Hassell LTD ABN 24 007 711 435
Level2, Pier 8/9,23 Hickson Rd
Sydney NSW 2000 Australia
T +61 2 9101 2000
F +61 2 9101 2100
sydney@hasselstudio.com
Nominated Architects NSW:
Tony Grist 5350
Glenn Scott 6842
Ross de la Motte 7398

REFERENCE

NORTH

NOTES

1. Do not scale drawing. Written dimensions govern
2. All dimensions are in millimeters unless noted otherwise
3. All dimensions shall be verified on site before proceeding with the work. Hassell shall be notified in writing of any discrepancies.
4. This drawing must be read in conjunction with all relevant contracts, specifications and drawings

This drawing is an uncontrolled copy. Unless noted otherwise

© Copyright of this drawing is vested in Hassell Ltd.

REV	DESCRIPTION	DATE
A	FOR TENDER	16 08 2021

CLIENT
FRASERS PROPERTY AUSTRALIA

PROJECT
STAGE 1B STREETSCAPES
MIDTOWN IVANHOE, MACQUARIE PARK
SYDNEY, NSW 2113

STATUS
TENDER DOCUMENTATION

DRAWING TITLE
GENERAL ARRANGEMENT

REVIEWED

APPROVED

DRAWING NO.
HSL_S1B_1001

SCALE @ A1

PROJECT NO.
012092

REV NO.
A

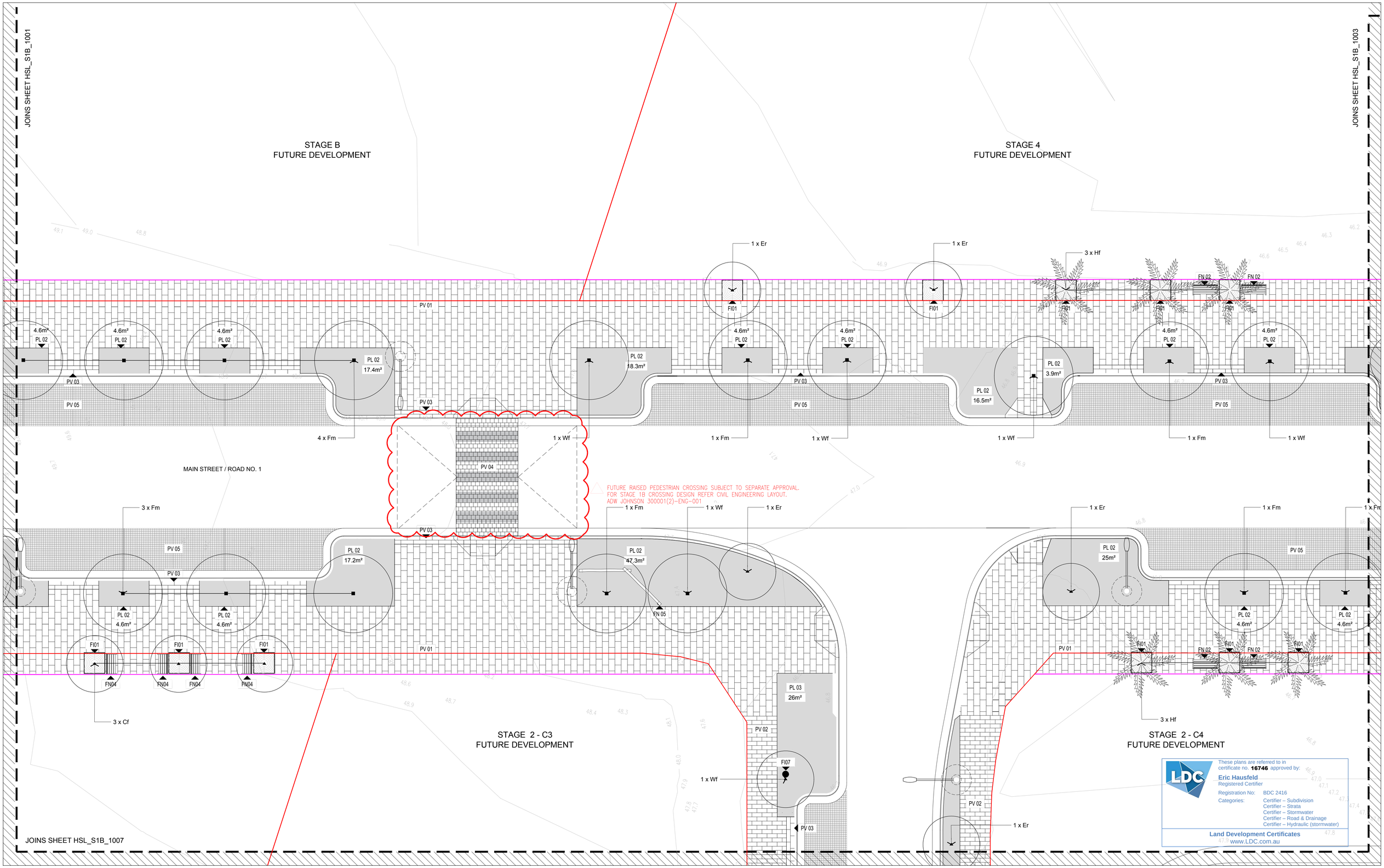

CONSULTANT

Hassell LTD ABN 24 007 711 435
Level2, Pier 8/9,23 Hickson Rd
Sydney NSW 2000 Australia
T +61 2 9101 2000
F +61 2 9101 2100
sydney@hassellstudio.com
Nominated Architects NSW:
Tony Grist 5350
Glenn Scott 6842
Ross de la Motte 7398

REFERENCE

NORTH

NOTES

1. Do not scale drawing. Written dimensions govern
2. All dimensions are in millimeters unless noted otherwise
3. All dimensions shall be verified on site before proceeding with the work. Hassell shall be notified in writing of any discrepancies.
4. This drawing must be read in conjunction with all relevant contracts, specifications and drawings

This drawing is an uncontrolled copy. Unless noted otherwise

© Copyright of this drawing is vested in Hassell Ltd.

REV	DESCRIPTION	DATE
A	FOR TENDER	16 08 2021

CLIENT
FRASERS PROPERTY AUSTRALIA

PROJECT
STAGE 1B STREETSCAPES
MIDTOWN IVANHOE, MACQUARIE PARK
SYDNEY, NSW 2113

STATUS
TENDER DOCUMENTATION

DRAWING TITLE
GENERAL ARRANGEMENT

REVIEWED

APPROVED

SCALE @ A1

PROJECT NO.
012092

DRAWING NO.
HSL_S1B_1002

REV NO.
A

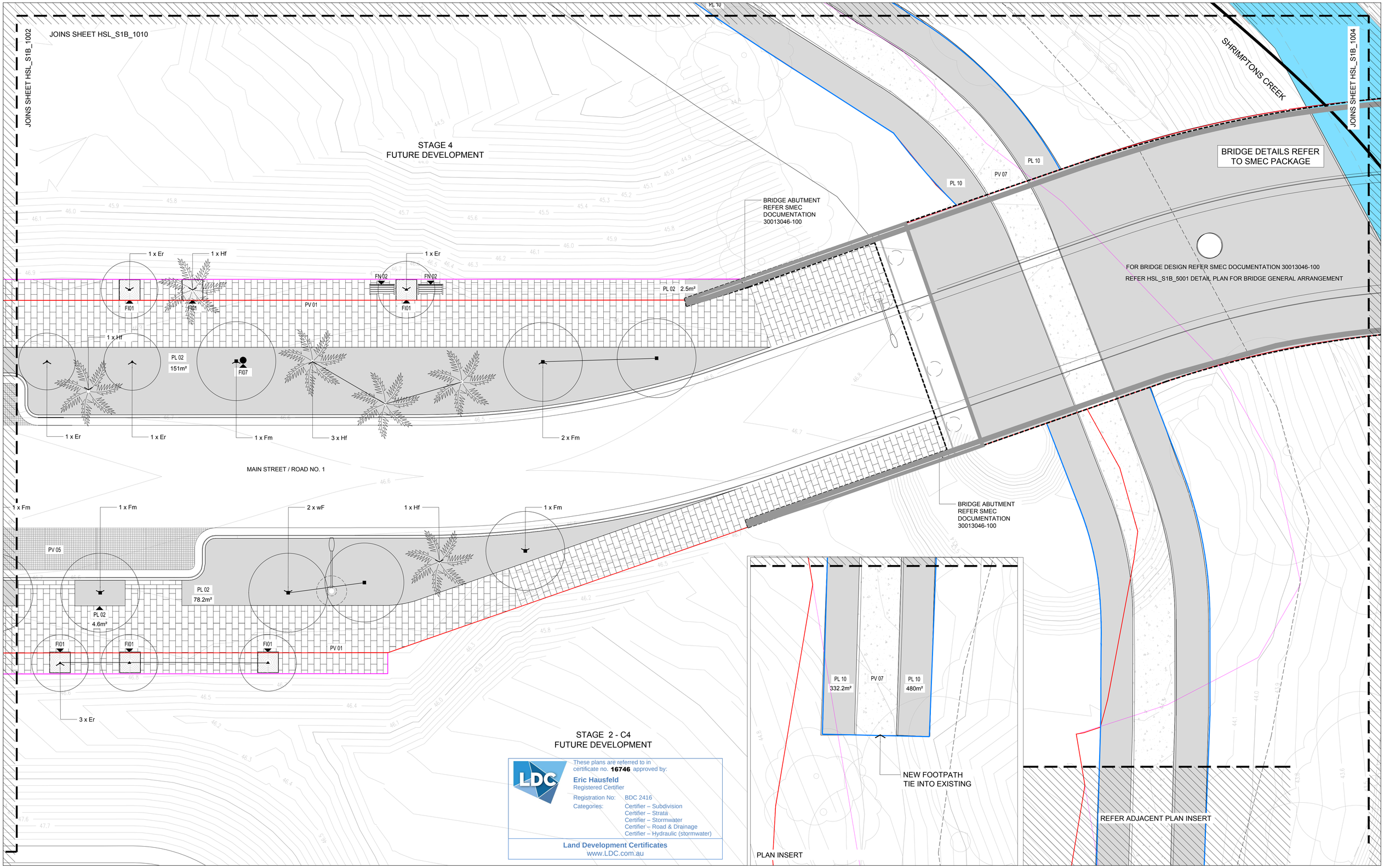

These plans are referred to in certificate no. **16746** approved by:

Eric Hausfeld
Registered Certifier

Registration No: BDC 2416
Categories: Certifier – Subdivision
Certifier – Strata
Certifier – Stormwater
Certifier – Road & Drainage
Certifier – Hydraulic (stormwater)

Land Development Certificates
www.LDC.com.au

CONSULTANT

Hassell LTD ABN 24 007 711 435
Level2, Pier 8/9,23 Hickson Rd
Sydney NSW 2000 Australia
T +61 2 9101 2000
F +61 2 9101 2100
sydney@hassellstudio.com
Nominated Architects NSW:
Tony Grist 5350
Glenn Scott 6842
Ross de la Motte 7398

REFERENCE

NORTH

NOTES

1. Do not scale drawing. Written dimensions govern
2. All dimensions are in millimeters unless noted otherwise
3. All dimensions shall be verified on site before proceeding with the work. Hassell shall be notified in writing of any discrepancies.
4. This drawing must be read in conjunction with all relevant contracts, specifications and drawings

This drawing is an uncontrolled copy. Unless noted otherwise

© Copyright of this drawing is vested in Hassell Ltd.

REV	DESCRIPTION	DATE
B	TENDER ADDENDUM	18 10 2021
A	FOR TENDER	16 08 2021

CLIENT
FRASERS PROPERTY AUSTRALIA

PROJECT
STAGE 1B STREETSCAPES
MIDTOWN IVANHOE, MACQUARIE PARK
SYDNEY, NSW 2113

STATUS
TENDER DOCUMENTATION

DRAWING TITLE
GENERAL ARRANGEMENT

REVIEWED

APPROVED

DRAWING NO.
HSL_S1B_1003

SCALE @ A1

PROJECT NO.
012092

REV NO.
B

PRINT INFORMATION_ PRINTED BY: Chloe Walsh _ ON: 2021/10/18 _ USING PAGESETUP: --- _ USING PLOTSTYLE TABLE: halfweight.ctb _ PC3: DWG To PDF.pc3 _ PSLTSCALE: 1 _ LTSCALE: 1.000000

FILENAME \\syd-p-fs-06\fs045\012092-61a-p\Working\AutoCAD\10_td_stage01b\Sheet\HSL_S1B_1003 GENERAL ARRANGEMENT.dwg

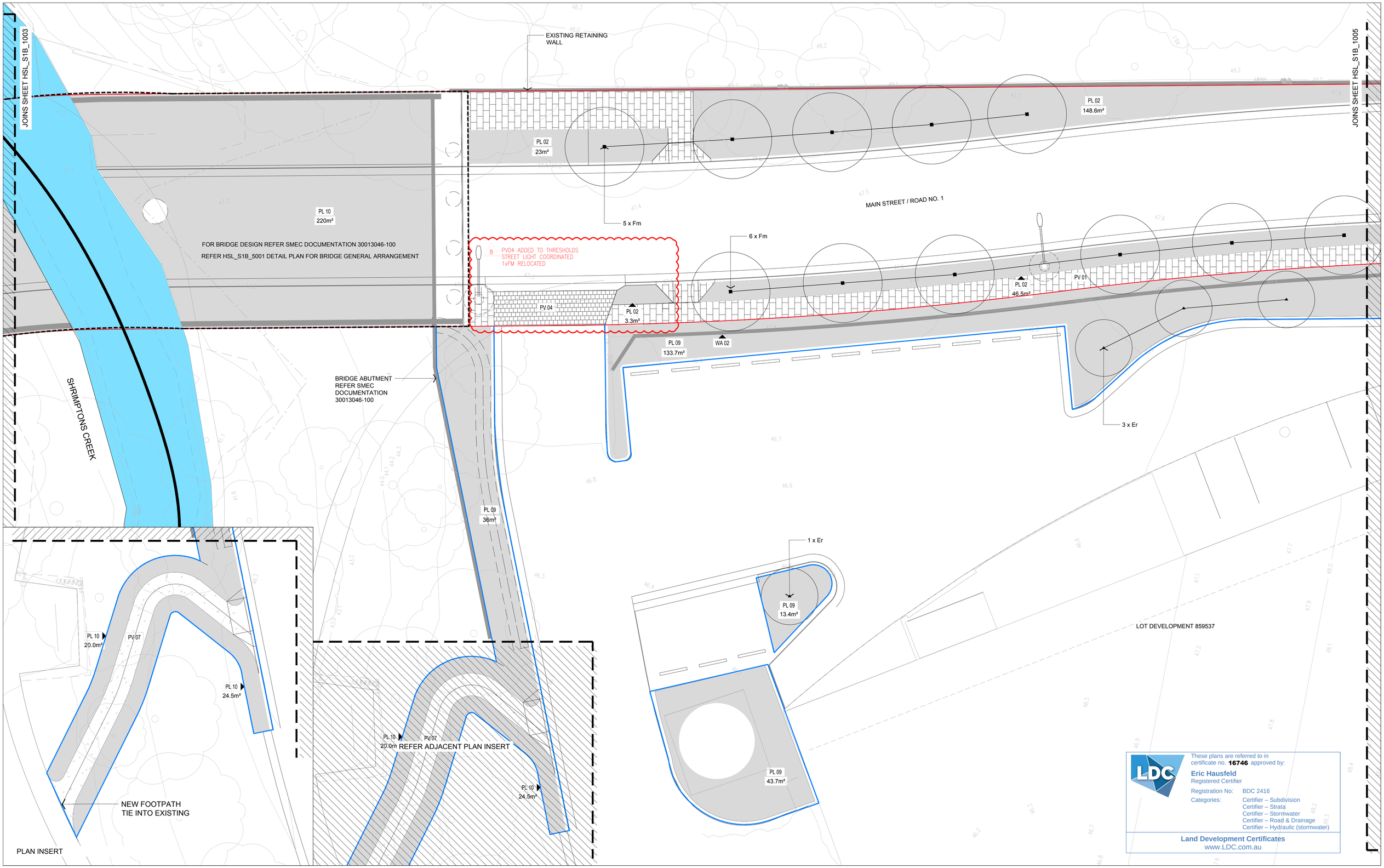

These plans are referred to in certificate no. **16746** approved by:

Eric Hausfeld
Registered Certifier

Registration No: BDC 2416

Categories: Certifier – Subdivision
Certifier – Strata
Certifier – Stormwater
Certifier – Road & Drainage
Certifier – Hydraulic (stormwater)

Land Development Certificates
www.LDC.com.au

CONSULTANT

Hassell LTD ABN 24 007 711 435
Level2, Pier 8/9,23 Hickson Rd
Sydney NSW 2000 Australia
T +61 2 9101 2000
F +61 2 9101 2100
sydney@hassellstudio.com
Nominated Architects NSW:
Tony Grist 5350
Glenn Scott 6842
Ross de la Motte 7398

REFERENCE

NORTH

NOTES

1. Do not scale drawing. Written dimensions govern
2. All dimensions are in millimeters unless noted otherwise
3. All dimensions shall be verified on site before proceeding with the work. Hassell shall be notified in writing of any discrepancies.
4. This drawing must be read in conjunction with all relevant contracts, specifications and drawings

This drawing is an uncontrolled copy. Unless noted otherwise

© Copyright of this drawing is vested in Hassell Ltd.

REV	DESCRIPTION	DATE
B	FOR TENDER	24 08 2024
A	FOR TENDER	16 08 2021

CLIENT
FRASERS PROPERTY AUSTRALIA

PROJECT
STAGE 1B STREETSCAPES
MIDTOWN IVANHOE, MACQUARIE PARK
SYDNEY, NSW 2113

STATUS
TENDER DOCUMENTATION

DRAWING TITLE
GENERAL ARRANGEMENT

REVIEWED

SCALE @ A1

APPROVED

PROJECT NO.
012092

DRAWING NO.
HSL_S1B_1004

REV NO.
B

PRINT INFORMATION_ PRINTED BY: Georgia Darling _ ON: 2021/08/24 _ USING PAGESETUP: ---- _ USING PLOTSTYLE TABLE: halfweight.ctb _ PC3: DWG To PDF.pc3 _ PSLTSCALE: 1 _ LTSCALE: 1.000000

FILENAME \\aydproj\hs03\012092-61A-PI\Working\AutoCAD\10_TD_Stage01B\Sheet\HSL_S1B_1004 GENERAL ARRANGEMENT.dwg

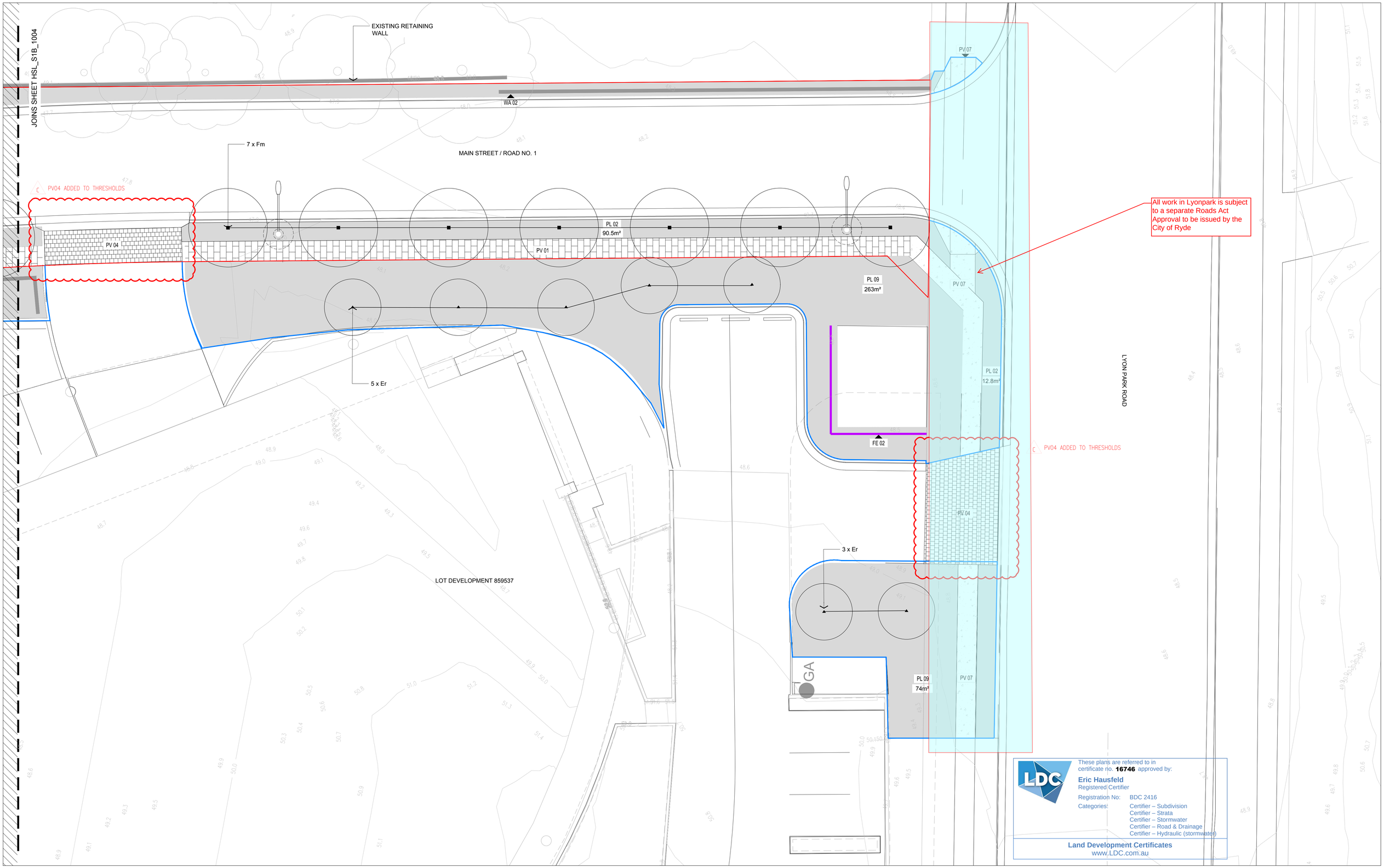

CONSULTANT

Hassell LTD ABN 24 007 711 435
Level2, Pier 8/9,23 Hickson Rd
Sydney NSW 2000 Australia
T +61 2 9101 2000
F +61 2 9101 2100
sydney@hassellstudio.com
Nominated Architects NSW:
Tony Grist 5350
Glenn Scott 6842
Ross de la Motte 7398

REFERENCE

NORTH

NOTES

1. Do not scale drawing. Written dimensions govern
2. All dimensions are in millimeters unless noted otherwise
3. All dimensions shall be verified on site before proceeding with the work. Hassell shall be notified in writing of any discrepancies.
4. This drawing must be read in conjunction with all relevant contracts, specifications and drawings

This drawing is an uncontrolled copy. Unless noted otherwise

© Copyright of this drawing is vested in Hassell Ltd.

REV	DESCRIPTION	DATE
C	FOR TENDER	24 08 2021
B	FOR TENDER	17 08 2021
A	FOR TENDER	16 08 2021

CLIENT
FRASERS PROPERTY AUSTRALIA

PROJECT
STAGE 1B STREETSCAPES
MIDTOWN IVANHOE, MACQUARIE PARK
SYDNEY, NSW 2113

STATUS
TENDER DOCUMENTATION

DRAWING TITLE
GENERAL ARRANGEMENT

REVIEWED

APPROVED

DRAWING NO.
HSL_S1B_1005

SCALE @ A1

PROJECT NO.
012092

REV NO.
C

JOINS SHEET HSL_S1B_1005

LOT DEVELOPMENT 859537

PL 09
130.1m²

PL 09
70.4m²

PL 09
105.5m²

PL 09
176m²

These plans are referred to in certificate no. **16746** approved by:

Eric Hausfeld
Registered Certifier

Registration No: BDC 2416

Categories: Certifier – Subdivision
Certifier – Strata
Certifier – Stormwater
Certifier – Road & Drainage
Certifier – Hydraulic (stormwater)

Land Development Certificates
www.LDC.com.au

CONSULTANT

Hassell LTD ABN 24 007 711 435
Level2, Pier 8/9,23 Hickson Rd
Sydney NSW 2000 Australia
T +61 2 9101 2000
F +61 2 9101 2100
sydney@hassellstudio.com
Nominated Architects NSW:
Tony Grist 5350
Glenn Scott 6842
Ross de la Motte 7398

REFERENCE

NORTH

NOTES

1. Do not scale drawing. Written dimensions govern
2. All dimensions are in millimeters unless noted otherwise
3. All dimensions shall be verified on site before proceeding with the work. Hassell shall be notified in writing of any discrepancies.
4. This drawing must be read in conjunction with all relevant contracts, specifications and drawings

This drawing is an uncontrolled copy. Unless noted otherwise

© Copyright of this drawing is vested in Hassell Ltd.

REV	DESCRIPTION	DATE
A	FOR TENDER	16 08 2021

CLIENT
FRASERS PROPERTY AUSTRALIA

PROJECT
STAGE 1B STREETSCAPES
MIDTOWN IVANHOE, MACQUARIE PARK
SYDNEY, NSW 2113

STATUS
TENDER DOCUMENTATION

DRAWING TITLE
GENERAL ARRANGEMENT

REVIEWED

APPROVED

DRAWING NO.
HSL_S1B_1006

SCALE @ A1

PROJECT NO.
012092

REV NO.
A

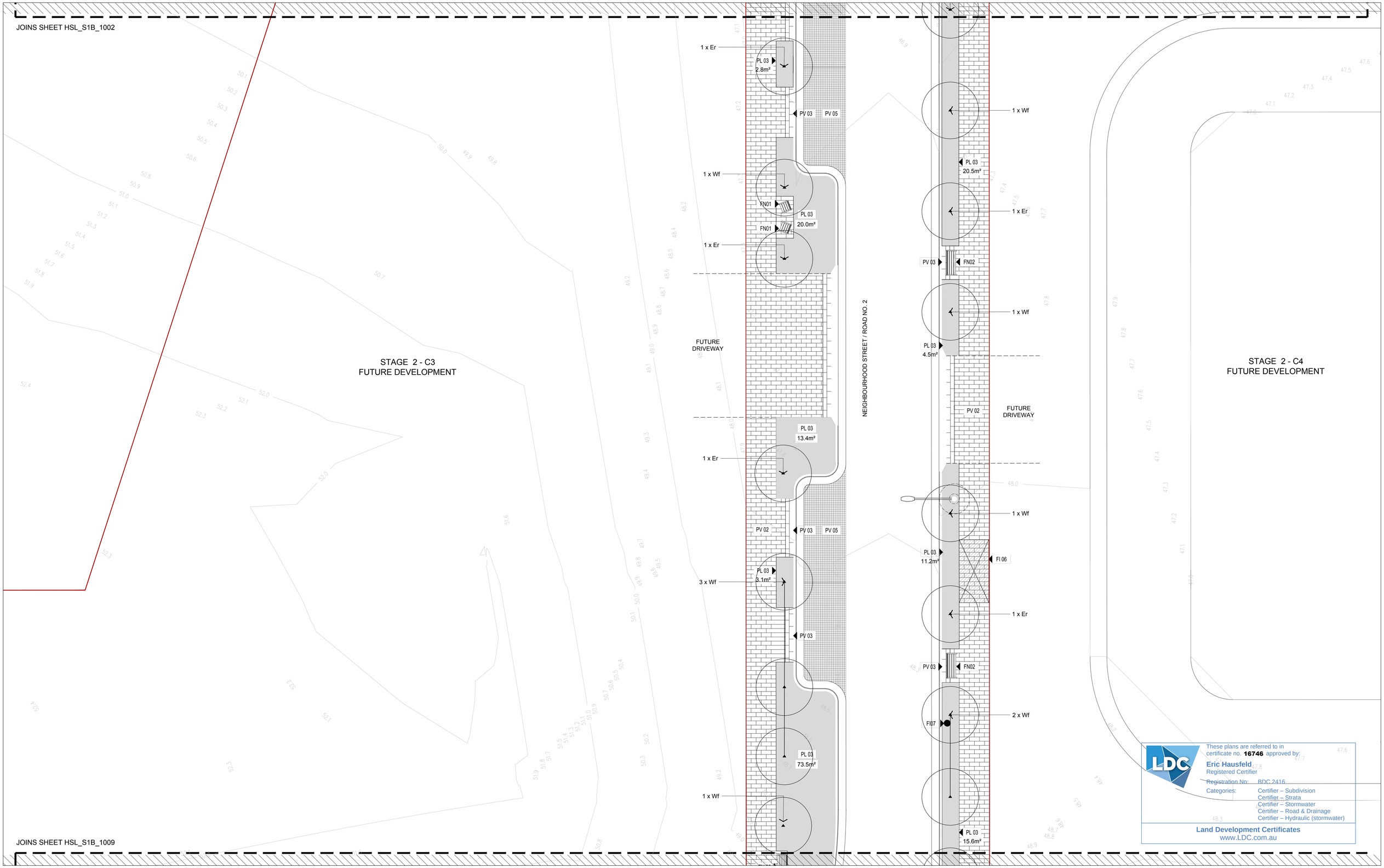

These plans are referred to in certificate no. **16746** approved by:
Eric Hausfeld
Registered Certifier
Registration No: BDC 2416
Categories: Certifier – Subdivision
Certifier – Strata
Certifier – Stormwater
Certifier – Road & Drainage
Certifier – Hydraulic (stormwater)

Land Development Certificates
www.LDC.com.au

CONSULTANT

Hassell LTD ABN 24 007 711 435
Level2, Pier 8/9,23 Hickson Rd
Sydney NSW 2000 Australia
T +61 2 9101 2000
F +61 2 9101 2100
sydney@hassellstudio.com
Nominated Architects NSW:
Tony Grist 5350
Glenn Scott 6842
Ross de la Motte 7398

REFERENCE

NORTH

NOTES

1. Do not scale drawing. Written dimensions govern
2. All dimensions are in millimeters unless noted otherwise
3. All dimensions shall be verified on site before proceeding with the work. Hassell shall be notified in writing of any discrepancies.
4. This drawing must be read in conjunction with all relevant contracts, specifications and drawings

This drawing is an uncontrolled copy. Unless noted otherwise

© Copyright of this drawing is vested in Hassell Ltd.

REV	DESCRIPTION	DATE
A	FOR TENDER	16 08 2021

CLIENT
FRASERS PROPERTY AUSTRALIA

PROJECT
STAGE 1B STREETSCAPES
MIDTOWN IVANHOE, MACQUARIE PARK
SYDNEY, NSW 2113

STATUS
TENDER DOCUMENTATION

DRAWING TITLE
GENERAL ARRANGEMENT

REVIEWED

APPROVED

DRAWING NO.
HSL_S1B_1007

SCALE @ A1

PROJECT NO.
012092

REV NO.
A

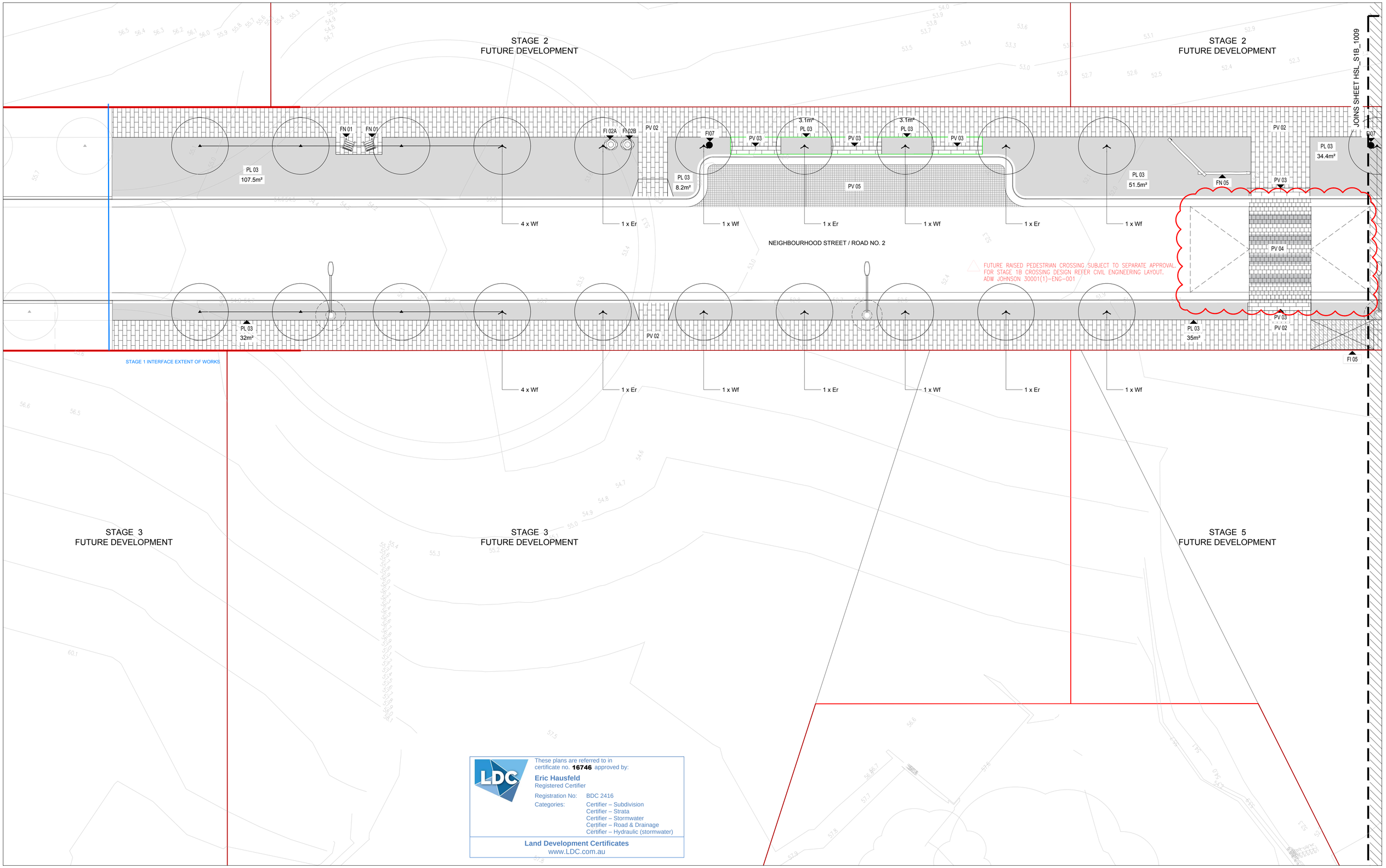

These plans are referred to in certificate no. **16746** approved by:

Eric Hausfeld
Registered Certifier

Registration No: BDC 2416
Categories: Certifier – Subdivision
Certifier – Strata
Certifier – Stormwater
Certifier – Road & Drainage
Certifier – Hydraulic (stormwater)

Land Development Certificates
www.LDC.com.au

CONSULTANT

Hassell LTD ABN 24 007 711 435
Level2, Pier 8/9,23 Hickson Rd
Sydney NSW 2000 Australia
T +61 2 9101 2000
F +61 2 9101 2100
sydney@hassellstudio.com
Nominated Architects NSW:
Tony Grist 5350
Glenn Scott 6842
Ross de la Motte 7398

REFERENCE

NORTH

NOTES

1. Do not scale drawing. Written dimensions govern
2. All dimensions are in millimeters unless noted otherwise
3. All dimensions shall be verified on site before proceeding with the work. Hassell shall be notified in writing of any discrepancies.
4. This drawing must be read in conjunction with all relevant contracts, specifications and drawings

This drawing is an uncontrolled copy. Unless noted otherwise

© Copyright of this drawing is vested in Hassell Ltd.

REV	DESCRIPTION	DATE
A	FOR TENDER	16 08 2021

CLIENT
FRASERS PROPERTY AUSTRALIA

PROJECT
STAGE 1B STREETSCAPES
MIDTOWN IVANHOE, MACQUARIE PARK
SYDNEY, NSW 2113

STATUS
TENDER DOCUMENTATION

DRAWING TITLE
GENERAL ARRANGEMENT

REVIEWED

APPROVED

SCALE @ A1

PROJECT NO.
012092

DRAWING NO.
HSL_S1B_1008

REV NO.
A

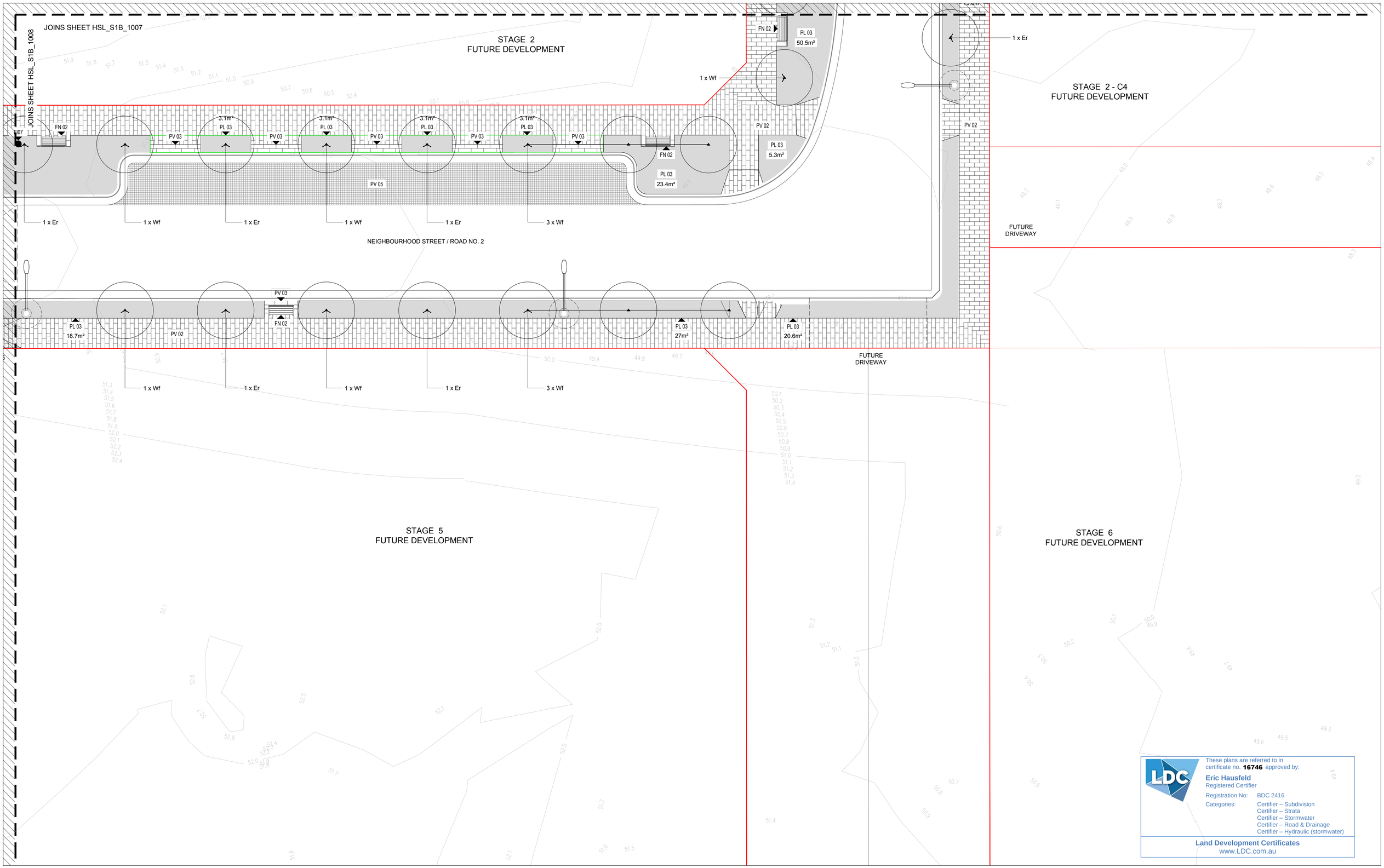

These plans are referred to in certificate no. **16746** approved by:

Eric Hausfeld
Registered Certifier

Registration No: BDC 2416

Categories:
Certifier – Subdivision
Certifier – Strata
Certifier – Stormwater
Certifier – Road & Drainage
Certifier – Hydraulic (stormwater)

Land Development Certificates
www.LDC.com.au

CONSULTANT

Hassell LTD ABN 24 007 711 435
Level2, Pier 8/9,23 Hickson Rd
Sydney NSW 2000 Australia
T +61 2 9101 2000
F +61 2 9101 2100
sydney@hassellstudio.com
Nominated Architects NSW:
Tony Grist 5350
Glenn Scott 6842
Ross de la Motte 7398

REFERENCE

NORTH

NOTES
1. Do not scale drawing. Written dimensions govern
2. All dimensions are in millimeters unless noted otherwise
3. All dimensions shall be verified on site before proceeding with the work. Hassell shall be notified in writing of any discrepancies.
4. This drawing must be read in conjunction with all relevant contracts, specifications and drawings

This drawing is an uncontrolled copy. Unless noted otherwise

© Copyright of this drawing is vested in Hassell Ltd.

REV	DESCRIPTION	DATE
A	FOR TENDER	16 08 2021

CLIENT
FRASERS PROPERTY AUSTRALIA

PROJECT
STAGE 1B STREETSCAPES
MIDTOWN IVANHOE, MACQUARIE PARK
SYDNEY, NSW 2113

STATUS
TENDER DOCUMENTATION

DRAWING TITLE
GENERAL ARRANGEMENT

REVIEWED

APPROVED

DRAWING NO.
HSL_S1B_1009

SCALE @ A1

PROJECT NO.
012092

REV NO.
A

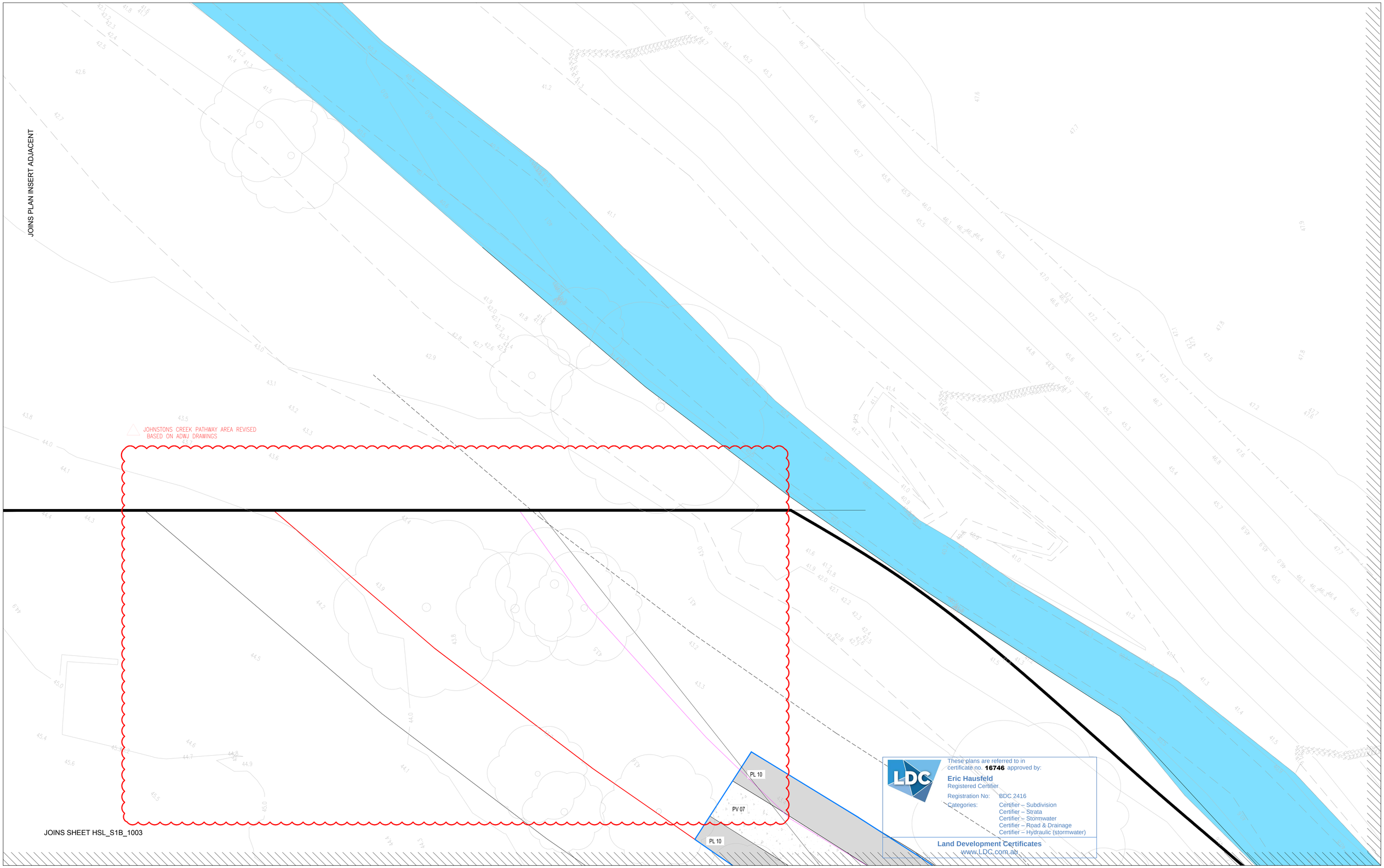

These plans are referred to in certificate no. **16746** approved by:

Eric Hausfeld
Registered Certifier

Registration No: BDC 2416

Categories:
Certifier – Subdivision
Certifier – Strata
Certifier – Stormwater
Certifier – Road & Drainage
Certifier – Hydraulic (stormwater)

Land Development Certificates
www.LDC.com.au

CONSULTANT

Hassell LTD ABN 24 007 711 435
Level2, Pier 8/9,23 Hickson Rd
Sydney NSW 2000 Australia
T +61 2 9101 2000
F +61 2 9101 2100
sydney@hassellstudio.com
Nominated Architects NSW:
Tony Grist 5350
Glenn Scott 6842
Ross de la Motte 7398

REFERENCE

NORTH

NOTES

1. Do not scale drawing. Written dimensions govern
2. All dimensions are in millimeters unless noted otherwise
3. All dimensions shall be verified on site before proceeding with the work. Hassell shall be notified in writing of any discrepancies.
4. This drawing must be read in conjunction with all relevant contracts, specifications and drawings

This drawing is an uncontrolled copy. Unless noted otherwise

© Copyright of this drawing is vested in Hassell Ltd.

REV	DESCRIPTION	DATE
B	TENDER ADDENDUM	18 10 2021
A	FOR TENDER	16 08 2021

CLIENT
FRASERS PROPERTY AUSTRALIA

PROJECT
STAGE 1B STREETSCAPES
MIDTOWN IVANHOE, MACQUARIE PARK
SYDNEY, NSW 2113

STATUS
TENDER DOCUMENTATION

DRAWING TITLE
GENERAL ARRANGEMENT

REVIEWED

APPROVED

DRAWING NO.
HSL_S1B_1010

SCALE @ A1

PROJECT NO.
012092

REV NO.
B

PRINT INFORMATION_ PRINTED BY: Chloe Walsh _ ON: 2021/10/18 _ USING PAGESETUP: --- _ USING PLOTSTYLE TABLE: halfweight.ctb _ PC3: DWG To PDF.pc3 _ PSLTSCALE: 1 _ LTSCALE: 1.000000

FILENAME \\syd-p-fs-06\fs04\012092-61a-p\Working\AutoCAD\10_ld_stage01b\Sheet\HSL_S1B_1010 GENERAL ARRANGEMENT.dwg

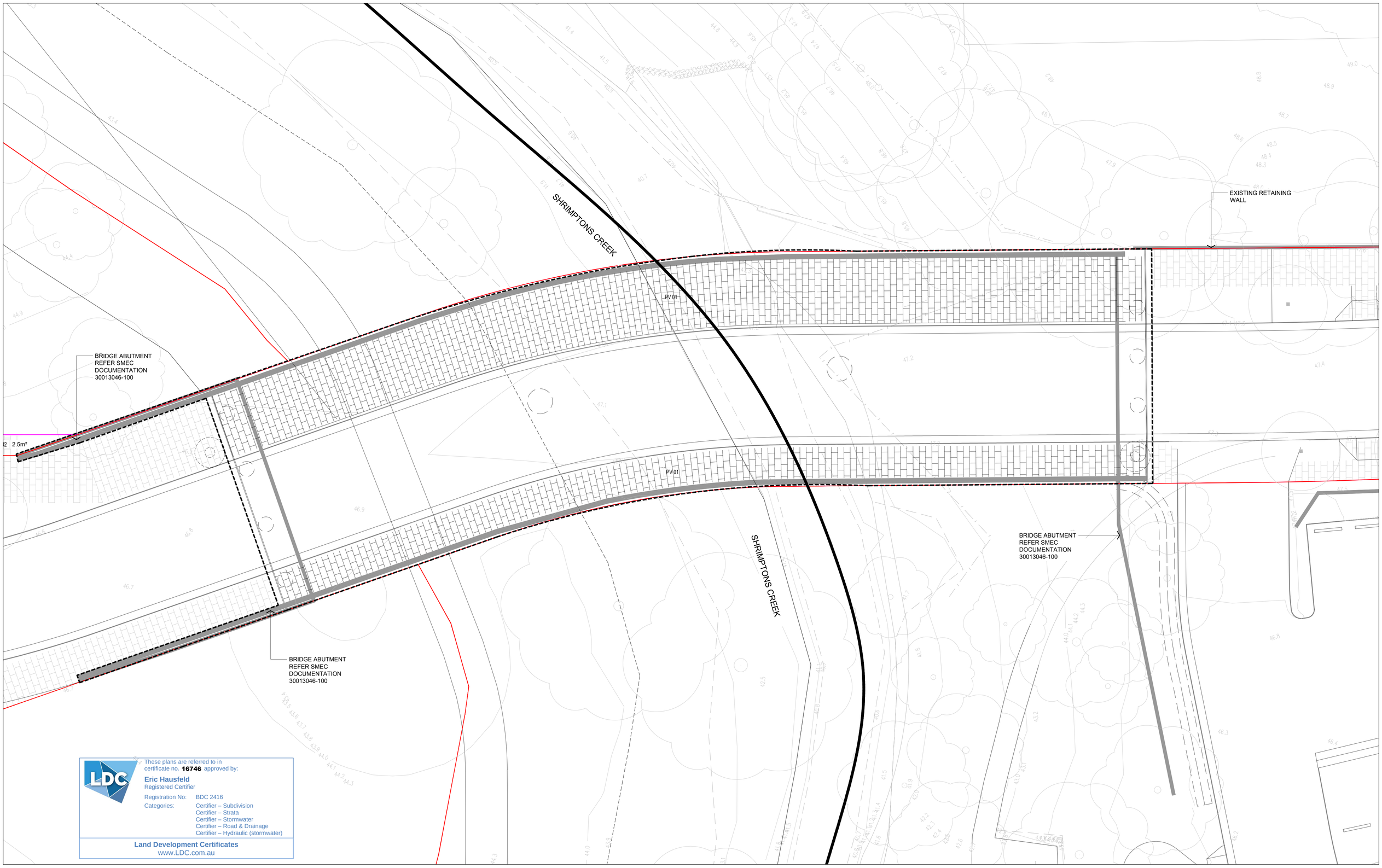

These plans are referred to in certificate no. **16746** approved by:

Eric Hausfeld
Registered Certifier

Registration No: BDC 2416

Categories:
Certifier – Subdivision
Certifier – Strata
Certifier – Stormwater
Certifier – Road & Drainage
Certifier – Hydraulic (stormwater)

Land Development Certificates
www.LDC.com.au

CONSULTANT

Hassell LTD ABN 24 007 711 435
Level2, Pier 8/9,23 Hickson Rd
Sydney NSW 2000 Australia
T +61 2 9101 2000
F +61 2 9101 2100
sydney@hassellstudio.com
Nominated Architects NSW:
Tony Grist 5350
Glenn Scott 6842
Ross de la Motte 7398

REFERENCE

NORTH

NOTES

1. Do not scale drawing. Written dimensions govern
2. All dimensions are in millimeters unless noted otherwise
3. All dimensions shall be verified on site before proceeding with the work. Hassell shall be notified in writing of any discrepancies.
4. This drawing must be read in conjunction with all relevant contracts, specifications and drawings

This drawing is an uncontrolled copy. Unless noted otherwise

© Copyright of this drawing is vested in Hassell Ltd.

REV	DESCRIPTION	DATE
A	FOR TENDER	16 08 2021

CLIENT
FRASERS PROPERTY AUSTRALIA

PROJECT
STAGE 1B STREETSCAPES
MIDTOWN IVANHOE, MACQUARIE PARK
SYDNEY, NSW 2113

STATUS
TENDER DOCUMENTATION

DRAWING TITLE
DETAIL PLAN - SHRIMPTONS CREEK BRIDGE

REVIEWED

APPROVED

DRAWING NO.
HSL_S1B_5001

SCALE @ A1

PROJECT NO.
012092

REV NO.
A

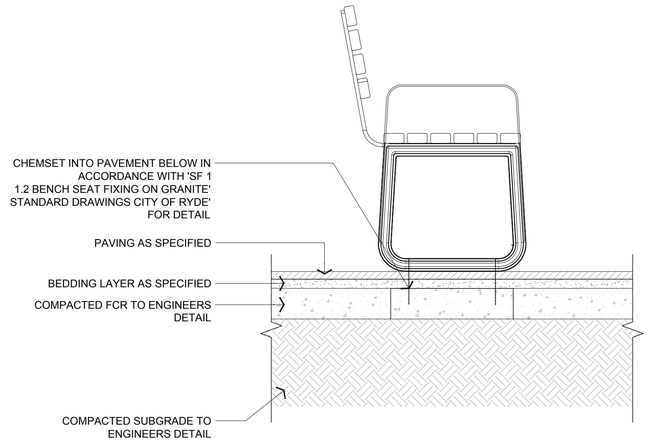

01 FN01/02 - SEAT ON STONE PAVING

ELEVATION - Scale: 1:10@A1

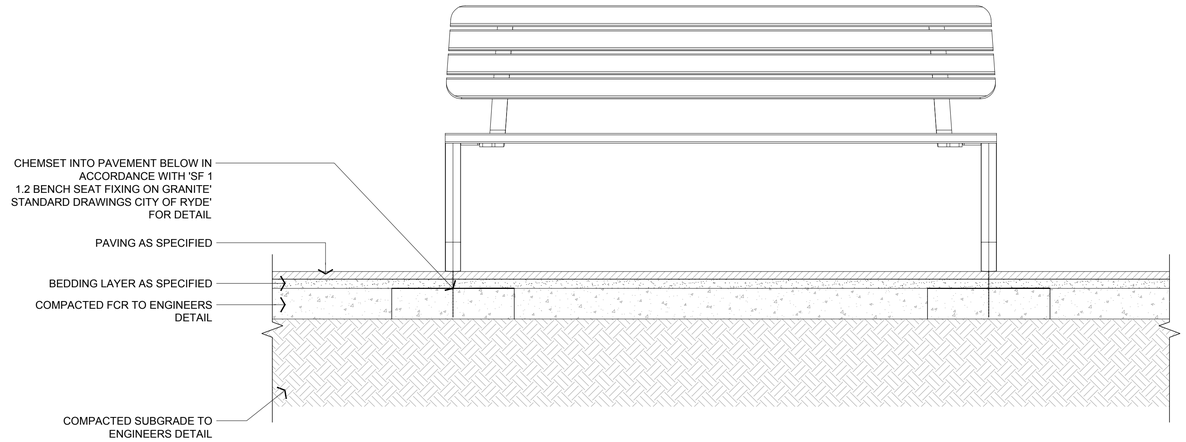

03 FN02 - BENCH ON STONE PAVING

SECTION - Scale: 1:10@A1

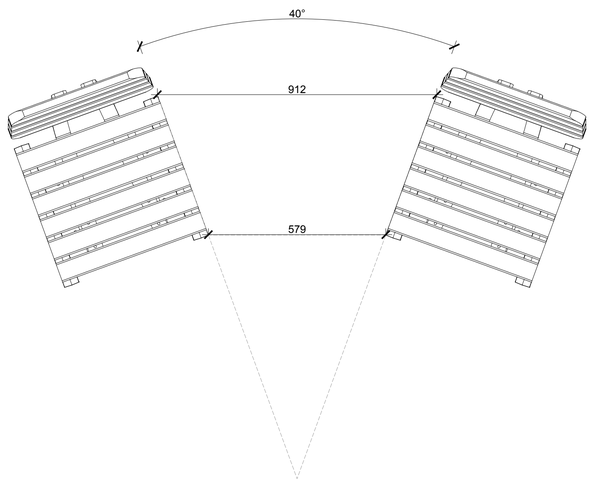

02 FN01 - SEAT SETOUT

PLAN - Scale: 1:10@A1

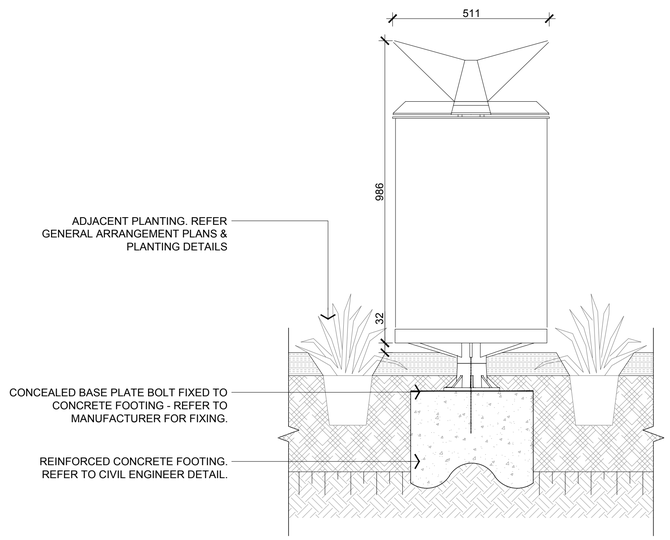

04 FI02 A/B - BIN IN PLANTING

PLAN - Scale: 1:10@A1

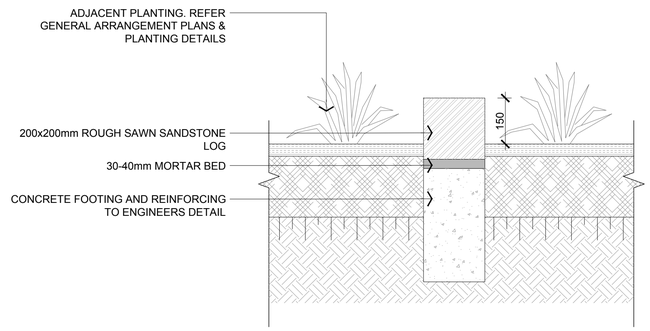

05 FN05 - LINEAR STONE EDGING

PLAN - Scale: 1:10@A1

These plans are referred to in certificate no. **16746** approved by:

Eric Hausfeld
Registered Certifier

Registration No: BDC 2416

Categories: Certifier – Subdivision
Certifier – Strata
Certifier – Stormwater
Certifier – Road & Drainage
Certifier – Hydraulic (stormwater)

Land Development Certificates
www.LDC.com.au

CONSULTANT

Hassell LTD ABN 24 007 711 435
Level2, Pier 8/9,23 Hickson Rd
Sydney NSW 2000 Australia
T +61 2 9101 2000
F +61 2 9101 2100
sydney@hassellstudio.com
Nominated Architects NSW:
Tony Grist 5350
Glenn Scott 6842
Ross de la Motte 7398

REFERENCE

NORTH

NOTES

1. Do not scale drawing. Written dimensions govern
2. All dimensions are in millimeters unless noted otherwise
3. All dimensions shall be verified on site before proceeding with the work. Hassell shall be notified in writing of any discrepancies.
4. This drawing must be read in conjunction with all relevant contracts, specifications and drawings

This drawing is an uncontrolled copy. Unless noted otherwise

© Copyright of this drawing is vested in Hassell Ltd.

REV	DESCRIPTION	DATE
A	FOR TENDER	16 08 2021

CLIENT
FRASERS PROPERTY AUSTRALIA

PROJECT
STAGE 1B STREETSCAPES
MIDTOWN IVANHOE, MACQUARIE PARK
SYDNEY, NSW 2113

STATUS
TENDER DOCUMENTATION

DRAWING TITLE
DETAILS - FURNITURE & FIXTURES

REVIEWED

APPROVED

DRAWING NO.
HSL_S1B_5201

SCALE @ A1
1:10

PROJECT NO.
012092

REV NO.
A

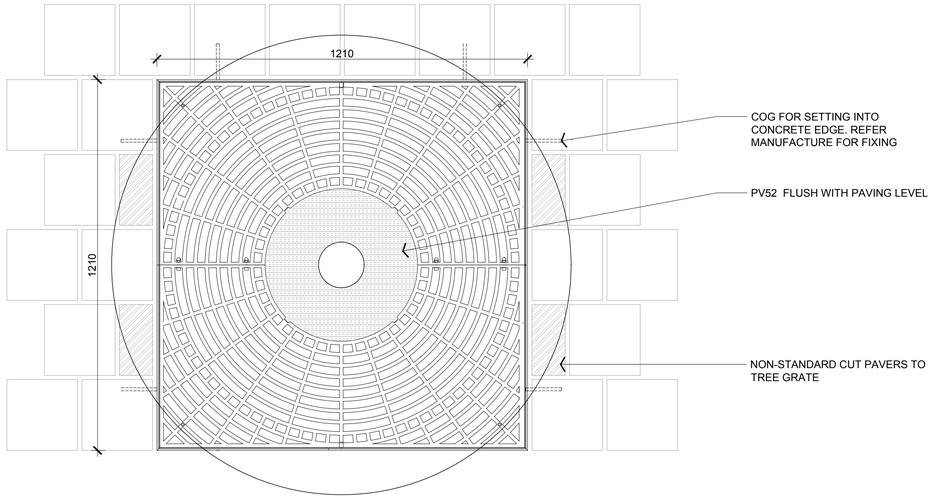

01 FI01 - TREE SURROUNDS IN PV01

ELEVATION - Scale: 1:10@A1

INDICATIVE ETCHING IMAGE

These plans are referred to in certificate no. **16746** approved by:

Eric Hausfeld
Registered Certifier

Registration No: BDC 2416
Categories: Certifier – Subdivision
Certifier – Strata
Certifier – Stormwater
Certifier – Road & Drainage
Certifier – Hydraulic (stormwater)

Land Development Certificates
www.LDC.com.au

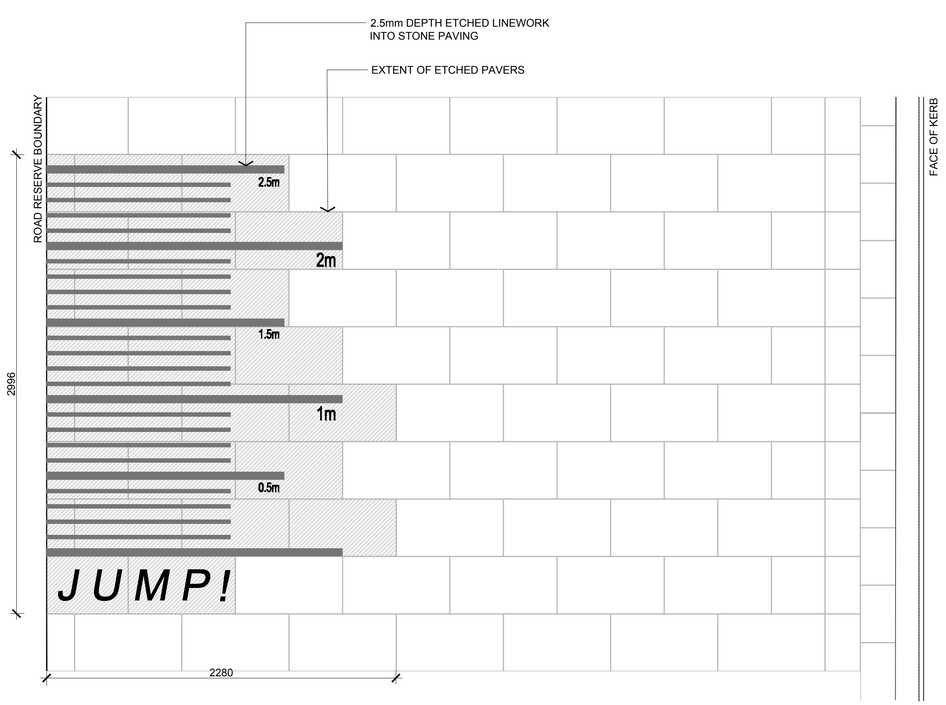

02 FI04 - ETCHED GAME

PLAN - Scale: 1:20@A1

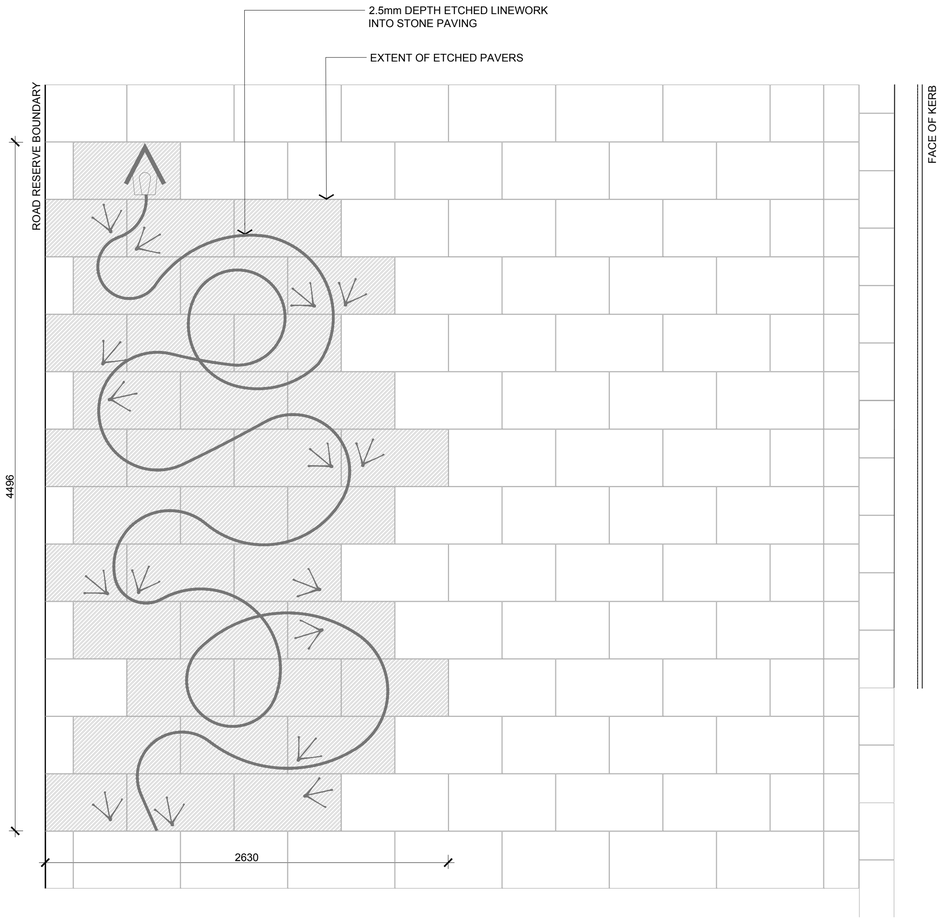

03 FI05 - ETCHED GAME

PLAN - Scale: 1:20@A1

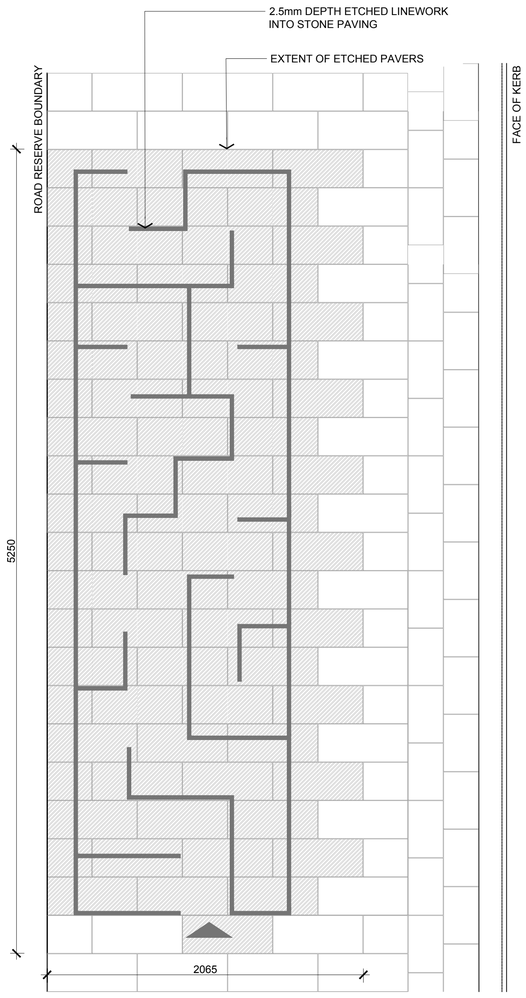

04 FI06 - ETCHED GAME

PLAN - Scale: 1:20@A1

CONSULTANT

Hassell LTD ABN 24 007 711 435
Level2, Pier 8/9,23 Hickson Rd
Sydney NSW 2000 Australia
T +61 2 9101 2000
F +61 2 9101 2100
sydney@hassellstudio.com
Nominated Architects NSW:
Tony Grist 5350
Glenn Scott 6842
Ross de la Motte 7398

REFERENCE

NORTH

NOTES

1. Do not scale drawing. Written dimensions govern
2. All dimensions are in millimeters unless noted otherwise
3. All dimensions shall be verified on site before proceeding with the work. Hassell shall be notified in writing of any discrepancies.
4. This drawing must be read in conjunction with all relevant contracts, specifications and drawings

This drawing is an uncontrolled copy. Unless noted otherwise

© Copyright of this drawing is vested in Hassell Ltd.

REV	DESCRIPTION	DATE
A	FOR TENDER	16 08 2021

CLIENT
FRASERS PROPERTY AUSTRALIA

PROJECT
STAGE 1B STREETSCAPES
MIDTOWN IVANHOE, MACQUARIE PARK
SYDNEY, NSW 2113

STATUS
TENDER DOCUMENTATION

DRAWING TITLE
DETAILS - FURNITURE & FIXTURES

REVIEWED

APPROVED

DRAWING NO.
HSL_S1B_5202

SCALE @ A1
VARIES

PROJECT NO.
012092

REV NO.
A

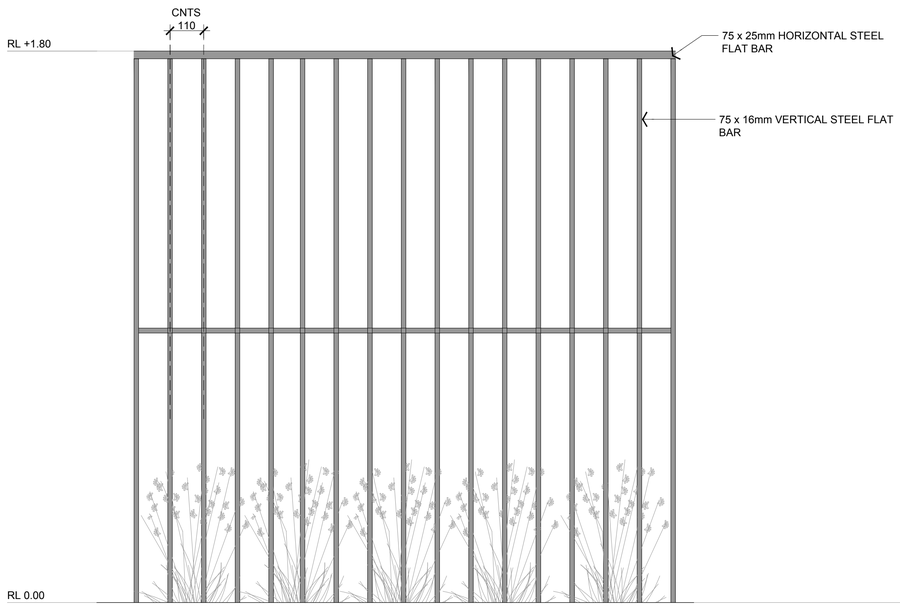

ELEVATION

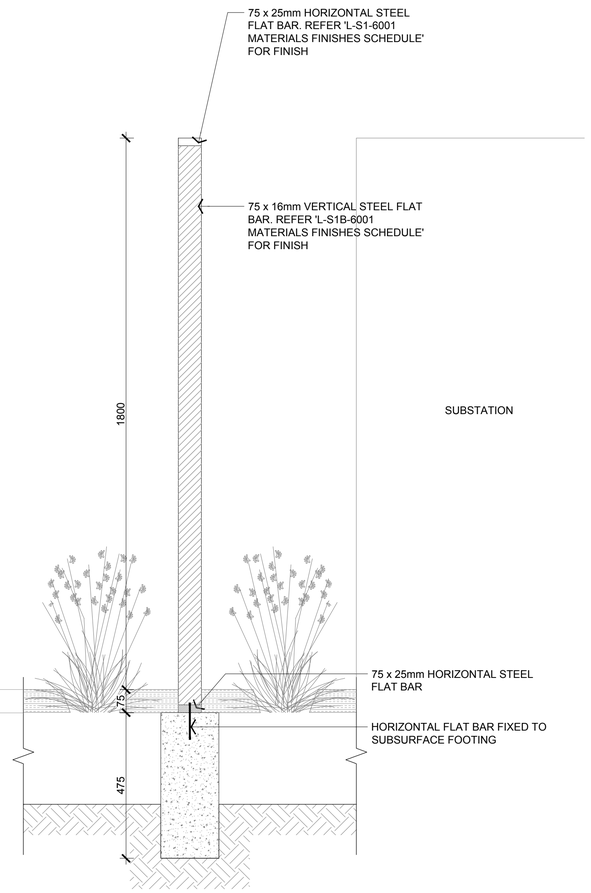

SECTION - AA

01 FE02 - VERTICAL PALISADE FENCE

SECTION - Scale: 1:10@A1

These plans are referred to in certificate no. **16746** approved by:

Eric Hausfeld
Registered Certifier

Registration No: BDC 2416

Categories: Certifier – Subdivision
Certifier – Strata
Certifier – Stormwater
Certifier – Road & Drainage
Certifier – Hydraulic (stormwater)

Land Development Certificates
www.LDC.com.au

CONSULTANT

Hassell LTD ABN 24 007 711 435
Level2, Pier 8/9,23 Hickson Rd
Sydney NSW 2000 Australia
T +61 2 9101 2000
F +61 2 9101 2100
sydney@hassellstudio.com
Nominated Architects NSW:
Tony Grist 5350
Glenn Scott 6842
Ross de la Motte 7398

REFERENCE

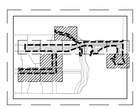

NORTH

NOTES

1. Do not scale drawing. Written dimensions govern
2. All dimensions are in millimeters unless noted otherwise
3. All dimensions shall be verified on site before proceeding with the work. Hassell shall be notified in writing of any discrepancies.
4. This drawing must be read in conjunction with all relevant contracts, specifications and drawings

This drawing is an uncontrolled copy. Unless noted otherwise

© Copyright of this drawing is vested in Hassell Ltd.

REV	DESCRIPTION	DATE
A	FOR TENDER	16 08 2021

CLIENT
FRASERS PROPERTY AUSTRALIA

PROJECT
MIDTOWN IVANHOE
MACQUARIE PARK
SYDNEY, NSW 2113

STATUS
TENDER DOCUMENTATION

DRAWING TITLE
DETAILS - FURNITURE & FIXTURES

REVIEWED

APPROVED

DRAWING NO.
HSL_S1B_5203

SCALE @ A1
1:10

PROJECT NO.
012092

REV NO.
A

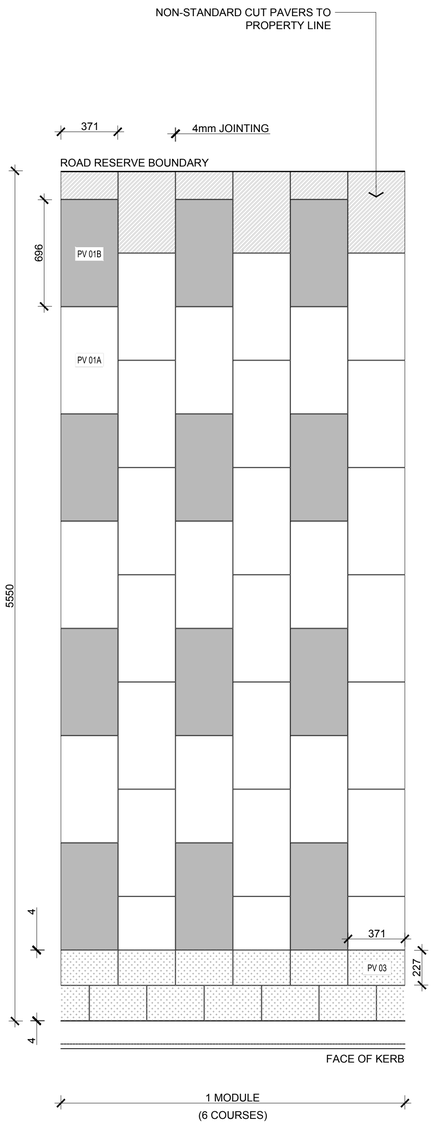

01 PV01 / PV03 - MAIN STREET PAVING

PLAN - Scale: 1:20@A1

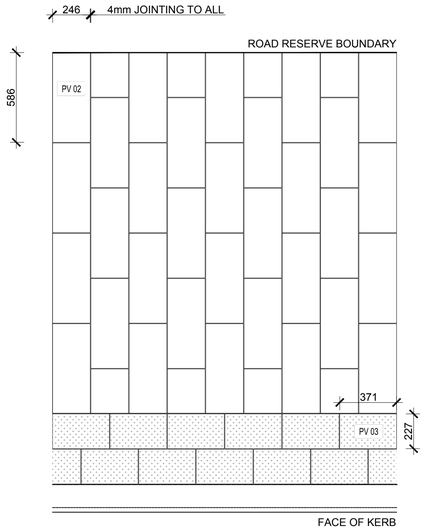

02 PV02 / PV03 - NEIGHBOURHOOD STREET PAVING

PLAN - Scale: 1:20@A1

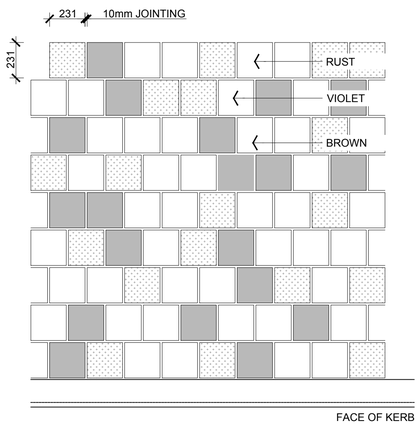

NOTE: PAVING COLOURS TO BE SET OUT IN AN IRREGULAR MIX ACROSS THE GRID. NO SAME COLOURS TO OCCUR IN A ROW OF THREE OR MORE

03 PV04 - MAIN STREET ARRIVAL

PLAN - Scale: 1:20@A1

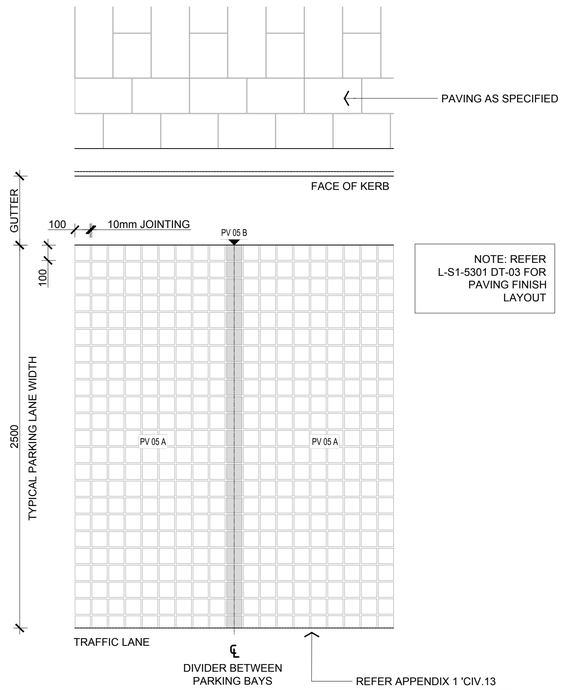

NOTE: REFER L-S1-5301 DT-03 FOR PAVING FINISH LAYOUT

04 PV05 - PARKING BAYS

PLAN - Scale: 1:20@A1

These plans are referred to in certificate no. **16746** approved by:

Eric Hausfeld
Registered Certifier

Registration No: BDC 2416

Categories: Certifier – Subdivision
Certifier – Strata
Certifier – Stormwater
Certifier – Road & Drainage
Certifier – Hydraulic (stormwater)

Land Development Certificates
www.LDC.com.au

CONSULTANT

Hassell LTD ABN 24 007 711 435
Level2, Pier 8/9,23 Hickson Rd
Sydney NSW 2000 Australia
T +61 2 9101 2000
F +61 2 9101 2100
sydney@hassellstudio.com
Nominated Architects NSW:
Tony Grist 5350
Glenn Scott 6842
Ross de la Motte 7398

REFERENCE

NORTH

NOTES

1. Do not scale drawing. Written dimensions govern
2. All dimensions are in millimeters unless noted otherwise
3. All dimensions shall be verified on site before proceeding with the work. Hassell shall be notified in writing of any discrepancies.
4. This drawing must be read in conjunction with all relevant contracts, specifications and drawings

This drawing is an uncontrolled copy. Unless noted otherwise

© Copyright of this drawing is vested in Hassell Ltd.

REV	DESCRIPTION	DATE
A	FOR TENDER	16 08 2021

CLIENT
FRASERS PROPERTY AUSTRALIA

PROJECT
STAGE 1B STREETSCAPES
MIDTOWN IVANHOE, MACQUARIE PARK
SYDNEY, NSW 2113

STATUS
TENDER DOCUMENTATION

DRAWING TITLE
DETAILS - PAVING

REVIEWED

APPROVED

DRAWING NO.
HSL_S1B_5301

SCALE @ A1
1:20

PROJECT NO.
012092

REV NO.
A

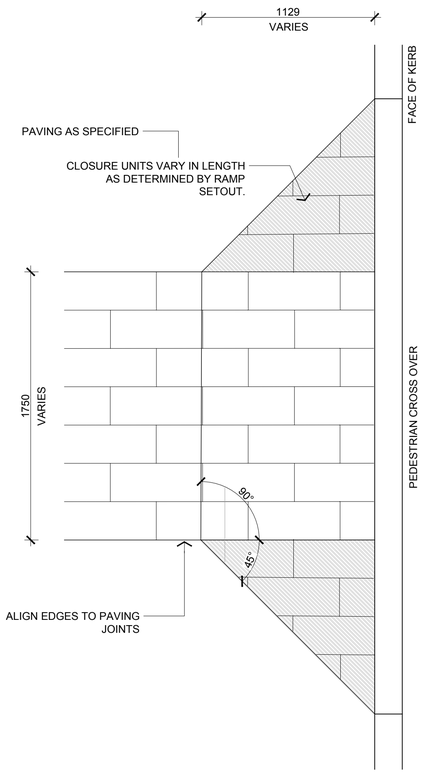

01 STONE PAVING - PEDESTRIAN RAMP

PLAN - Scale: 1:20@A1

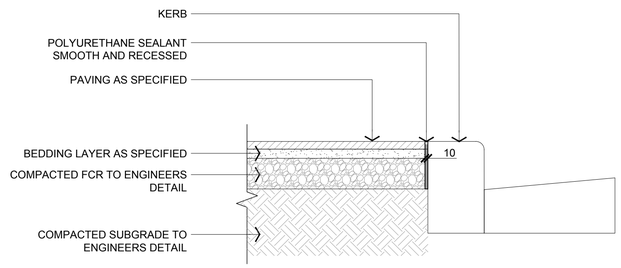

03 JUNCTION - STONE PAVING & KERB

PLAN - Scale: 1:10@A1

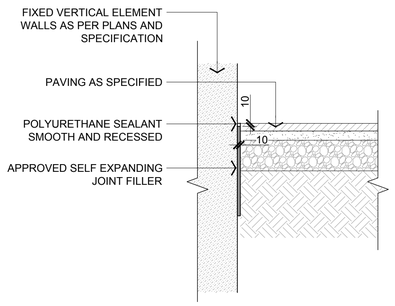

04 JUNCTION - STONE PAVING & WALL

PLAN - Scale: 1:10@A1

These plans are referred to in certificate no. **16746** approved by:

Eric Hausfeld
Registered Certifier

Registration No: BDC 2416
Categories: Certifier – Subdivision
Certifier – Strata
Certifier – Stormwater
Certifier – Road & Drainage
Certifier – Hydraulic (stormwater)

Land Development Certificates
www.LDC.com.au

CONSULTANT

Hassell LTD ABN 24 007 711 435
Level2, Pier 8/9,23 Hickson Rd
Sydney NSW 2000 Australia
T +61 2 9101 2000
F +61 2 9101 2100
sydney@hassellstudio.com
Nominated Architects NSW:
Tony Grist 5350
Glenn Scott 6842
Ross de la Motte 7398

REFERENCE

NORTH

NOTES

1. Do not scale drawing. Written dimensions govern
2. All dimensions are in millimeters unless noted otherwise
3. All dimensions shall be verified on site before proceeding with the work. Hassell shall be notified in writing of any discrepancies.
4. This drawing must be read in conjunction with all relevant contracts, specifications and drawings

This drawing is an uncontrolled copy. Unless noted otherwise

© Copyright of this drawing is vested in Hassell Ltd.

REV	DESCRIPTION	DATE
A	FOR TENDER	16 08 2021

CLIENT
FRASERS PROPERTY AUSTRALIA

PROJECT
STAGE 1B STREETSCAPES
MIDTOWN IVANHOE, MACQUARIE PARK
SYDNEY, NSW 2113

STATUS
TENDER DOCUMENTATION

DRAWING TITLE
DETAILS - PAVING

REVIEWED

APPROVED

DRAWING NO.
HSL_S1B_5302

SCALE @ A1
VARIES

PROJECT NO.
012092

REV NO.
A

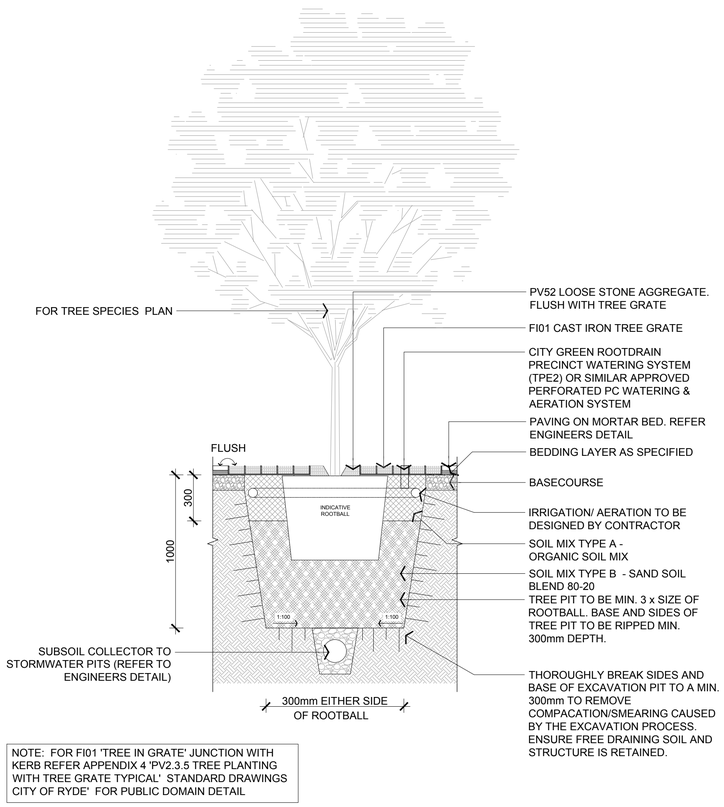

NOTE: FOR FI01 'TREE IN GRATE' JUNCTION WITH KERB REFER APPENDIX 4 'PV2.3.5 TREE PLANTING WITH TREE GRATE TYPICAL' STANDARD DRAWINGS CITY OF RYDE' FOR PUBLIC DOMAIN DETAIL

01 TREE/ FI01 - TREE IN GRATE
SECTION - Scale: 1:20@A1

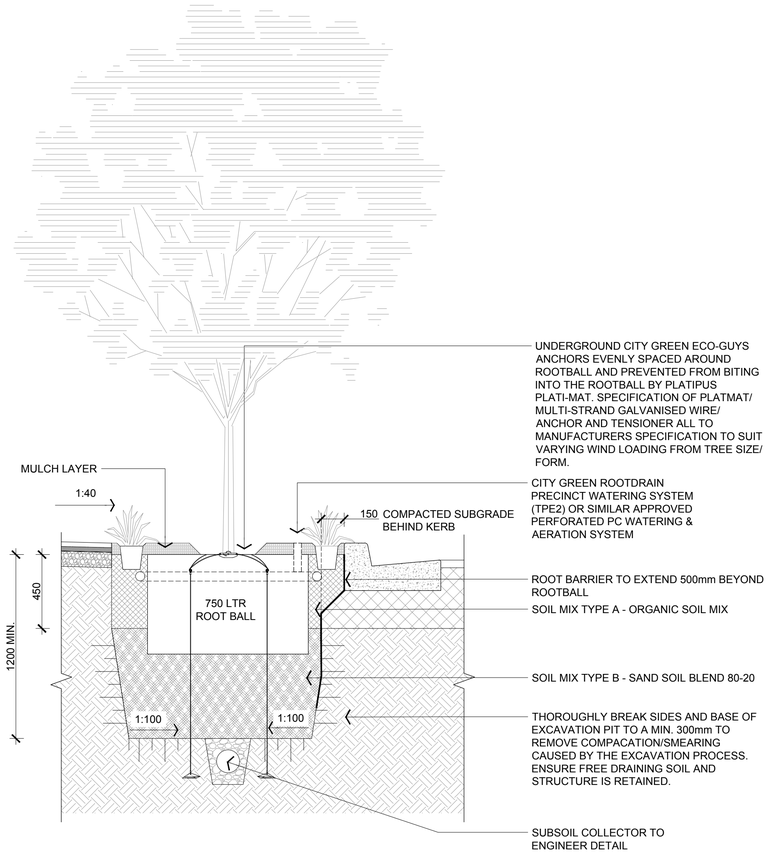

02 TREE - 750LTR STREET TREE
SECTION - Scale: 1:20@A1

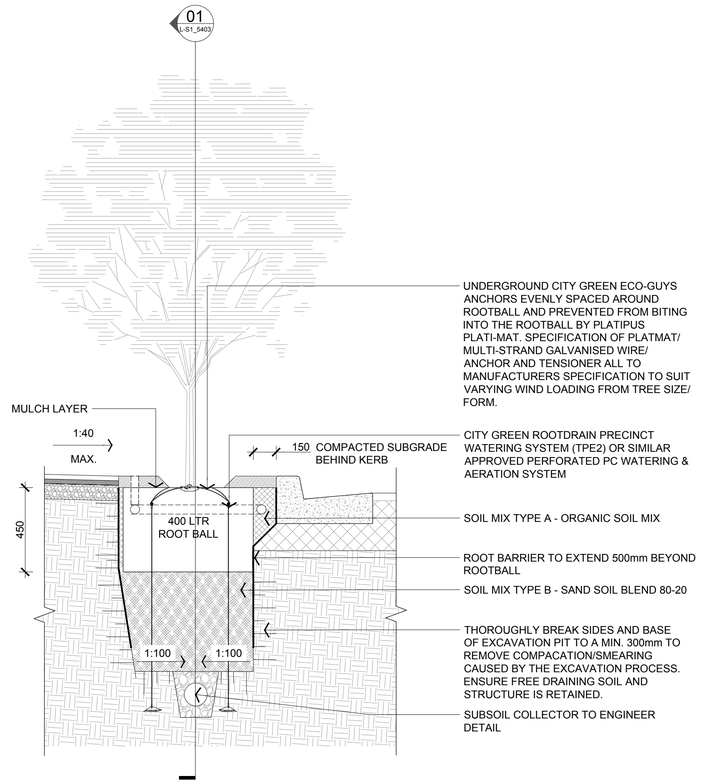

03 TREE - 400LTR STREET TREE
SECTION - Scale: 1:20@A1

DETAIL DISCONTINUED
REFER TO MATERIAL AND FINISHES SCHEDULE

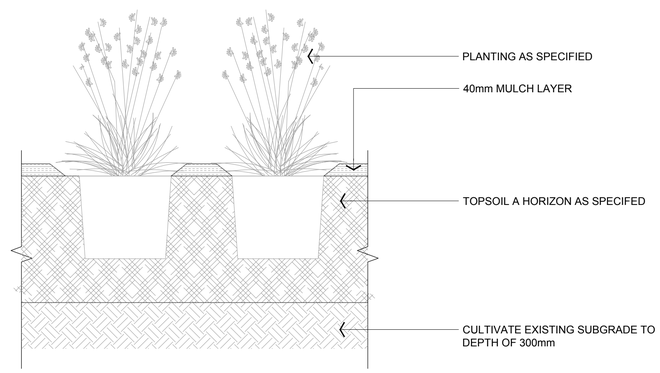

04 PL02/03/09/10 - GROUNDCOVER PLANTING
SECTION - Scale: 1:10@A1

UPDATED TO REFLECT RELEVANT PLANTING MIXES

These plans are referred to in certificate no. **16746** approved by:

Eric Hausfeld
Registered Certifier

Registration No: BDC 2416
Categories: Certifier – Subdivision
Certifier – Strata
Certifier – Stormwater
Certifier – Road & Drainage
Certifier – Hydraulic (stormwater)

Land Development Certificates
www.LDC.com.au

CONSULTANT

Hassell LTD ABN 24 007 711 435
Level2, Pier 8/9,23 Hickson Rd
Sydney NSW 2000 Australia
T +61 2 9101 2000
F +61 2 9101 2100
sydney@hassellstudio.com
Nominated Architects NSW:
Tony Grist 5350
Glenn Scott 6842
Ross de la Motte 7398

REFERENCE

NORTH

NOTES
1. Do not scale drawing. Written dimensions govern
2. All dimensions are in millimeters unless noted otherwise
3. All dimensions shall be verified on site before proceeding with the work. Hassell shall be notified in writing of any discrepancies.
4. This drawing must be read in conjunction with all relevant contracts, specifications and drawings

This drawing is an uncontrolled copy. Unless noted otherwise

© Copyright of this drawing is vested in Hassell Ltd.

REV	DESCRIPTION	DATE
B	TENDER FOR ADDENDUM	18 10 2021
A	FOR TENDER	16 08 2021

CLIENT
FRASERS PROPERTY AUSTRALIA

PROJECT
STAGE 1B STREETSCAPES
MIDTOWN IVANHOE, MACQUARIE PARK
SYDNEY, NSW 2113

STATUS
TENDER DOCUMENTATION

DRAWING TITLE
DETAILS - PLANTING

REVIEWED

APPROVED

DRAWING NO.
HSL_S1B_5401

REV NO.
B

SCALE @ A1
1:20

PROJECT NO.
012092

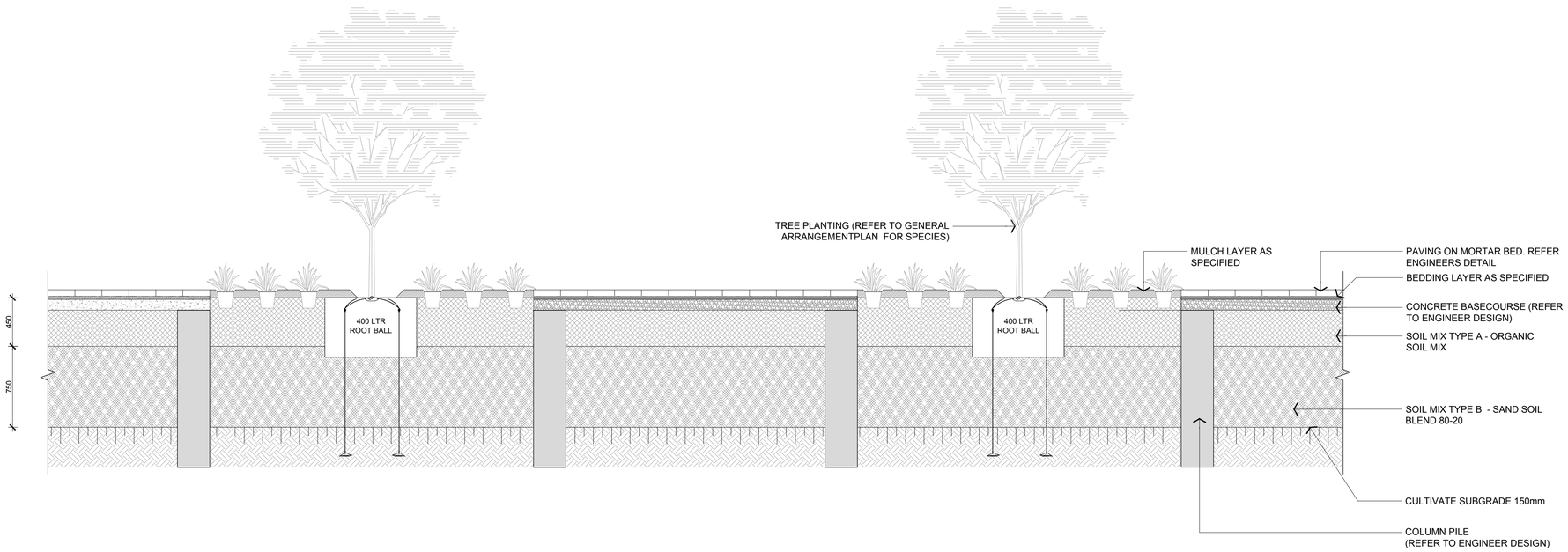

01 TREE - 400LTR STREET TREE

SECTION - Scale: 1:25@A1

CONSULTANT

Hassell LTD ABN 24 007 711 435
Level2, Pier 8/9,23 Hickson Rd
Sydney NSW 2000 Australia
T +61 2 9101 2000
F +61 2 9101 2100
sydney@hassellstudio.com
Nominated Architects NSW:
Tony Grist 5350
Glenn Scott 6842
Ross de la Motte 7398

REFERENCE

NORTH

NOTES

1. Do not scale drawing. Written dimensions govern
2. All dimensions are in millimeters unless noted otherwise
3. All dimensions shall be verified on site before proceeding with the work. Hassell shall be notified in writing of any discrepancies.
4. This drawing must be read in conjunction with all relevant contracts, specifications and drawings

This drawing is an uncontrolled copy. Unless noted otherwise

© Copyright of this drawing is vested in Hassell Ltd.

REV	DESCRIPTION	DATE
A	FOR TENDER	16 08 2021

CLIENT
FRASERS PROPERTY AUSTRALIA

PROJECT
STAGE 1B STREETSCAPES
MIDTOWN IVANHOE, MACQUARIE PARK
SYDNEY, NSW 2113

STATUS
TENDER DOCUMENTATION

DRAWING TITLE
DETAILS - PLANTING

REVIEWED

APPROVED

DRAWING NO.
HSL_S1B_5403

SCALE @ A1
1:25

PROJECT NO.
012092

REV NO.
A

SHRIMPTON CREEK BRIDGE

NEW BRIDGE - 2021

DESIGN STANDARD: AS 5100: 2017 SERIES BRIDGE DESIGN

ROAD TRAFFIC LOADING: SM1600

NUMBER OF DESIGN LANES: 2
DESIGN TRAFFIC SPEED: 60km/h

TRAFFIC BARRIER PERFORMANCE LEVEL: MEDIUM

WIND LOADING

WIND TERRAIN CATEGORY: 2
WIND REGION: A2
WIND VELOCITY ULS: 48m/s
WIND VELOCITY SLS: 37m/s
AVERAGE RECURRENCE INTERVAL (ARI) ULS = 2000 YEARS
AVERAGE RECURRENCE INTERVAL (ARI) SLS = 20 YEARS

EARTHQUAKE LOADING: AS 5100.2

DESIGN CATEGORY: BEDC-2
DESIGN PERFORMANCE LEVEL: DAMAGE CONTROL
ANNUAL PROBABILITY OF EXCEEDANCE: P = 1:500
PROBABILITY FACTOR: K_p = 1.0
SEISMIC HAZARD FACTOR: Z = 0.08
SITE SUBSOIL CLASS: B_e/C_e - ROCK OR SHALLOW SOIL
DESIGN DUCTILITY FACTOR - HORIZONTAL (LONGITUDINAL): μ = 4.0
DESIGN DUCTILITY FACTOR - HORIZONTAL (TRANSVERSE): μ = 4.0

FLOOD DATA

ARI	100 years	2000 years
DESIGN FLOWRATE (m^3/s)	93	123
FLOOD VELOCITY (m/s)	2.3	2.5
FLOOD LEVEL (mAHD)	44.7	45.2

SCOUR DEPTH	100 years ARI	2000 years ARI
ABUTMENT A	3.3	5.0
PIER 1	3.2	3.5
PIER 2	3.2	3.5
ABUTMENT B	N.A	N.A

DIFFERENTIAL SETTLEMENT

5mm TOTAL BETWEEN BRIDGE SUPPORTS

CONSTRUCTION LOADING

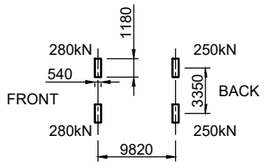

651 SCRAPER

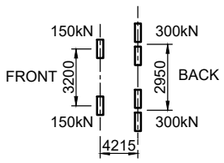

773 ROCK TRUCK (CATERPILLAR)

LOADS REPRESENT MAX WORKING WHEEL LOADS.
DESIGN DYNAMIC LOAD ALLOWANCE NOT INCLUDED IN THESE LOADS.
THE DESIGN ADOPTS A DYNAMIC LOAD ALLOWANCE OF 0.1 AND AN ULTIMATE LIMIT STATE LOAD FACTOR OF 1.5.
VEHICLE SPEED IS RESTRICTED TO 10km/h ON THE BRIDGE.
LOAD IS TO BE RESTRICTED TO ONE VEHICLE AT ANY TIME RUNNING WITHIN THE CENTRAL 5m OF DECK WITH NO CO-EXISTING LOADING.
FOR THE 773 VEHICLE, THE WHEEL CONTACT AREA IS ASSUMED TO BE 750mm (TRANSVERSE) x 250mm (LONGITUDINAL).

JACKING OF BRIDGE DECK FOR BEARING REPLACEMENT

FOR INFORMATION ONLY
THE DESIGN INCLUDES THE FOLLOWING REQUIREMENTS:

- COVER PLATE AND RAILING ON APPROACH ARE TO BE REMOVED PRIOR TO JACKING.
- NO TRAFFIC SHALL BE OVER THE BRIDGE DURING JACKING.
- DYNAMIC LOAD ALLOWANCE OF α = 0.1 HAS BEEN INCLUDED IN THE DESIGN.
- REFER DRAWING No 115 AND 116 FOR JACKING LOCATIONS AND JACKING LOADS.
- ALL JACKS AT EACH LIFT POINT SHALL BE HYDRAULICALLY LINKED AND HAVE A CONTROL MECHANISM TO ENSURE THAT THE SAME VERTICAL DISPLACEMENTS OCCUR AT EACH LIFT POINT AT ALL TIMES DURING THE JACKING OPERATION.
- BRIDGE BEARINGS ARE DESIGNED TO BE REPLACED USING LIFTS OF NOT GREATER THAN 5mm.
- STEEL PLATES SHALL BE PLACED BETWEEN CONCRETE BEARING SURFACE AND HYDRAULIC JACK.
- MAXIMUM ALLOWABLE CONTACT PRESSURE BETWEEN CONCRETE SURFACE AND STEEL PLATES SHALL BE 25MPa.
- HORIZONTAL RESTRAINTS TO BE MAINTAINED TO RESIST A FORCE OF 500kN AT EACH ABUTMENT AND PIER. 03

LIST OF SPECIFICATIONS (BUT NOT LIMITED TO)

No.	SPECIFICATIONS FOR BRIDGE WORKS
TfNSW QA R53	CONCRETE (FOR GENRAL USE), MORTAR AND GROUT
TfNSW QA R63	GEOTEXTILES (SEPARATION AND FILTRATION)
TfNSW QA R132	SAFETY BARRIER SYSTEMS
TfNSW QA B30	EXCAVATION AND BACKFILL FOR BRIDGE WORKS
TfNSW QA B58	BORED CAST-IN-PLACE REINFORCED CONCRETE PILES (WITH PERMANENT CASING)
TfNSW QA B59	BORED CAST-IN-PLACE REINFORCED CONCRETE PILES (WITHOUT PERMANENT CASING)
TfNSW QA B80	CONCRETE WORK FOR BRIDGES
TfNSW QA B170	SUPPLY AND INSTALLATION OF VOID FORMERS
TfNSW QA B201	STEEL WORK FOR BRIDGES
TfNSW QA 220	PROTECTIVE TREATMENT OF BRIDGE STEEL WORK
TfNSW QA 240	STEEL FASTERNERS
TfNSW QA 261	ERECTION OF STRUCTURAL ALUMINIUM
TfNSW QA 280	PLAN ELSTOMERIC BEARING PADS AND STRIPS
TfNSW QA 284	INSTALLATION OF BRIDGE BEARINGS
TfNSW QA 312	COLD APPLIED SEALED JOINTS
TfNSW QA 315	ELASTOMERIC STRIP SEAL EXPANSION JOINTS
TfNSW QA 344	SPRAYED BITUMINOUS WATERPROOFING MEMBRANES
TfNSW QA 345	SUPPLY OF BRIDGE NAME PLATES

LOCALITY PLAN

These plans are referred to in certificate no. **16746** approved by:
Eric Hausfeld
Registered Certifier
Registration No: BDC 2416
Categories: Certifier – Subdivision; Certifier – Strata; Certifier – Stormwater; Certifier – Road & Drainage; Certifier – Hydraulic (stormwater)
Land Development Certificates
www.LDC.com.au

DRAWING FILE LOCATION / NAME	PLOT DATE	TIME
V:_Vault\Projects\3001\30013046\110_CADD\CAD\DWG\30013046-100.dwg	14 Oct 2021	00:03:14

EXTERNAL REFERENCE FILES: X_30013046_SMEC_A1

REV	DATE	AMENDMENT / REVISION DESCRIPTION	WVR No.	APPROVAL
01	10.07.2021	ISSUED FOR TENDER	001	JD
02	20.08.2021	ISSUED FOR TENDER	001	JD
03	14.10.2021	ISSUED FOR TENDER	002	JD

TITLE	NAME
DRAFTER	T.SABAPATHI
DRAFTING CHECK	V.S.KODURU
DESIGNER	V.S.KODURU
DESIGN CHECK	V.BALAKRISHNAN
PROJECT MANAGER	J.DICKERSON
PROJECT DIRECTOR	K.LUU

SCALES AT A1 SIZE DRAWING

DESIGNER
SMEC
Member of the Surbana Jurong Group
© ABN 47 065 475 149
LEVEL 5, 20 BERRY STREET
NORTH SYDNEY NSW 2060
SMEC PROJECT No 30013046

CLIENT
FRASERS PROPERTY

PROJECT TITLE
SHRIMPTON CREEK BRIDGE
COVER SHEET

SCALE	PHASE	PROJECT / DRAWING No.	REVISION
AS NOTED	TENDER	30013046-100	03

A1 150 mm ON ORIGINAL

SCHEDULE OF DRAWINGS

100 COVER SHEET
101 DRAWING SCHEDULE

105 GENERAL ARRANGEMENT SHEET A
106 GENERAL ARRANGEMENT SHEET B
107 GENERAL ARRANGEMENT SHEET C

111 PILING LAYOUT
112 PILE DETAILS

115 ABUTMENT CONCRETE SHEET A
116 ABUTMENT CONCRETE SHEET B
117 ABUTMENT CONCRETE SHEET C

121 ABUTMENT REINFORCEMENT SHEET A
122 ABUTMENT REINFORCEMENT SHEET B
123 ABUTMENT REINFORCEMENT SHEET C
124 ABUTMENT REINFORCEMENT SHEET D

131 PIER DETAILS SHEET A
132 PIER DETAILS SHEET B
133 PIER DETAILS SHEET C

135 PIER REINFORCEMENT DETAILS SHEET A
136 PIER REINFORCEMENT DETAILS SHEET B

141 BEARINGS

151 DECK SETTING OUT
152 DECK CONCRETE SHEET A
153 DECK CONCRETE SHEET B

161 DECK POST TENSIONING SHEET A
162 DECK POST TENSIONING SHEET B
163 DECK POST TENSIONING SHEET C

171 DECK REINFORCEMENT SHEET A
172 DECK REINFORCEMENT SHEET B
173 DECK REINFORCEMENT SHEET C
174 DECK REINFORCEMENT SHEET D

181 ON STRUCTURE BARRIER DETAILS SHEET A
182 ON STRUCTURE BARRIER DETAILS SHEET B
183 ON STRUCTURE BARRIER DETAILS SHEET C
184 ON STRUCTURE BARRIER DETAILS SHEET D
185 ON STRUCTURE BARRIER DETAILS SHEET E

186 RETAINING WALL CONCRETE DETAILS
187 RETAINING WALL REINFORCEMENT DETAILS

188 OFF STRUCTURE BARRIER DETAILS SHEET A
189 OFF STRUCTURE BARRIER DETAILS SHEET B

190 OFF STRUCTURE BARRIER CYCLE RAIL AND HAND RAIL TERMINATION DETAIL

191 APPROACH SLAB CONCRETE SHEET A
192 APPROACH SLAB CONCRETE SHEET B

195 APPROACH SLAB REINFORCEMENT SHEET A
196 APPROACH SLAB REINFORCEMENT SHEET B

201 EXPANSION JOINT DETAILS SHEET A
202 EXPANSION JOINT DETAILS SHEET B

205 COVER PLATE DETAILS SHEET A
206 COVER PLATE DETAILS SHEET B

211 SCOUR PROTECTION DETAILS SHEET A
212 SCOUR PROTECTION DETAILS SHEET B
213 MAINTENANCE ACCESS

215 BAR SHAPES DIAGRAMS

221 CLADDING DETAILS SHEET A
222 CLADDING DETAILS SHEET B
223 CLADDING DETAILS SHEET C

230 BRIDGE AND APPROACH SLAB PAVEMENT DETAILS

235 RAIL SPLICE DETAILS AT CURVE LOCATION

These plans are referred to in certificate no: **16746** approved by:
Eric Hausfeld
Registered Certifier
Registration No: BDC 2416
Categories: Certifier – Subdivision
Certifier – Strata
Certifier – Stormwater
Certifier – Road & Drainage
Certifier – Hydraulic (stormwater)
Land Development Certificates
www.LDC.com.au

DRAWING FILE LOCATION / NAME: V:_Vault\Projects\3001\30013046\110_CADD\CAD\DWG\30013046-101.dwg

PLOT DATE: 14 Oct 2021 TIME: 00:03:01

EXTERNAL REFERENCE FILES: X_30013046_SMEC_A1

REV	DATE	AMENDMENT / REVISION DESCRIPTION	WVR No.	APPROVAL
01	10.07.2021	ISSUED FOR TENDER	001	JD
02	20.08.2021	ISSUED FOR TENDER	001	JD

TITLE	NAME
DRAFTER	T.SABAPATHI
DRAFTING CHECK	V.S.KODURU
DESIGNER	V.S.KODURU
DESIGN CHECK	V.BALAKRISHNAN
PROJECT MANAGER	J.DICKERSON
PROJECT DIRECTOR	K.LUU

SCALES AT A1 SIZE DRAWING

DESIGNER: SMEC
Member of the Surbana Jurong Group
© ABN 47 065 475 149
LEVEL 5, 20 BERRY STREET
NORTH SYDNEY NSW 2060
SMEC PROJECT No 30013046

CLIENT: FRASERS PROPERTY

PROJECT TITLE: SHRIMPTON CREEK BRIDGE

DRAWING SCHEDULE

SCALE	PHASE	PROJECT / DRAWING No.	REVISION
AS NOTED	TENDER	30013046-101	02

150 mm ON ORIGINAL
A1

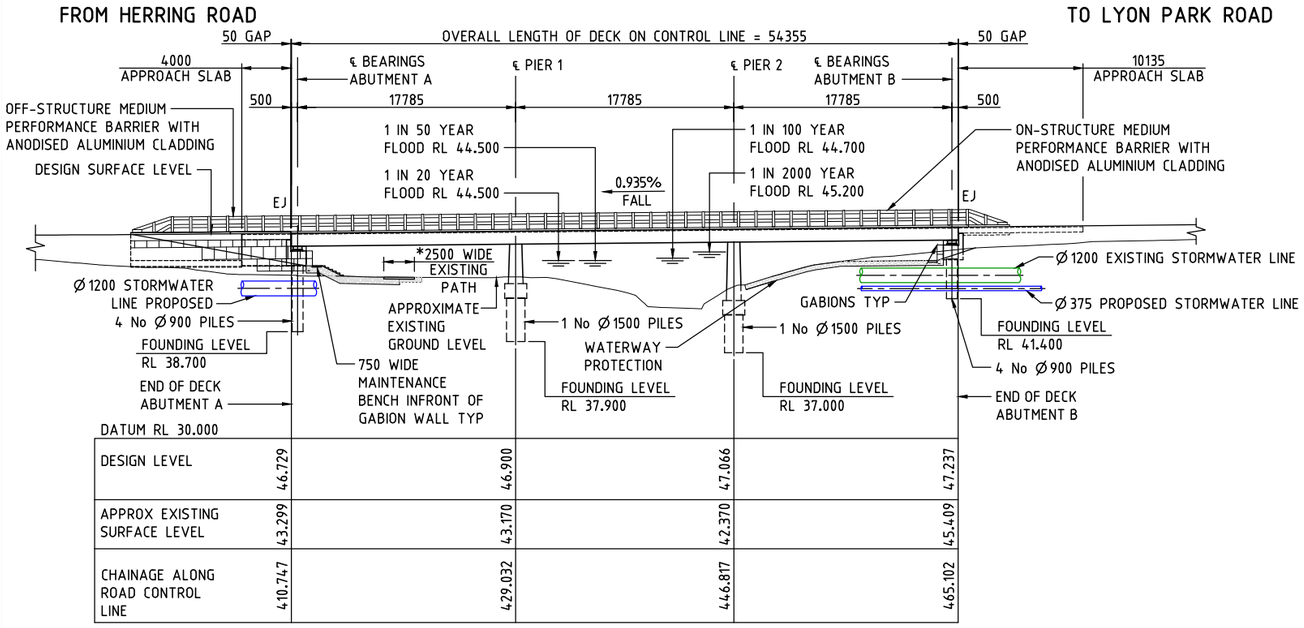

DESIGN LEVEL	46.729	46.900	47.066	47.237
APPROX EXISTING SURFACE LEVEL	43.299	43.170	42.370	45.409
CHAINAGE ALONG ROAD CONTROL LINE	410.747	429.032	446.817	465.102

ELEVATION
SCALE 1:250

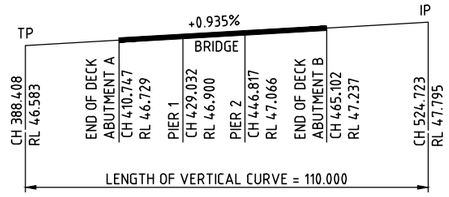

VERTICAL ALIGNMENT DIAGRAM
NOT TO SCALE

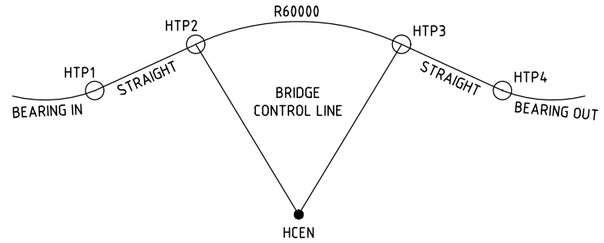

HORIZONTAL ALIGNMENT DIAGRAM
NOT TO SCALE

TABLE 1 - HORIZONTAL ALIGNMENT DATA - M010

POINT	LOCATION	EASTING	NORTHING	BEARING IN	BEARING OUT
HCEN	CENTRE OF CIRCLE	325753.827	6260275.793	-	-
HTP1	CH 399.798	325753.791	6260340.515	111°59'16"	-
HTP2	CH 424.064	325776.292	6260331.429	-	-
HTP3	CH 443.711	325792.992	6260321.248	-	-
HTP4	CH 470.403	325813.213	6260303.825	-	130°44'56"

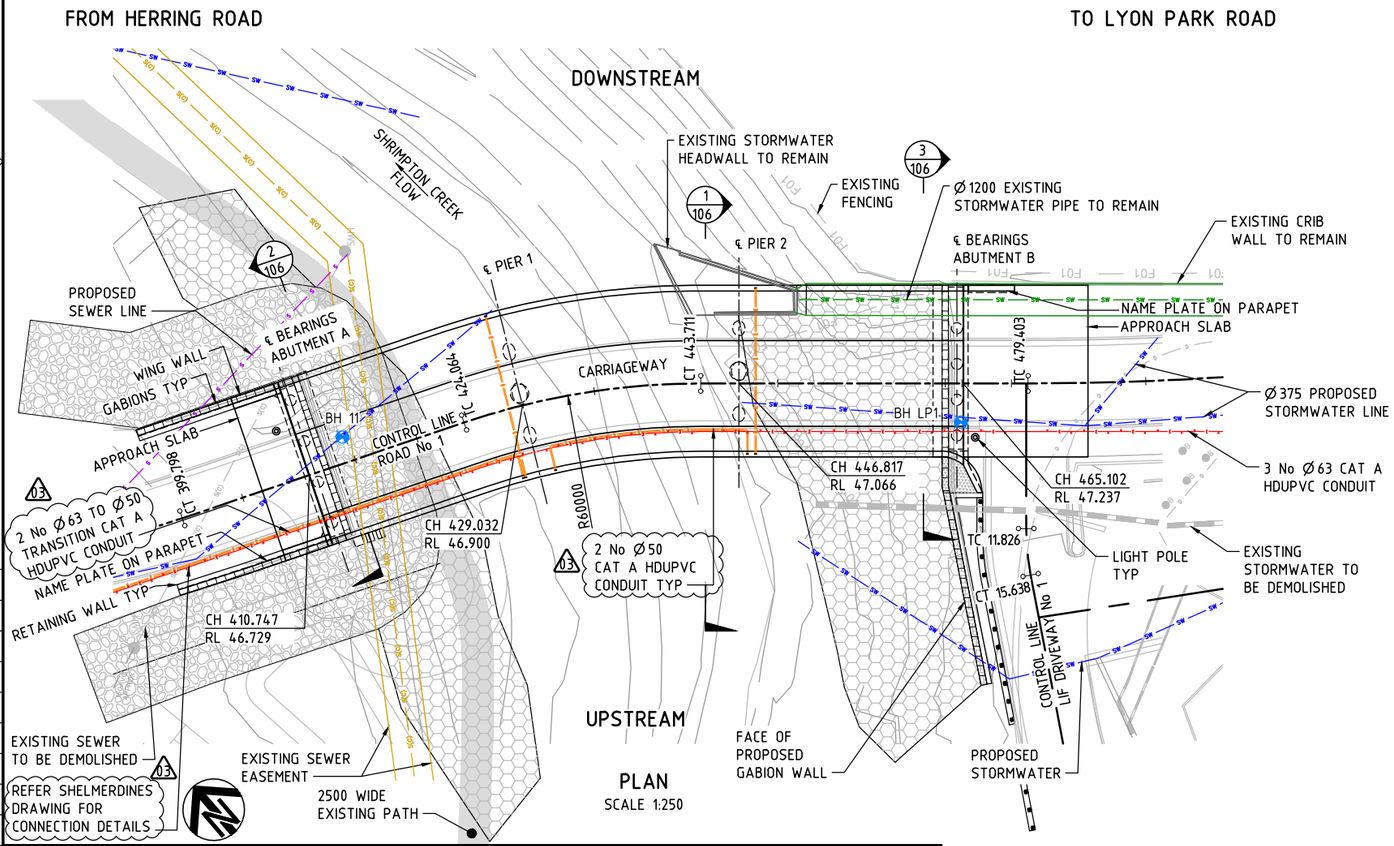

PLAN
SCALE 1:250

LEGEND

- BOLLARD
- SEWER MAN HOLE (SMH)
- F01 — FENCE 01
- BOREHOLE

PROPOSED UTILITIES

- SW — PROPOSED STORMWATER
- S — PROPOSED SEWER LINE
- E — PROPOSED Ø50 ELECTRICAL LINE
- E — PROPOSED Ø63 ELECTRICAL LINE

EXISTING SERVICES TO BE DECOMMISSIONED

- UNDERGROUND STORMWATER PIPE (QL A)
- S(C) — UNDERGROUND SEWER (QL C)

EXISTING SERVICES TO REMAIN

- SW — UNDERGROUND STORMWATER PIPE (QL D)
- S(C) — UNDERGROUND SEWER (QL C)

GENERAL NOTES

ALL DIMENSIONS ARE IN MILLIMETRES UNLESS NOTED OTHERWISE.
CHAINAGES AND REDUCED LEVELS ARE IN METRES.
REDUCED LEVELS ARE TO AUSTRALIAN HEIGHT DATUM.
CO-ORDINATES ARE ON A LOCAL SYSTEM. REFER TO CIVIL DRAWINGS PREPARED BY ADW JOHNSON 30001(2)-ENG-005 FOR DETAILS.
ALL CONCRETE SURFACES THAT ARE VISIBLE TO ROAD USERS OR PEDESTRIANS AND WITHIN 3m ABOVE FINISHED SURFACE LEVEL OR ACCESSIBLE FOOTHOLDS SHALL BE TREATED WITH ANTI-GRAFFITI COATING.
REFER DRAWINGS PREPARED BY SHELMERDINES FOR LIGHTING DETAILS.
EJ DENOTES EXPANSION JOINT.
SP DENOTES SHARED PATH.
FP DENOTES FOOT PATH.
TL DENOTES TRAFFIC LANE.
* EXISTING PATH TO BE REINSTATED POST INSTALLATION OF SCOUR PROTECTION. FOR DETAILS REFER CIVILS DRAWING PREPARED BY ADW JOHNSON.

These plans are referred to in certificate no. 16746 approved by:
Eric Hausfeld
Registered Certifier
Registration No: BDC 2416
Categories: Certifier – Subdivision, Certifier – Strata, Certifier – Stormwater, Certifier – Road & Drainage, Certifier – Hydraulic (stormwater)
Land Development Certificates
www.LDC.com.au

DRAWING FILE LOCATION / NAME: V:_Vault\Projects\3001\30013046\110_CADD\CAD\DWG\30013046-105.dwg
PLOT DATE: 14 Oct 2021 TIME: 00:02:48

EXTERNAL REFERENCE FILES: X_30013046_SMEC_A1, X_DES_MAIN, X_SURV, X_BRG_PLAN, X_BRG_ELEV, X_PROP_SERVICES, X_PROP_BORE LOG, X_BRG_SCOUR PROTECTION

REV	DATE	AMENDMENT / REVISION DESCRIPTION	WVR No.	APPROVAL
01	10.07.2021	ISSUED FOR TENDER	001	JD
02	20.08.2021	ISSUED FOR TENDER	001	JD
03	14.10.2021	ISSUED FOR TENDER	002	JD

TITLE	NAME
DRAFTER	T.SABAPATHI
DRAFTING CHECK	V.S.KODURU
DESIGNER	V.S.KODURU
DESIGN CHECK	V.BALAKRISHNAN
PROJECT MANAGER	J.DICKERSON
PROJECT DIRECTOR	K.LUU

SCALES AT A1 SIZE DRAWING: 0 5000 10000mm; 2500 1250 1:250

DESIGNER: SMEC
Member of the Surbana Jurong Group
© ABN 47 065 475 149
LEVEL 5, 20 BERRY STREET
NORTH SYDNEY NSW 2060
SMEC PROJECT No 30013046

CLIENT: FRASERS PROPERTY

PROJECT TITLE: SHRIMPTON CREEK BRIDGE
GENERAL ARRANGEMENT
SHEET A

SCALE	PHASE	PROJECT / DRAWING No.	REVISION
AS NOTED	TENDER	30013046-105	03

150 mm ON ORIGINAL
A1

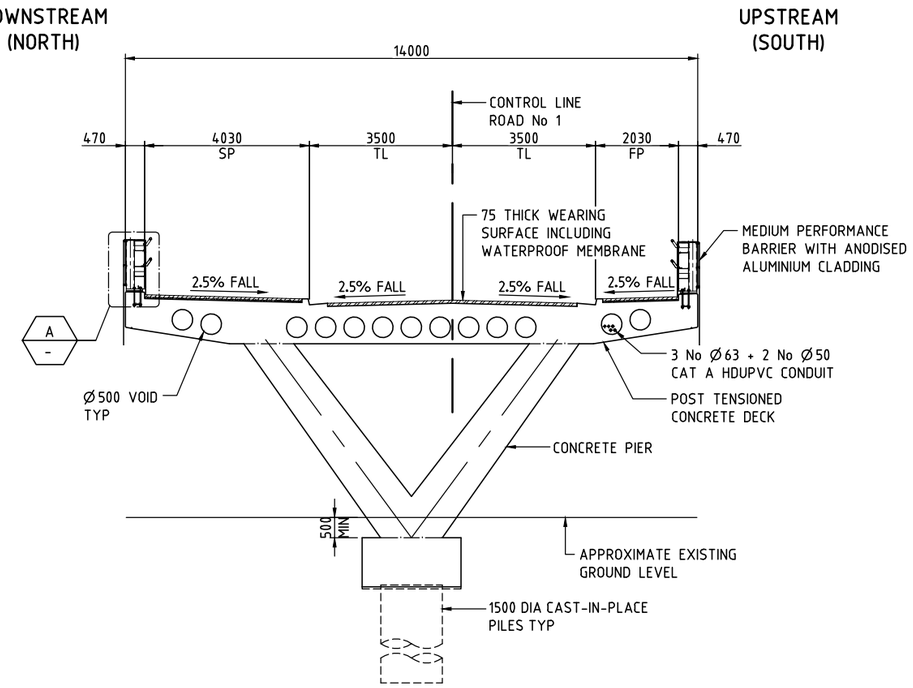

SECTION 1/105
SCALE 1:75

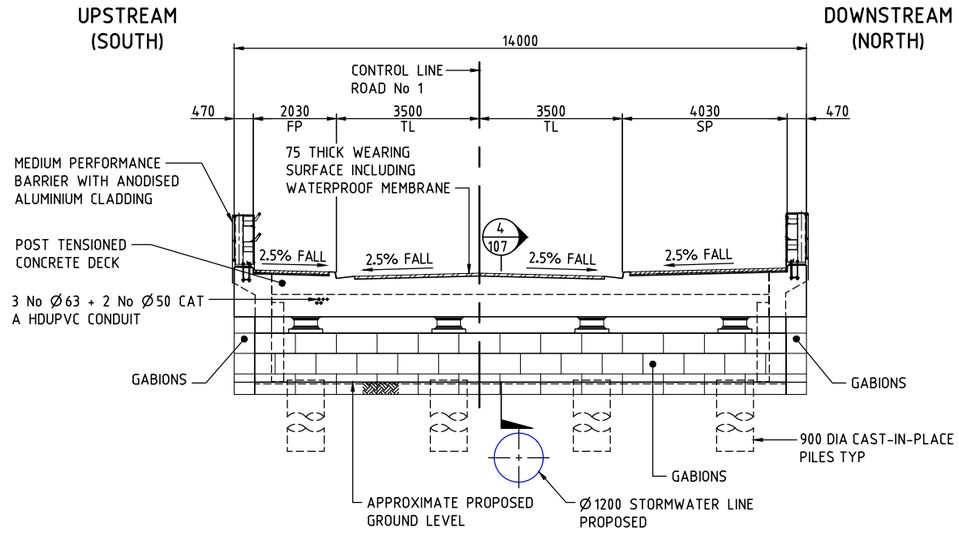

03 SECTION 2/105
SCALE 1:75

STAINLESS STEEL ANCHORS FOR CONNECTING
GABIONS NOT SHOWN FOR CLARITY

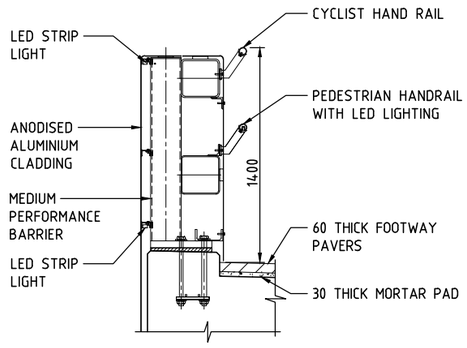

DETAIL A/-
SCALE 1:20

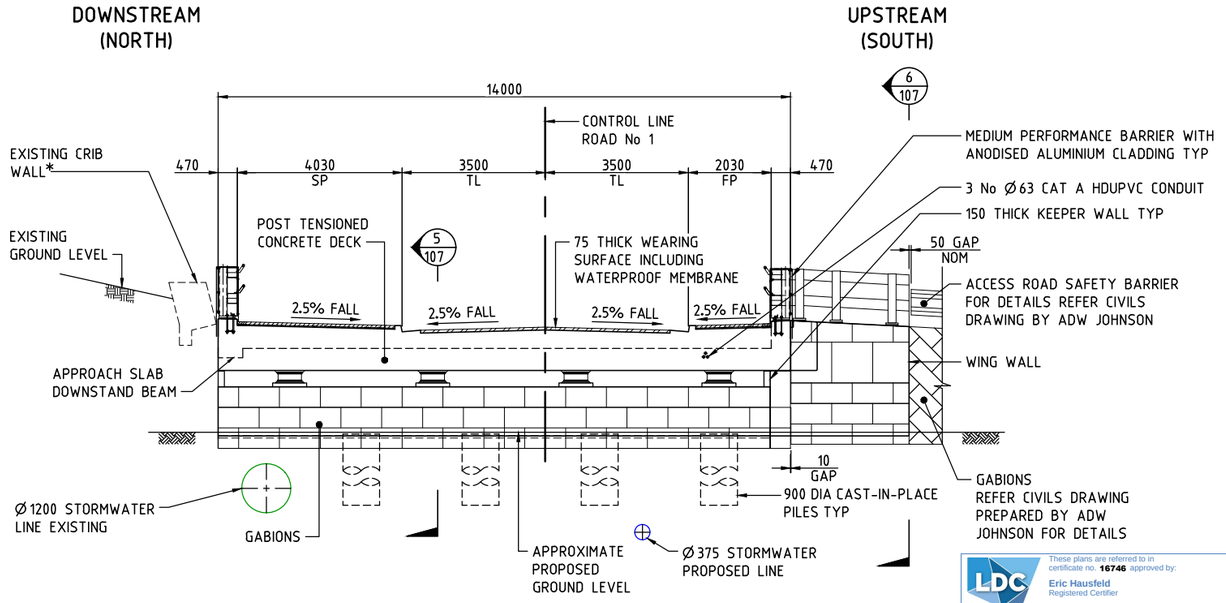

03 SECTION 3/105
SCALE 1:75

STAINLESS STEEL ANCHORS FOR HOLDING GABIONS IN POSITION
NOT SHOWN FOR CLARITY

* STABILITY OF EXISTING CRIB WALL TO BE MAINTAINED
BY CONTRACTOR DURING CONSTRUCTION

These plans are referred to in certificate no. **16746** approved by:
Eric Hausfeld
Registered Certifier
Registration No: BDC 2416
Categories: Certifier – Subdivision, Certifier – Strata, Certifier – Stormwater, Certifier – Road & Drainage, Certifier – Hydraulic (stormwater)
Land Development Certificates
www.LDC.com.au

GENERAL NOTES

FOR GENERAL NOTES RELATED TO THIS DRAWING, REFER DRG No 105.

DRAWING FILE LOCATION / NAME	PLOT DATE	TIME
V:_Vault\Projects\3001\30013046\110_CADD\CAD\DWG\30013046-106.dwg	14 Oct 2021	00:02:38

EXTERNAL REFERENCE FILES: X_30013046_SMEC_A1, X_BRG_SEC

REV	DATE	AMENDMENT / REVISION DESCRIPTION	WVR No.	APPROVAL
01	10.07.2021	ISSUED FOR TENDER	001	JD
02	20.08.2021	ISSUED FOR TENDER	001	JD
03	14.10.2021	ISSUED FOR TENDER	002	JD

TITLE	NAME
DRAFTER	T.SABAPATHI
DRAFTING CHECK	V.S.KODURU
DESIGNER	V.S.KODURU
DESIGN CHECK	V.BALAKRISHNAN
PROJECT MANAGER	J.DICKERSON
PROJECT DIRECTOR	K.LUU

SCALES AT A1 SIZE DRAWING: 0 1000 2000 3000mm; 750 375; 1:75

DESIGNER: SMEC
Member of the Surbana Jurong Group
© ABN 47 065 475 149
LEVEL 5, 20 BERRY STREET
NORTH SYDNEY NSW 2060
SMEC PROJECT No 30013046

CLIENT: FRASERS PROPERTY

PROJECT TITLE: SHRIMPTON CREEK BRIDGE

GENERAL ARRANGEMENT
SHEET B

SCALE	PHASE	PROJECT / DRAWING No.	REVISION
AS NOTED	TENDER	30013046-106	03

150 mm ON ORIGINAL
A1

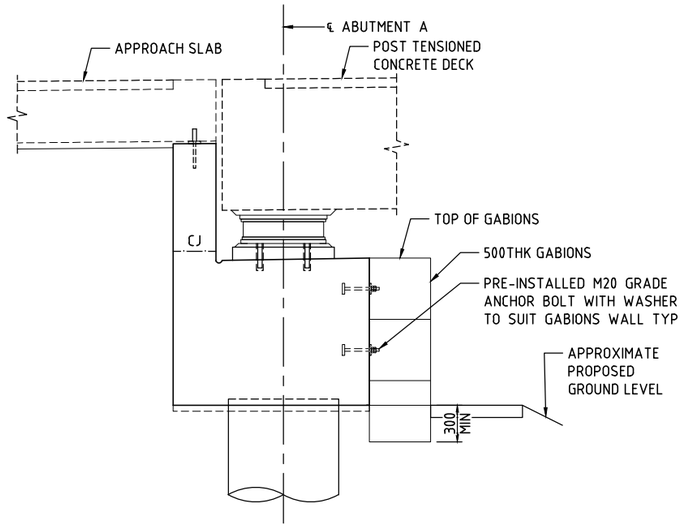

SECTION 4/106
SCALE 1:25

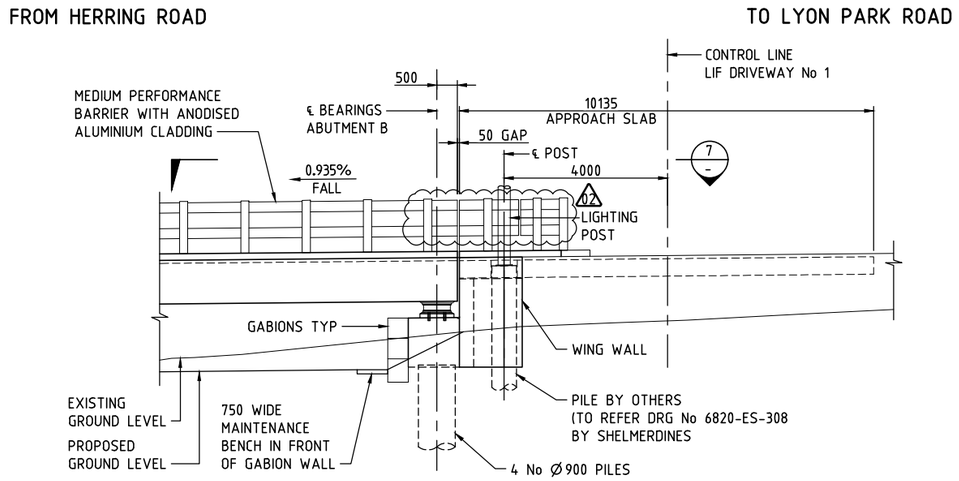

SECTION 6/106
SCALE 1:75

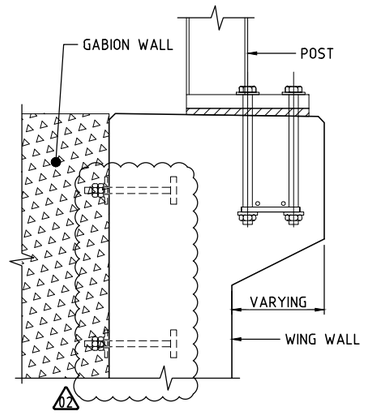

SECTION 8/-
SCALE 1:10

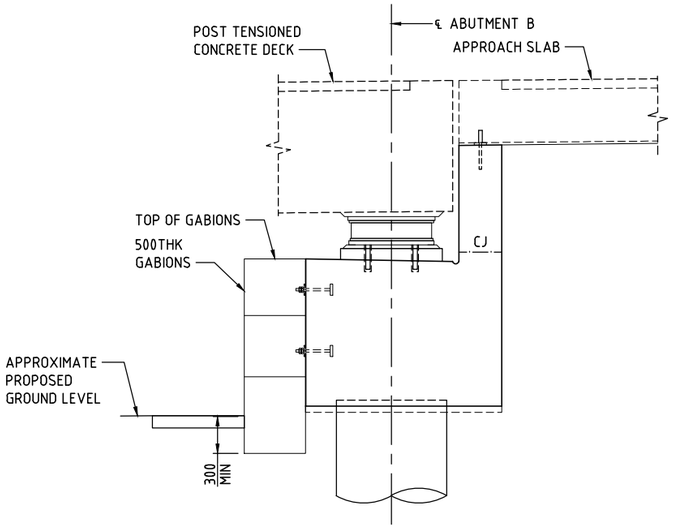

SECTION 5/106
SCALE 1:25

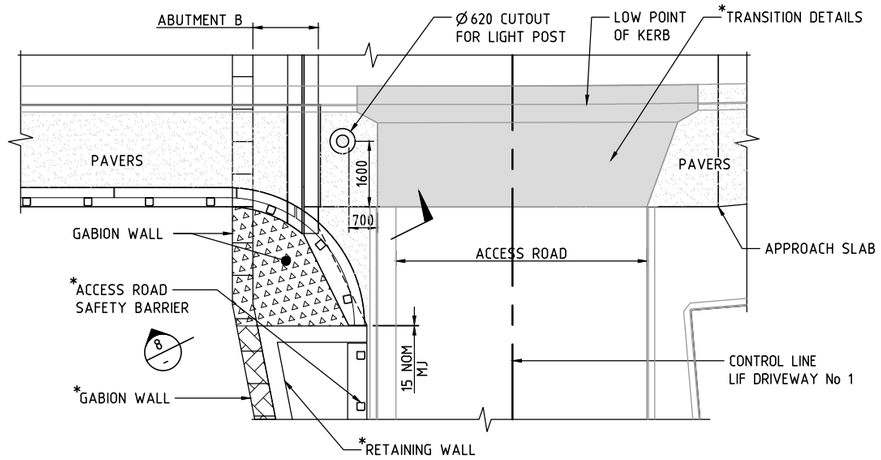

VIEW 7/107
SCALE 1:75

*FOR DETAILS REFER CIVILS DRAWINGS PREPARED BY ADW JOHNSON

These plans are referred to in certificate no. **16746** approved by:
Eric Hausfeld
Registered Certifier
Registration No: BDC 2416
Categories: Certifier – Subdivision, Certifier – Strata, Certifier – Stormwater, Certifier – Road & Drainage, Certifier – Hydraulic (stormwater)
Land Development Certificates
www.LDC.com.au

GENERAL NOTES

FOR GENERAL NOTES RELATED TO THIS DRAWING, REFER DRG No 105.

DRAWING FILE LOCATION / NAME	PLOT DATE	TIME
V:_Vault\Projects\3001\30013046\110_CADD\CAD\DWG\30013046-107.dwg	13 Oct 2021	21:57:42

EXTERNAL REFERENCE FILES: X_30013046_SMEC_A1, X_BRG_SEC, X_BRG_PLAN, X_SURV

REV	DATE	AMENDMENT / REVISION DESCRIPTION	WVR No.	APPROVAL
01	20.08.2021	ISSUED FOR TENDER	001	JD
02	14.10.2021	ISSUED FOR TENDER	002	JD

TITLE	NAME
DRAFTER	T.SABAPATHI
DRAFTING CHECK	V.S.KODURU
DESIGNER	V.S.KODURU
DESIGN CHECK	V.BALAKRISHNAN
PROJECT MANAGER	J.DICKERSON
PROJECT DIRECTOR	K.LUU

SCALES AT A1 SIZE DRAWING: 0 1000 2000 3000mm; 750 375; 1:75

DESIGNER: SMEC
Member of the Surbana Jurong Group
© ABN 47 065 475 149
LEVEL 5, 20 BERRY STREET
NORTH SYDNEY NSW 2060
SMEC PROJECT No 30013046

CLIENT: FRASERS PROPERTY

PROJECT TITLE: SHRIMPTON CREEK BRIDGE

GENERAL ARRANGEMENT
SHEET C

SCALE	PHASE	PROJECT / DRAWING No.	REVISION
AS NOTED	TENDER	30013046-107	02

150 mm ON ORIGINAL
A1

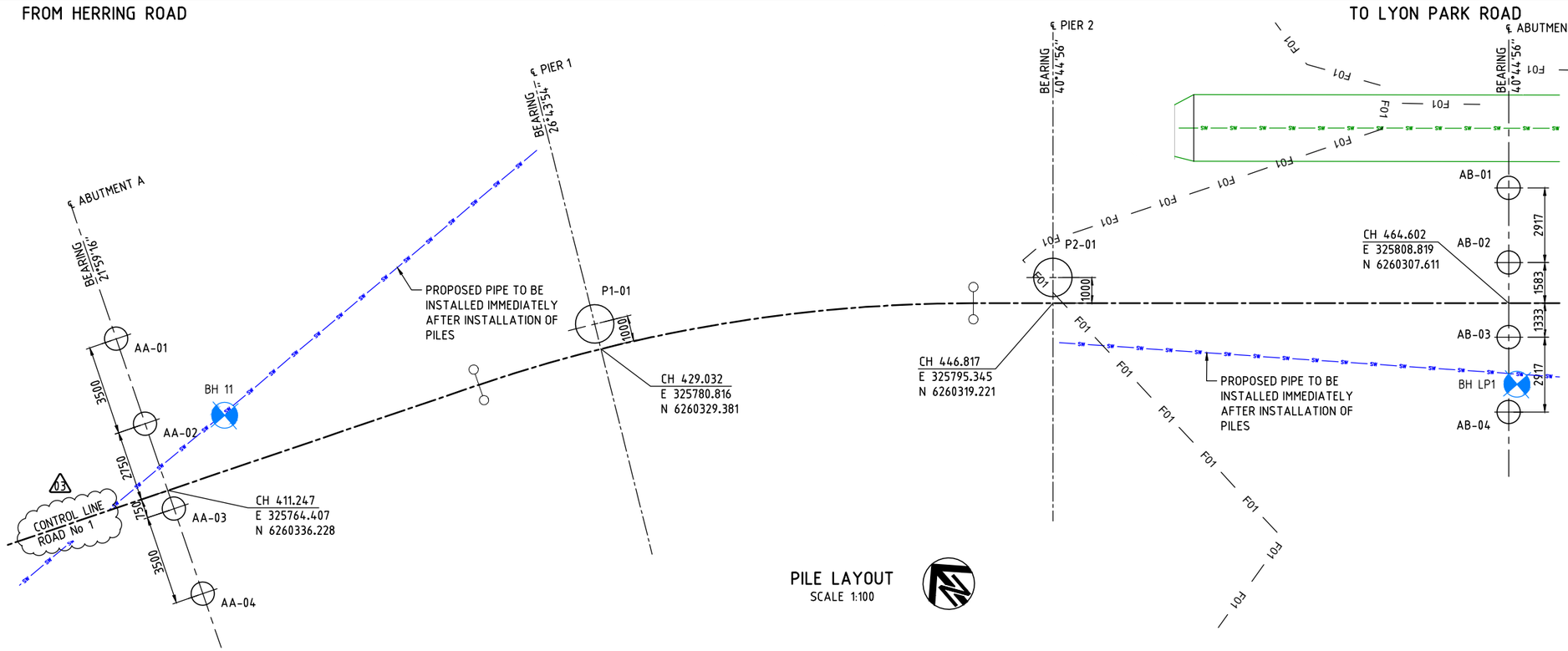

PILE LAYOUT
SCALE 1:100

GEOTECHNICAL NOTES FOR CAST-IN-PLACE PILES

THE PILING CONTRACTOR SHALL REVIEW AVAILABLE GEOTECHNICAL INVESTIGATIONS AND DETERMINE WHETHER A TEMPORARY CASING IS REQUIRED FOR THE CONSTRUCTION OF THE CAST-IN-PLACE PILES.
IF BENTONITE OR OTHER AGENCY IS USED TO SUPPORT PILE OR SOCKET FACES, THE DESIGNER SHALL BE INFORMED AND CONSIDER THE EFFECTS ON SOCKET LENGTH REQUIREMENTS.
ROCK SOCKET DESIGNS ARE BASED ON THE GEOTECHNICAL DESIGN PARAMETERS IN TABLE 2.
GEOTECHNICAL STRENGTH REDUCTION FACTOR ϕg OF 0.48 HAS BEEN ADOPTED FOR BORED PILES AND SHALL BE APPLIED TO THE ULTIMATE GEOTECHNICAL DESIGN PARAMETERS IN TABLE 2 TO DERIVE THE DESIGN ULTIMATE GEOTECHNICAL CAPACITY.
PILE DESIGN LOADS ARE PRESENTED IN TABLE 1. THE AXIAL LOADS AND MOMENTS TABULATED ARE NOT CONCURRENT BUT ARE MAXIMUM VALUES.
THE PILE EXCAVATION SHALL BE INSPECTED BY THE GEOTECHNICAL DESIGN REPRESENTATIVE (GDR) IN ORDER TO VALIDATE THE ASSUMED GROUND CONDITIONS, EFFECTIVENESS OF THE PILE TOE AND SOCKET CLEANING METHODS AND CONFIRM THAT THE MINIMUM ROCK SOCKET LENGTH HAS BEEN ACHIEVED, PRIOR TO CASTING OF CONCRETE.
PILE SOCKET LENGTH, SOCKET AND BASE MATERIAL CLASSES IN TABLE 1 ARE MINIMUM REQUIREMENTS. PILE TOE LEVELS SHOWN ARE BASED ON INTERPRETATION OF AVAILABLE SITE INVESTIGATION. THE ACTUAL PILE TOE LEVELS MAY VARY DEPENDING ON ACTUAL CONDITION. THE GDR SHALL REVIEW THE ACTUAL PROFILE OF THE ROCK SOCKET AND ADJUST THE FOUNDING LEVEL REQUIRED TO ACHIEVE THE DESIGN GEOTECHNICAL STRENGTH TO RESIST THE APPLIED STRUCTURAL LOADING.
PILE TOE LEVELS RL 'A' CAN BE VARIED FROM THE GIVEN VALUES IN TABLE 1 BY UP TO 1.0m AT THE DIRECTION OF THE GDR, PROVIDED THAT THE PILE SOCKET REQUIREMENTS IN TABLE 1 ARE ACHIEVED.
INTEGRITY TESTING SHALL BE CARRIED OUT IN ACCORDANCE WITH AS2159 AND TfNSW BRIDGE TECHNICAL DIRECTION BTD 2011/08 USING LOW STRAIN HEAD IMPACT METHODS, IE. IMPULSE RESPONSE (IR) OR PULSE ECHO (PE).
THE MINIMUM NUMBER OF PILES TO BE TESTED IS 5.
PILE DESIGN ASSUMES THAT CLASS III SANDSTONE (HIGH STRENGTH SANDSTONE) WILL NOT BE SCOURED DURING FLOODING EVENTS.

TABLE 1 - BORED CAST-IN-PLACE PILES

LOCATION	PILE No	TOE OF PILE RL 'A'	TOP OF PILE RL 'B'	LENGTH OF PILE 'L' (m)	MINIMUM TOTAL SOCKET LENGTH 'Ls'(m)	SOCKET MATERIAL 'S'/ LAYER THICKNESS (m)	FOUNDING MATERIAL 'R'	DESIGN AXIAL COMPRESSION SLS (kN)	DESIGN AXIAL COMPRESSION ULS (kN)	DESIGN MAXIMUM BENDING MOMENT (ULS) (kNm)	DESIGN MAXIMUM SHEAR (ULS) (kN)	REINFORCEMENT 'x'	REINFORCEMENT 'y'
ABUTMENT A	AA-01	38.700	44.129	5.429	1.700	CLASS III SANDSTONE (1.7m)	CLASS III SANDSTONE	1650	2400	900	450	3	23
	AA-02*											4	24
	AA-03											5	25
	AA-04*											6	26
PIER 1	P1-01*	37.900	41.466	3.566	2.500	CLASS III SANDSTONE (2.5m)		9100	12600	3700	1350	7	27
PIER 2	P2-01*	37.000	40.102	3.102	2.500	CLASS III SANDSTONE (2.5m)						8	28
ABUTMENT B	AB-01	41.400	44.628	3.228	2.400	CLASS V SANDSTONE (1.3m) CLASS III SANDSTONE (1.1m)		1750	2200	400	325	9	29
	AB-02*											10	30
	AB-03											11	31
	AB-04											12	32

1. TABULATED DESIGN LOADS ARE MAXIMUM OF EACH ABUTMENT AND PIER AND ARE NOT CONCURRENT.
* INDICATES PILES NOMINATED FOR INTEGRITY TESTING.

TABLE 2 - SANDSTONE CLASSIFICATION AND DESIGN PARAMETERS

CLASS	SANDSTONE CLASSIFICATION UCS (MPa)	DEFECT SPACING	ALLOWABLE SEAMS	DESIGN PARAMETERS ULTIMATE END BEARING (MPa)	SERVICEABILITY END BEARING (MPa)	ULTIMATE SHAFT ADHESION (kPa)
CLASS V SANDSTONE	>1	N.A	N.A	3	0.8	150
CLASS III SANDSTONE	>7	>200	<5%	20	3.5	800
CLASS II SANDSTONE	>12	>200	<3%	60	6.0	1500

1. UCS DENOTES UNCONFINED COMPRESSIVE STRENGTH.
2. UCS CAN BE CORRELATED TO POINT LOAD STRENGTH INDEX $I_{S(50)}$. USING A CORRELATION OF UCS = 20 Is(50).
3. # DESIGN PARAMETERS HAVE BEEN REVIEWED AND AMENDED TO REFLECT SITE SPECIFIC CONDITIONS.

GENERAL NOTES

CONCRETE EXPOSURE CLASSIFICATION: B1
MINIMUM 28 DAYS COMPRESSIVE STRENGTH OF CONCRETE SHALL BE 40MPa.
THE PLACING OF CONCRETE IN THE PILES SHALL BE CARRIED OUT IN ONE CONTINUOUS OPERATION UNLESS OTHERWISE SPECIFIED.
ALL SETTING OUT INFORMATION SHALL BE CHECKED BY THE CONTRACTOR ON SITE PRIOR TO CONSTRUCTION.

REINFORCEMENT NOTES

NOMINAL COVER TO REINFORCEMENT NEAREST TO THE CONCRETE SURFACE OF BORED PILE SHALL BE 75mm UNLESS NOTED OTHERWISE.
UNLESS NOTED OTHERWISE THE MINIMUM LAP LENGTHS OF BARS SHALL BE AS FOLLOWS:

BAR SIZE:	N12	N16	N20	N24	N28	N32	N36
a) HORIZONTAL BARS WITH >300mm OF CONCRETE CAST BELOW THE BAR	650	900	1150	1430	1730	2060	2410
b) OTHER BARS	500	690	890	1100	1330	1590	1860

CLEAR DISTANCE BETWEEN LAPPED BARS SHALL NOT EXCEED 3 x THE SMALLEST BAR DIAMETER.
REINFORCEMENT MAY BE DISPLACED SLIGHTLY WHERE NECESSARY TO CLEAR DOWELS, ANCHORS, LIFTING ANCHORS, DUCTS, DRAINAGE LINES AND GENERAL FITMENTS.
REINFORCING BARS IN PILES SHALL BE ELECTRICALLY CONNECTED.
ELECTRICAL CONNECTIVITY OF REINFORCEMENT AND FITMENTS SHALL BE DEMONSTRATED IN ACCORDANCE WITH AS2832.5.
REINFORCING BARS AND STARTER BARS IN PILES MAY BE LAPPED ON THE INSIDE USING CRANKED BARS.
FOR REINFORCEMENT NOTES REFER DRG No 112.

LEGEND

BOREHOLE (REFER DOUGLAS PARTNERS REPORT No 86043.01 DEC 2017)
F01 FENCE 01

PROPOSED UTILITIES

SW PROPOSED STORMWATER

EXISTING SERVICES TO REMAIN

SW UNDERGROUND STORMWATER PIPE (QL D)

These plans are referred to in certificate no. **16746** approved by:
Eric Hausfeld
Registered Certifier
Registration No: BDC 2416
Categories: Certifier – Subdivision, Certifier – Strata, Certifier – Stormwater, Certifier – Road & Drainage, Certifier – Hydraulic (stormwater)
Land Development Certificates
www.LDC.com.au

DRAWING FILE LOCATION / NAME	PLOT DATE	TIME
V:_Vault\Projects\3001\30013046\110_CADD\CAD\DWG\30013046-111.dwg	14 Oct 2021	00:02:29

EXTERNAL REFERENCE FILES: X_30013046_SMEC_A1, X_DES_MAN, X_BRG_PLAN, X_PROP_SERVICES, X_EXISTING_SERVICES, X_PROP_BORE LOG

REV	DATE	AMENDMENT / REVISION DESCRIPTION	WVR No.	APPROVAL
01	10.07.2021	ISSUED FOR TENDER	001	JD
02	20.08.2021	ISSUED FOR TENDER	001	JD
03	14.10.2021	ISSUED FOR TENDER	002	JD

TITLE	NAME
DRAFTER	T.SABAPATHI
DRAFTING CHECK	V.S.KODURU
DESIGNER	V.S.KODURU
DESIGN CHECK	V.BALAKRISHNAN
PROJECT MANAGER	J.DICKERSON
PROJECT DIRECTOR	K.LUU

SCALES AT A1 SIZE DRAWING: 0 1000 2000 3000 4000 5000mm; 1000 500; 1:100

DESIGNER: SMEC
Member of the Surbana Jurong Group
© ABN 47 065 475 149
LEVEL 5, 20 BERRY STREET
NORTH SYDNEY NSW 2060
SMEC PROJECT No 30013046

CLIENT: FRASERS PROPERTY

PROJECT TITLE: SHRIMPTON CREEK BRIDGE
PILING LAYOUT

SCALE	PHASE	PROJECT / DRAWING No.	REVISION
AS NOTED	TENDER	30013046-111	03

150 mm ON ORIGINAL
A1

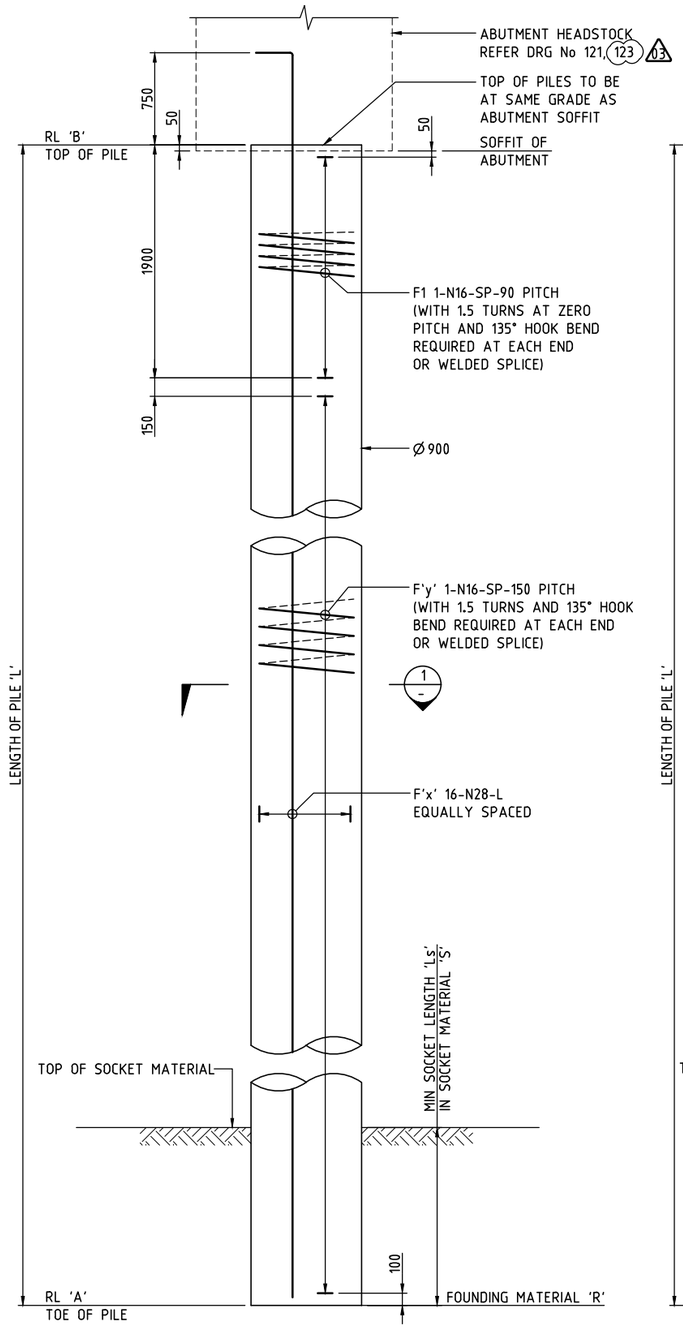

ELEVATION

SCALE 1:25

FOR VALUES OF RL 'A', RL 'B', 'L', 'Ls', 'R', 'S', 'x' AND 'y', REFER TABLE 1 ON DRG No 111

PILE AT ABUTMENTS

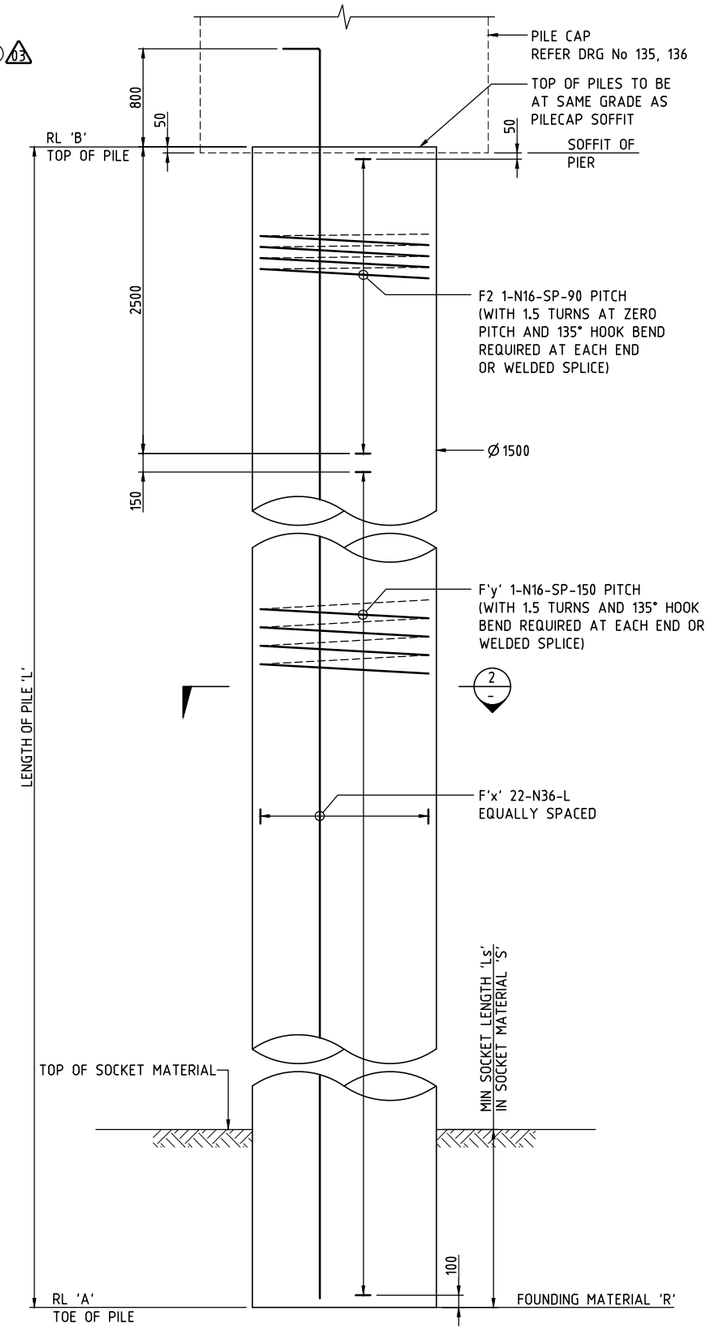

ELEVATION

SCALE 1:25

FOR VALUES RL 'A', RL 'B', 'L', 'Ls', 'R', 'S' 'x' AND 'y', REFER TABLE 1 ON DRG No 111

PILE AT PIERS

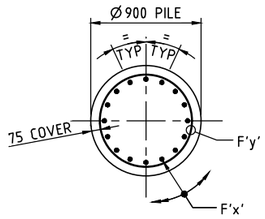

SECTION 1

SCALE 1:25

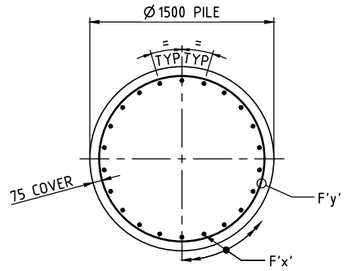

SECTION 2

SCALE 1:25

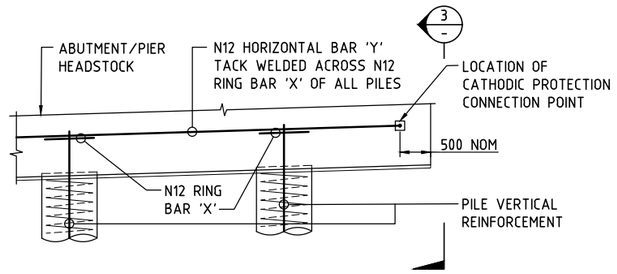

ELEVATION

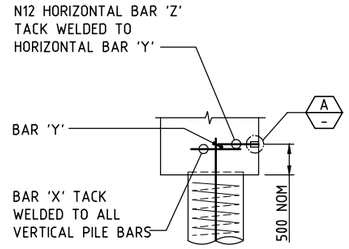

VIEW 3

SCALE 1:50

DETAILS OF CATHODIC PROTECTION AT ABUTMENT PILES 03

NOT TO SCALE

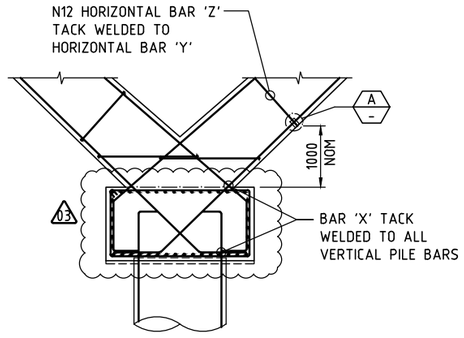

DETAILS OF CATHODIC PROTECTION AT PIER PILES 03

NOT TO SCALE

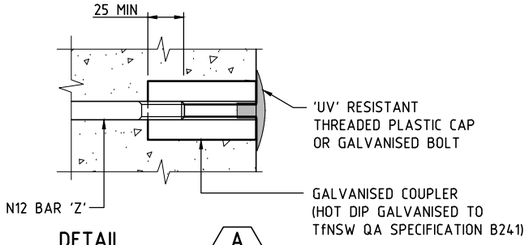

DETAIL A

SCALE 1:2

These plans are referred to in certificate no. **16746** approved by:
Eric Hausfeld
Registered Certifier
Registration No: BDC 2416
Categories: Certifier – Subdivision; Certifier – Strata; Certifier – Stormwater; Certifier – Road & Drainage; Certifier – Hydraulic (stormwater)
Land Development Certificates
www.LDC.com.au

GENERAL NOTES

FOR GENERAL NOTES RELATING TO THIS DRAWING, REFER DRG No 111.

DRAWING FILE LOCATION / NAME: V:_Vault\Projects\3001\30013046\110_CADD\CAD\DWG\30013046-112.dwg

PLOT DATE: 14 Oct 2021 TIME: 00:02:21

EXTERNAL REFERENCE FILES: X_30013046_SMEC_A1

REV	DATE	AMENDMENT / REVISION DESCRIPTION	WVR No.	APPROVAL
01	10.07.2021	ISSUED FOR TENDER	001	JD
02	20.08.2021	ISSUED FOR TENDER	001	JD
03	14.10.2021	ISSUED FOR TENDER	002	JD

TITLE	NAME
DRAFTER	T.SABAPATHI
DRAFTING CHECK	V.S.KODURU
DESIGNER	V.S.KODURU
DESIGN CHECK	V.BALAKRISHNAN
PROJECT MANAGER	J.DICKERSON
PROJECT DIRECTOR	K.LUU

SCALES AT A1 SIZE DRAWING: 0 250 125 500 1000mm 1:25

DESIGNER: SMEC
Member of the Surbana Jurong Group
© ABN 47 065 475 149
LEVEL 5, 20 BERRY STREET
NORTH SYDNEY NSW 2060
SMEC PROJECT No 30013046

CLIENT: FRASERS PROPERTY

PROJECT TITLE: SHRIMPTON CREEK BRIDGE

PILE DETAILS

SCALE	PHASE	PROJECT / DRAWING No.	REVISION
AS NOTED	TENDER	30013046-112	03

150 mm ON ORIGINAL
A1

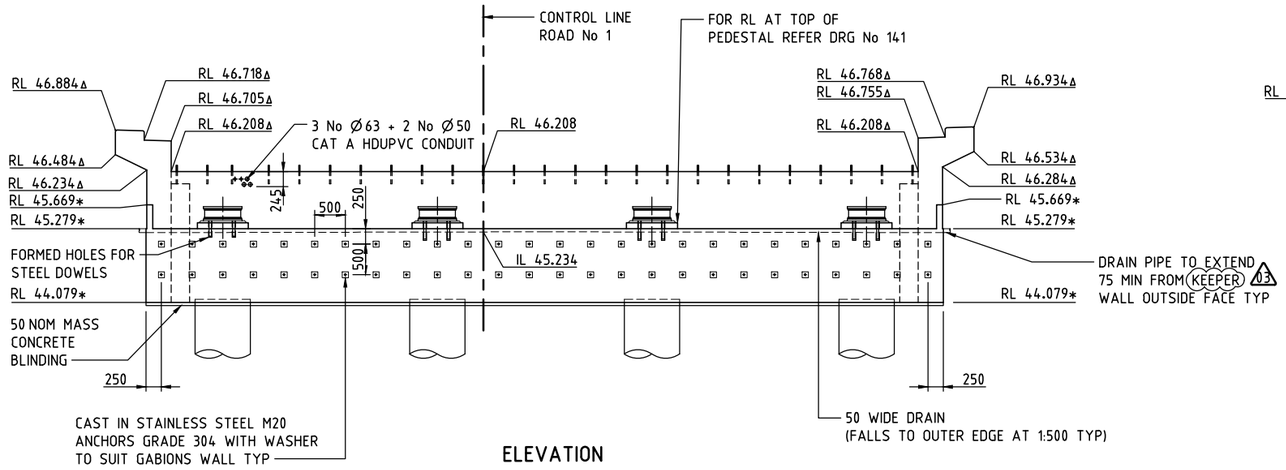

ELEVATION

SCALE 1:50

BARRIER NOT SHOWN FOR CLARITY.
* DENOTES RL OF FRONT FACE OF HEADSTOCK.
Δ DENOTES RL OF FRONT FACE OF CURTAIN WALL.

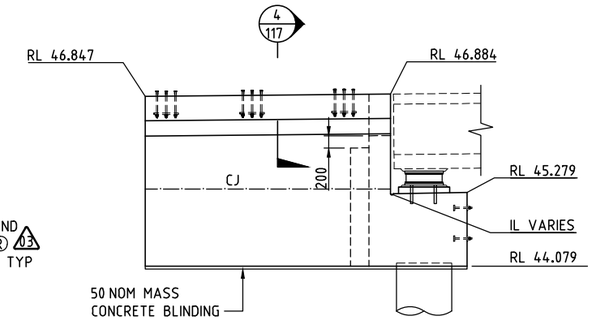

VIEW 2

SCALE 1:50

(KEEPER WALL NOT SHOWN FOR CLARITY)

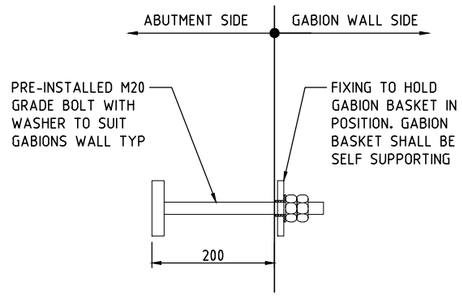

TYPICAL PRE-INSTALLED ANCHOR BOLT DETAILS

SCALE 1:5

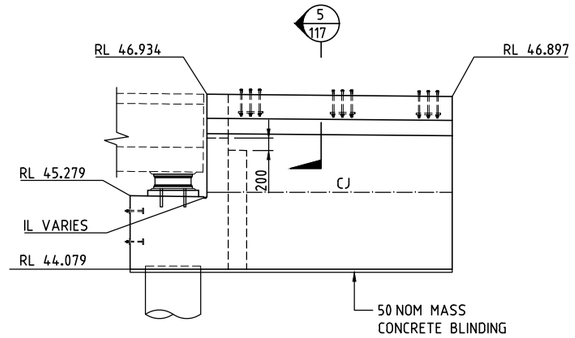

VIEW 3

SCALE 1:50

(KEEPER WALL NOT SHOWN FOR CLARITY)

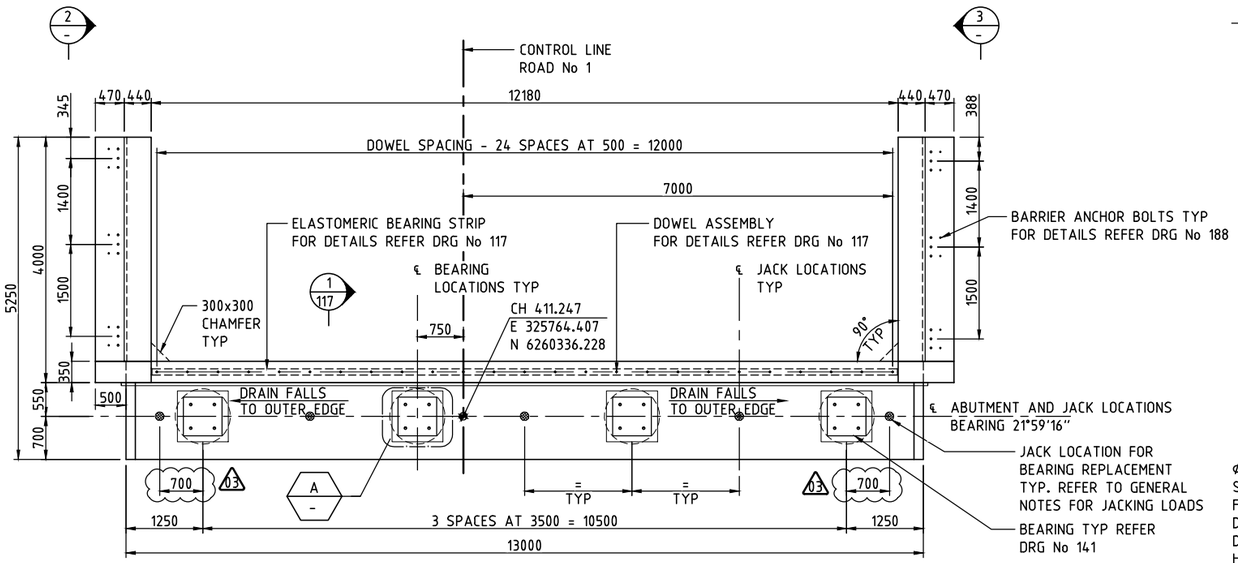

PLAN

SCALE 1:50

ABUTMENT A

PRE-INSTALLED ANCHOR BOLT NOT SHOWN FOR CLARITY

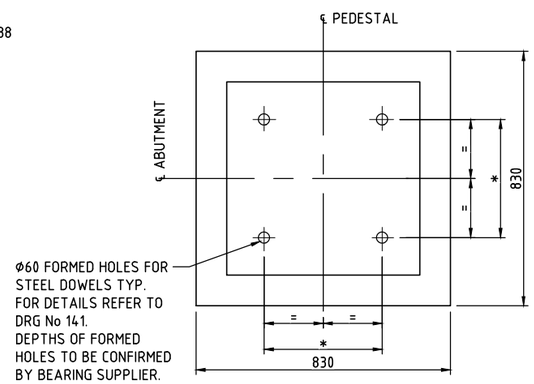

DETAIL A B

SCALE 1:10

* DENOTES DISTANCE BETWEEN THE DOWELS
REFER DRG No 141 FOR DETAILS

GENERAL NOTES

ALL DIMENSIONS ARE IN MILLIMETRES UNLESS NOTED OTHERWISE.
CONCRETE EXPOSURE CLASSIFICATION: B1.
MINIMUM 28 DAYS COMPRESSIVE STRENGTH OF CONCRETE SHALL BE 40 MPa.
MINIMUM 28 DAYS COMPRESSIVE STRENGTH OF MASS CONCRETE SHALL BE 20 MPa.
EDGES SHALL BE CHAMFERED 20 x 20 AND RE-ENTRANT ANGLES FILLETED 20 x 20 UNO.
CJ DENOTES CONSTRUCTION JOINT.
◎ DENOTES JACKING POINT FOR BEARING REPLACEMENT.
MAXIMUM JACKING LOADS PER JACK SHALL BE:
03 SLS = 1250 kN
ULS = 1850 kN
EXPOSED CONCRETE SURFACE TO HAVE SMOOTH FINISH.
FOR STAINLESS STEEL ANCHOR NOTES REFER DRAWING No 223.
DOWELS IN THE ABUTMENT CONCRETE MAY BE DISPLACED SLIGHTLY WHERE NECESSARY TO CLEAR ELECTRICAL DUCTS.

DURABILITY NOTES

MAXIMUM TOTAL BINDER CONTENT SHALL BE KEPT AT 430kg/m^3 WITH TYPE GB CEMENT WITH 65.5% GROUND GRANULAR BLAST-FURNACE SLAG.
USE 36mm THICK PLYWOOD FORMWORK OR PROVIDE INSULATION TO FORMWORK CONSTRUCTED WITH OTHER MATERIALS TO ACHIEVE AN OVERALL SURFACE CONDUCTANCE LESS THAN 3.0W/m^2 °C.
MAXIMUM CONCRETE PLACEMENT TEMPERATURE SHALL NOT EXCEED 27°C.
TOP SURFACE OF THE ABUTMENT HEADSTOCKS SHALL BE COVERED WITH 20mm THICK POLYSTYRENE FOAM OR EQUIVALENT AFTER CASTING. THE INSULATION SHALL BE REMOVED AT THE SAME TIME AS THE FORMWORK.
FORMWORK SHALL BE REMOVED NOT EARLIER THAN 216 HOURS.
THERMOCOUPLES SHOULD BE LOCATED WITHIN THE CONCRETE MEMBER BEING CONSTRUCTED. (ONE AT CENTRE AND ONE BELOW SURFACE WITH THE LAST DIMENSION).

These plans are referred to in certificate no. 16746 approved by:
Eric Hausfeld
Registered Certifier
Registration No: BDC 2416
Categories: Certifier – Subdivision, Certifier – Strata, Certifier – Stormwater, Certifier – Road & Drainage, Certifier – Hydraulic (stormwater)
Land Development Certificates
www.LDC.com.au

DRAWING FILE LOCATION / NAME: V:_Vault\Projects\3001\30013046\110_CADD\CAD\DWG\30013046-115.dwg
PLOT DATE: 14 Oct 2021 TIME: 00:02:11

EXTERNAL REFERENCE FILES: X_30013046_SMEC_A1 X_BRG_PLAN

REV	DATE	AMENDMENT / REVISION DESCRIPTION	WVR No.	APPROVAL
01	10.07.2021	ISSUED FOR TENDER	001	JD
02	20.08.2021	ISSUED FOR TENDER	001	JD
03	14.10.2021	ISSUED FOR TENDER	002	JD

TITLE	NAME
DRAFTER	T.SABAPATHI
DRAFTING CHECK	V.S.KODURU
DESIGNER	V.S.KODURU
DESIGN CHECK	V.BALAKRISHNAN
PROJECT MANAGER	J.DICKERSON
PROJECT DIRECTOR	K.LUU

SCALES AT A1 SIZE DRAWING: 0 1000 2000mm; 500 250 1:50

DESIGNER: SMEC
Member of the Surbana Jurong Group
© ABN 47 065 475 149
LEVEL 5, 20 BERRY STREET
NORTH SYDNEY NSW 2060
SMEC PROJECT No 30013046

CLIENT: FRASERS PROPERTY

PROJECT TITLE: SHRIMPTON CREEK BRIDGE
ABUTMENT CONCRETE
SHEET A

SCALE	PHASE	PROJECT / DRAWING No.	REVISION
AS NOTED	TENDER	30013046-115	03

150 mm ON ORIGINAL
A1

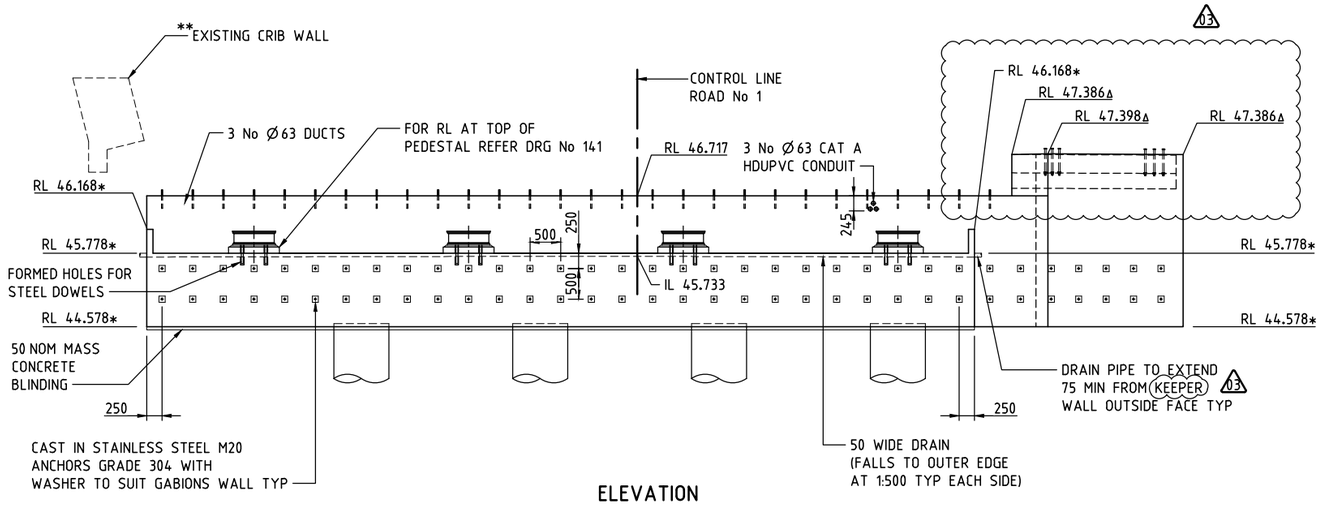

ELEVATION

SCALE 1:50

BARRIER NOT SHOWN FOR CLARITY.
* DENOTES RL OF FRONT FACE OF HEADSTOCK.
** STABILITY OF EXISTING CRIB WALL TO BE MAINTAINED BY CONTRACTOR DURING CONSTRUCTION.
Δ DENOTES RL OF FRONT FACE OF CURTAIN WALL.

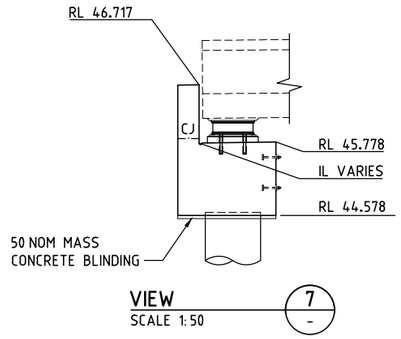

VIEW 7

SCALE 1:50

(KEEPER WALL NOT SHOWN FOR CLARITY)

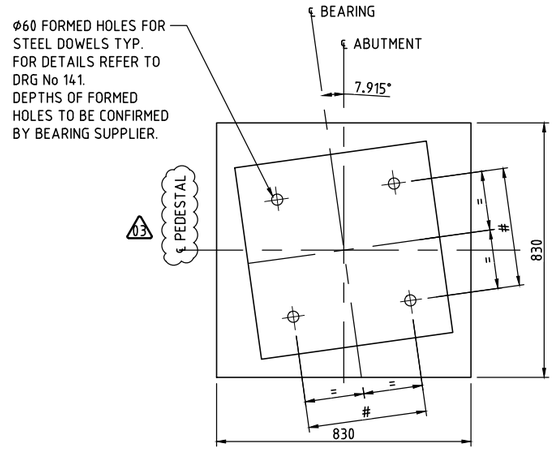

DETAIL C

SCALE 1:10

# DENOTES DISTANCE BETWEEN THE DOWELS REFER DRG NO 141 FOR DETAILS

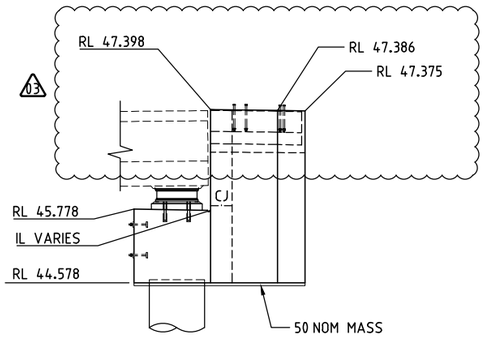

VIEW 8

SCALE 1:50

(KEEPER WALL NOT SHOWN FOR CLARITY)

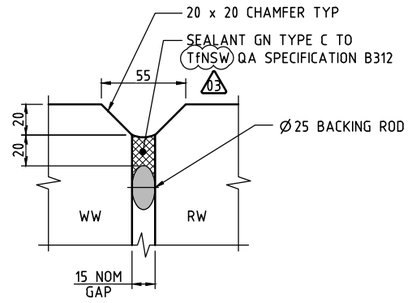

TYPICAL INTERFACE DETAILS FOR MOVEMENT JOINT

SCALE 1:2

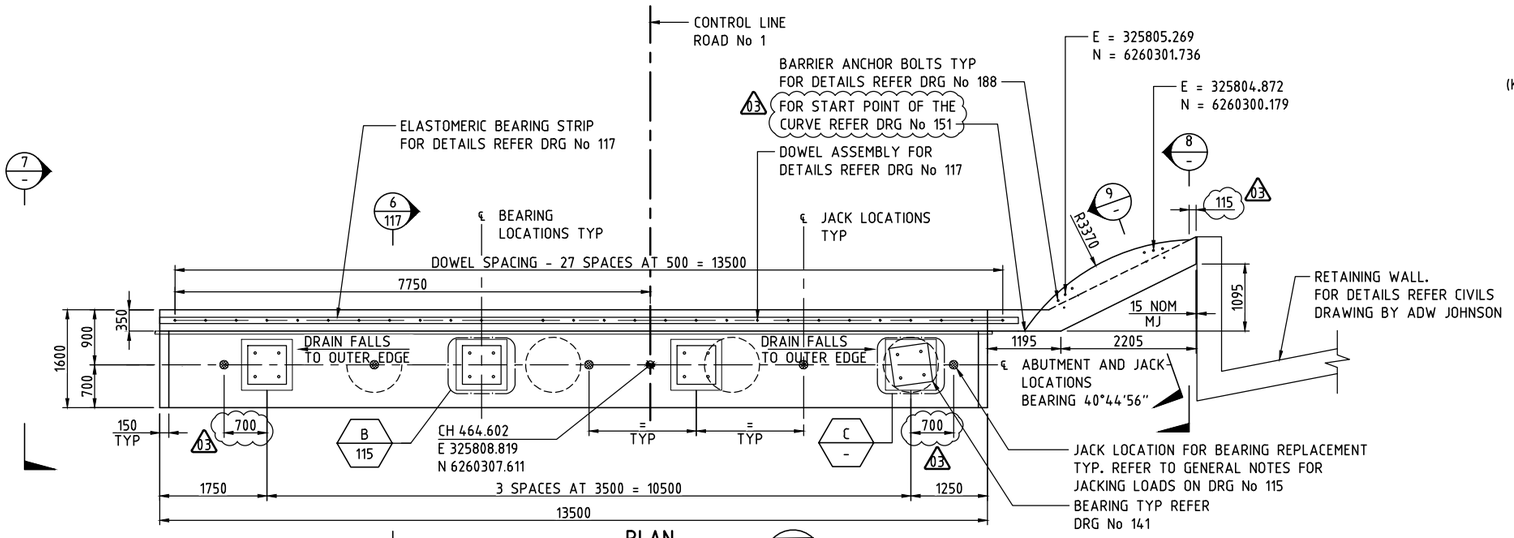

PLAN

SCALE 1:50

ABUTMENT B

PRE-INSTALLED ANCHOR BOLT NOT SHOWN FOR CLARITY

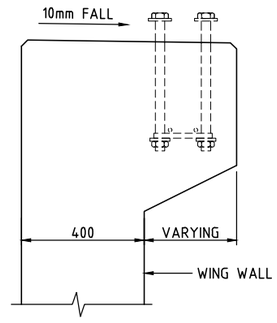

SECTION 9

SCALE 1:10

These plans are referred to in certificate no. **16746** approved by:
Eric Hausfeld
Registered Certifier
Registration No: BDC 2416
Categories: Certifier – Subdivision, Certifier – Strata, Certifier – Stormwater, Certifier – Road & Drainage, Certifier – Hydraulic (stormwater)
Land Development Certificates
www.LDC.com.au

GENERAL NOTES

FOR GENERAL NOTES RELATED TO THIS DRAWING, REFER DRG No 115.
MJ DENOTES MOVEMENT JOINT.
WW DENOTES WING WALL.
RW DENOTES RETAINING WALL.

DRAWING FILE LOCATION / NAME	PLOT DATE	TIME
V:_Vault\Projects\3001\30013046\110_CADD\CAD\DWG\30013046-116.dwg	13 Oct 2021	21:57:33

EXTERNAL REFERENCE FILES: X_30013046_SMEC_A1, X_BRG_PLAN

REV	DATE	AMENDMENT / REVISION DESCRIPTION	WVR No.	APPROVAL
01	10.07.2021	ISSUED FOR TENDER	001	JD
02	20.08.2021	ISSUED FOR TENDER	001	JD
03	14.10.2021	ISSUED FOR TENDER	002	JD

TITLE	NAME
DRAFTER	T.SABAPATHI
DRAFTING CHECK	V.S.KODURU
DESIGNER	V.S.KODURU
DESIGN CHECK	V.BALAKRISHNAN
PROJECT MANAGER	J.DICKERSON
PROJECT DIRECTOR	K.LUU

SCALES AT A1 SIZE DRAWING: 0 1000 2000mm; 500 250; 1:50

DESIGNER: SMEC
Member of the Surbana Jurong Group
© ABN 47 065 475 149
LEVEL 5, 20 BERRY STREET
NORTH SYDNEY NSW 2060
SMEC PROJECT No 30013046

CLIENT: FRASERS PROPERTY

PROJECT TITLE: SHRIMPTON CREEK BRIDGE
ABUTMENT CONCRETE SHEET B

SCALE	PHASE	PROJECT / DRAWING No.	REVISION
AS NOTED	TENDER	30013046-116	03

150 mm ON ORIGINAL
A1

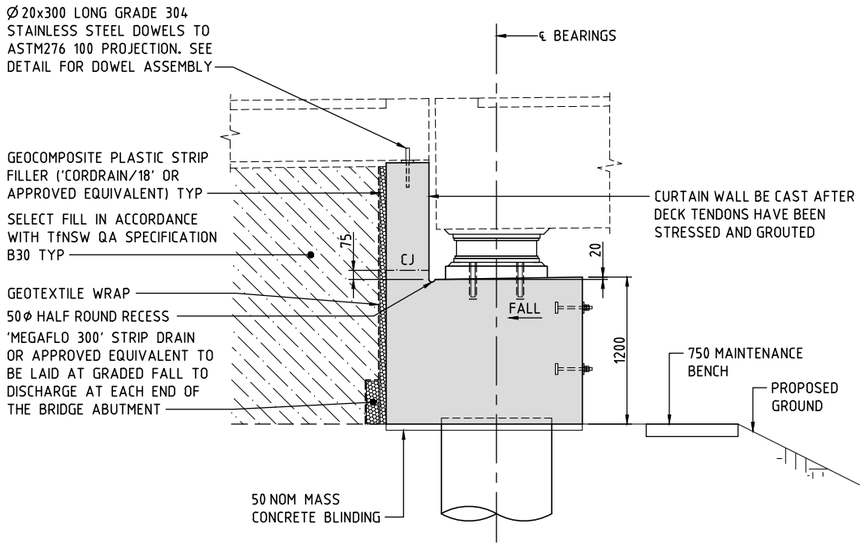

SECTION 1/115
SCALE 1:25

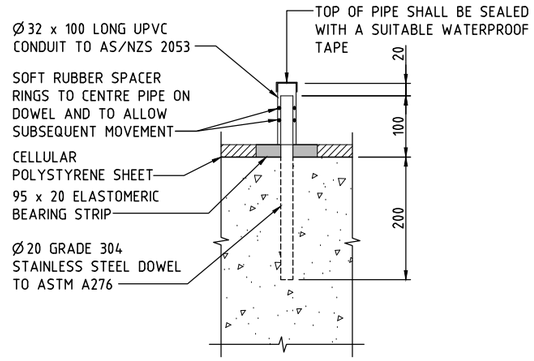

DOWEL ASSEMBLY
SCALE 1:5
A SUITABLE ALTERNATIVE TYPE OF DOWEL CAP MAY BE USED
51 No REQUIRED

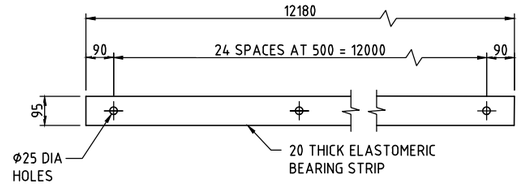

ELASTOMERIC BEARING STRIP - ABUTMENT A
SCALE 1:10
1 No REQUIRED

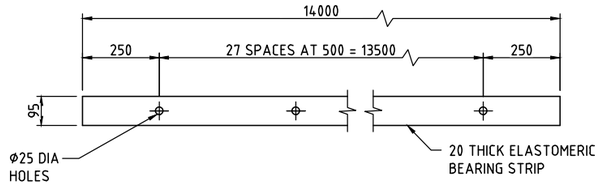

ELASTOMERIC BEARING STRIP - ABUTMENT B
SCLAE 1:10
1 No REQUIRED

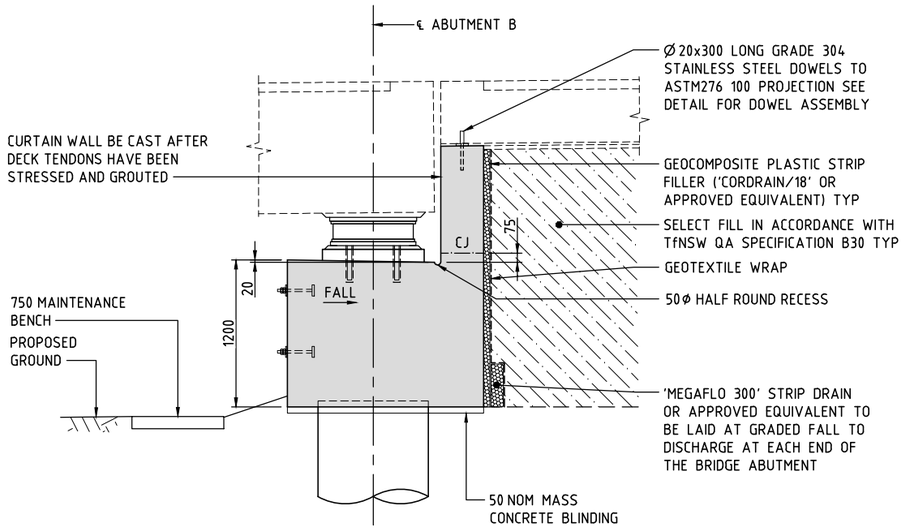

SECTION 6/116
SCALE 1:25

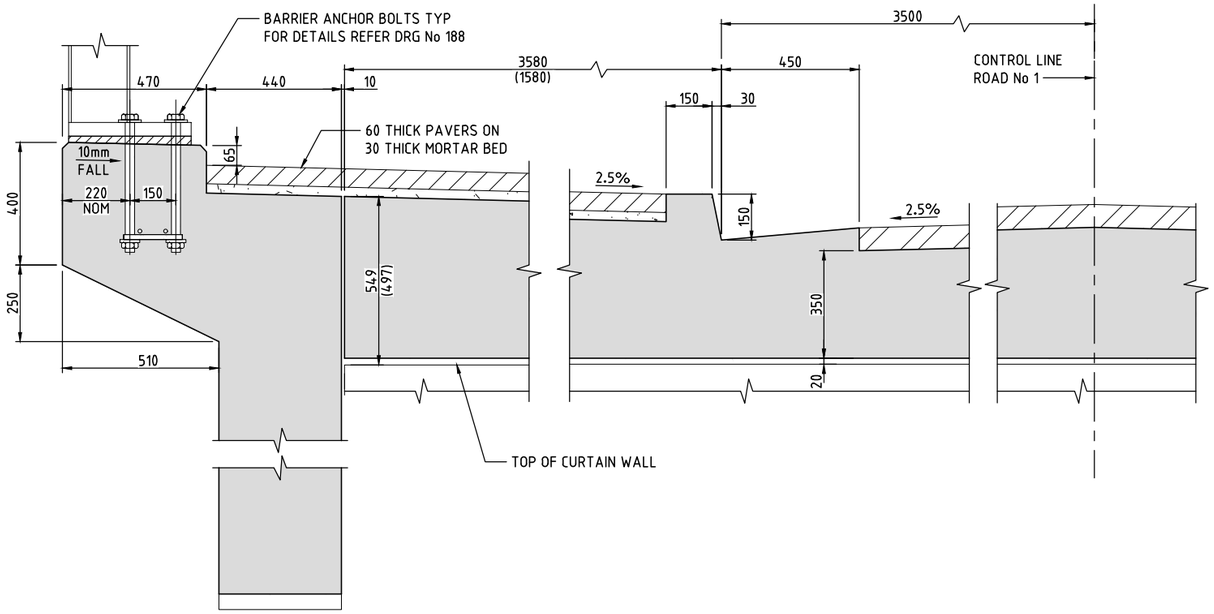

SECTION 4/115 5/115 SIMILAR BUT TO OPPOSITE HAND
SCALE 1:10

DRAWN FOR SECTION 4 FIGURES IN BRACKETS REFER TO SECTION 5

These plans are referred to in certificate no. **16746** approved by:
Eric Hausfeld
Registered Certifier
Registration No: BDC 2416
Categories: Certifier – Subdivision, Certifier – Strata, Certifier – Stormwater, Certifier – Road & Drainage, Certifier – Hydraulic (stormwater)
Land Development Certificates
www.LDC.com.au

GENERAL NOTES

FOR GENERAL NOTES RELATED TO THIS DRAWING, REFER DRG No 115.

DRAWING FILE LOCATION / NAME: V:_Vault\Projects\3001\30013046\110_CADD\CAD\DWG\30013046-117.dwg
PLOT DATE: 14 Oct 2021 TIME: 00:01:56

EXTERNAL REFERENCE FILES: X_30013046_SMEC_A1

REV	DATE	AMENDMENT / REVISION DESCRIPTION	WVR No.	APPROVAL
01	10.07.2021	ISSUED FOR TENDER	001	JD
02	20.08.2021	ISSUED FOR TENDER	001	JD

TITLE	NAME
DRAFTER	T.SABAPATHI
DRAFTING CHECK	V.S.KODURU
DESIGNER	V.S.KODURU
DESIGN CHECK	V.BALAKRISHNAN
PROJECT MANAGER	J.DICKERSON
PROJECT DIRECTOR	K.LUU

SCALES AT A1 SIZE DRAWING: 0 500 1000mm; 250 125; 1:25

DESIGNER: SMEC
Member of the Surbana Jurong Group
© ABN 47 065 475 149
LEVEL 5, 20 BERRY STREET
NORTH SYDNEY NSW 2060
SMEC PROJECT No 30013046

CLIENT: FRASERS PROPERTY

PROJECT TITLE: SHRIMPTON CREEK BRIDGE
ABUTMENT CONCRETE SHEET C

SCALE	PHASE	PROJECT / DRAWING No.	REVISION
AS NOTED	TENDER	30013046-117	02

150 mm ON ORIGINAL
A1

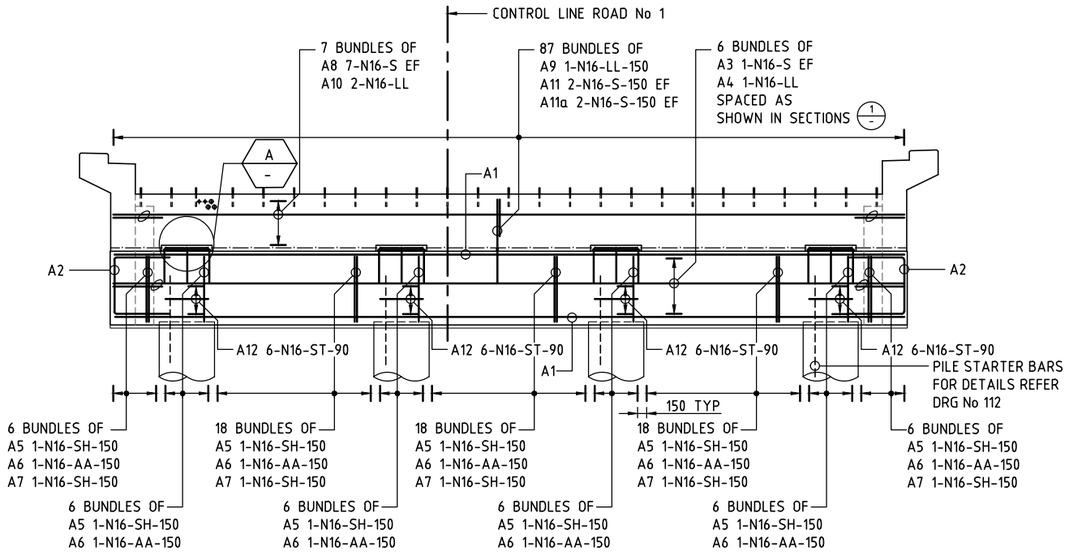

ELEVATION
SCALE 1:50

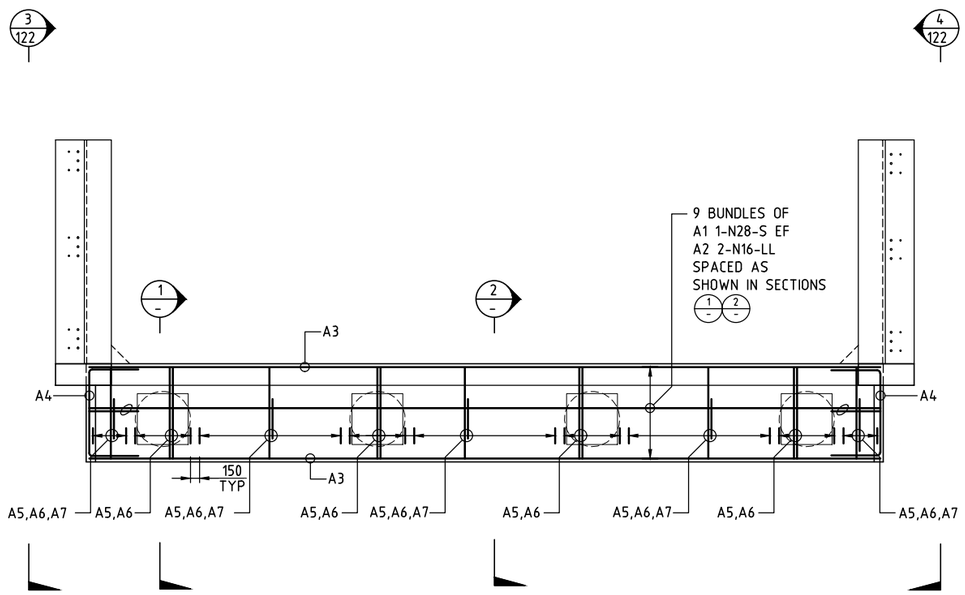

PLAN
SCALE 1:50
RETURN WALL REINFORCEMENT NOT SHOWN FOR CLARITY

ABUTMENT A

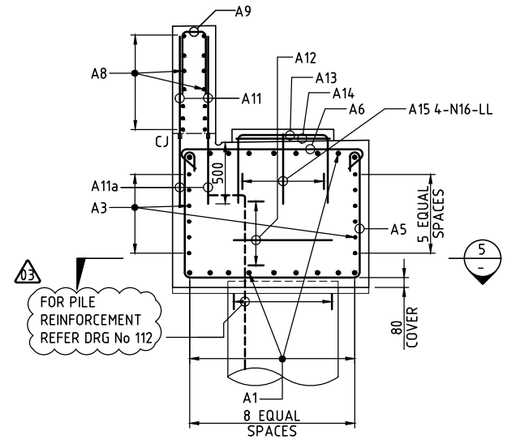

SECTION 1/-
SCALE 1:25

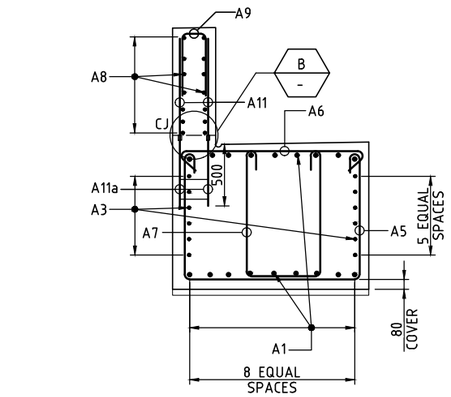

SECTION 2/-
SCALE 1:25

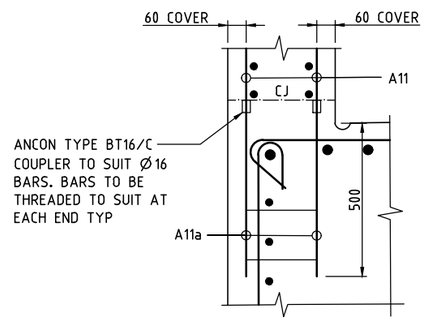

DETAIL B/-
SCALE 1:10

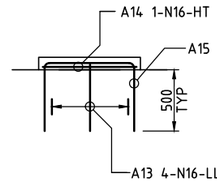

DETAIL A/-
SCALE 1:25

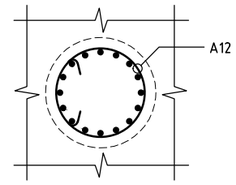

SECTION 5/-
SCALE 1:25

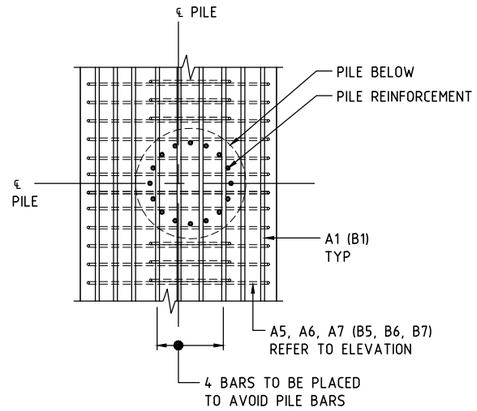

REINFORCEMENT ARRANGEMENT AT PILES/ABUTMENT
SCALE 1:25
ABUTMENT A SHOWN, ABUTMENT B SIMILAR
VALUES IN BRACKETS REFER TO ABUTMENT B

GENERAL NOTES
NOMINAL COVER TO REINFORCEMENT NEAREST TO THE CONCRETE SURFACE SHALL BE 45mm UNLESS NOTED OTHERWISE.
UNLESS NOTED OTHERWISE THE MINIMUM LAP LENGTHS OF BARS SHALL BE AS FOLLOWS:

BAR SIZE:	N12	N16	N20	N24	N28	N32	N36
a) HORIZONTAL BARS WITH >300mm OF CONCRETE CAST BELOW THE BAR	650	900	1150	1430	1730	2060	2410
b) OTHER BARS	500	690	890	1100	1330	1590	1860

CLEAR DISTANCE BETWEEN LAPPED BARS SHALL NOT EXCEED 3 x THE BAR DIAMETER.
REINFORCEMENT MAY BE DISPLACED SLIGHTLY WHERE NECESSARY TO CLEAR DOWELS, ANCHORS, LIFTING DEVICES, DUCTS, DRAINAGE LINES AND GENERAL FITMENTS.
THE HEADSTOCK LONGITUDINAL REINFORCEMENT BARS SHALL NOT BE LAPPED AT THE PILE LOCATIONS.
FOR REINFORCEMENT NOTES REFER DRG No 215.

These plans are referred to in certificate no. **16746** approved by:
Eric Hausfeld
Registered Certifier
Registration No: BDC 2416
Categories: Certifier – Subdivision, Certifier – Strata, Certifier – Stormwater, Certifier – Road & Drainage, Certifier – Hydraulic (stormwater)
Land Development Certificates
www.LDC.com.au

DRAWING FILE LOCATION / NAME: V:_Vault\Projects\3001\30013046\110_CADD\CAD\DWG\30013046-121.dwg
PLOT DATE: 13 Oct 2021 TIME: 21:57:23

EXTERNAL REFERENCE FILES: X_30013046_SMEC_A1, X_BRG_PLAN

REV	DATE	AMENDMENT / REVISION DESCRIPTION	WVR No.	APPROVAL
01	10.07.2021	ISSUED FOR TENDER	001	JD
02	20.08.2021	ISSUED FOR TENDER	001	JD
03	14.10.2021	ISSUED FOR TENDER	002	JD

TITLE	NAME
DRAFTER	T.SABAPATHI
DRAFTING CHECK	V.S.KODURU
DESIGNER	V.S.KODURU
DESIGN CHECK	V.BALAKRISHNAN
PROJECT MANAGER	J.DICKERSON
PROJECT DIRECTOR	K.LUU

SCALES AT A1 SIZE DRAWING: 0 1000 2000mm; 500 250; 1:50

DESIGNER: SMEC
Member of the Surbana Jurong Group
© ABN 47 065 475 149
LEVEL 5, 20 BERRY STREET
NORTH SYDNEY NSW 2060
SMEC PROJECT No 30013046

CLIENT: FRASERS PROPERTY

PROJECT TITLE: SHRIMPTON CREEK BRIDGE
ABUTMENT REINFORCEMENT
SHEET A

SCALE	PHASE	PROJECT / DRAWING No.	REVISION
AS NOTED	TENDER	30013046-121	03

150 mm ON ORIGINAL
A1

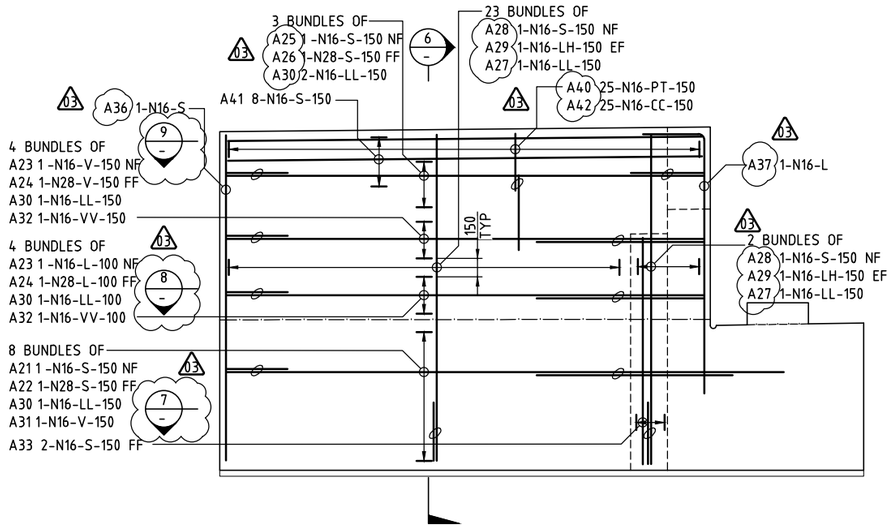

VIEW 3/121 4/121 SIMILAR BUT OPPOSITE HAND
SCALE 1:25

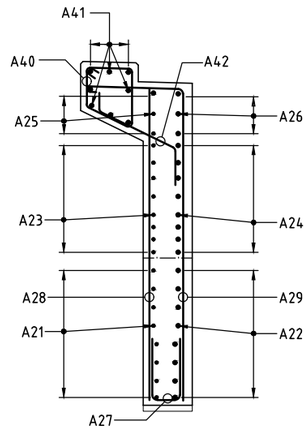

SECTION 6/-
SCALE 1:25

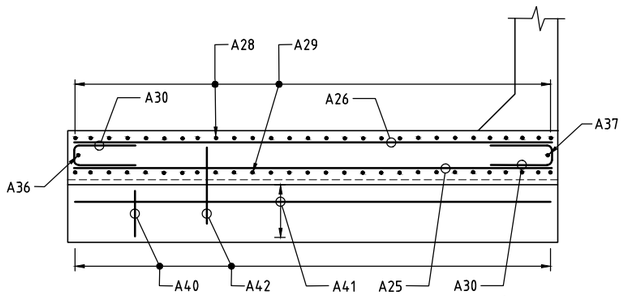

SECTION 9/-
SCALE 1:25

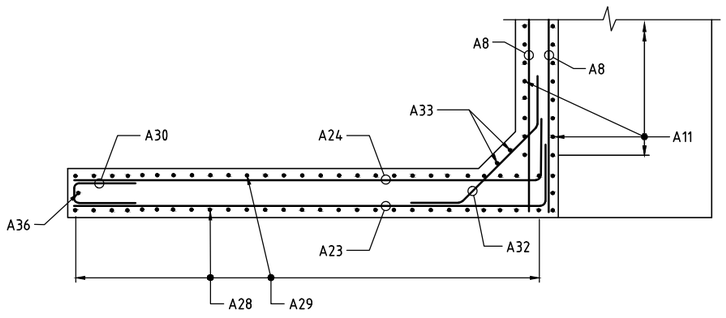

SECTION 8/-
SCALE 1:25

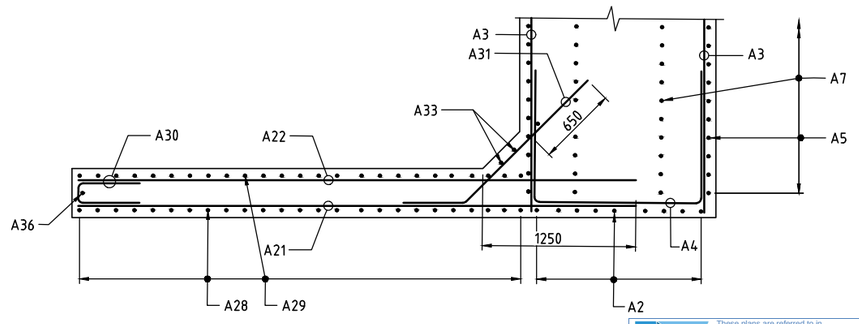

SECTION 7/-
SCALE 1:25

These plans are referred to in certificate no. **16746** approved by:
Eric Hausfeld
Registered Certifier
Registration No: BDC 2416
Categories: Certifier – Subdivision, Certifier – Strata, Certifier – Stormwater, Certifier – Road & Drainage, Certifier – Hydraulic (stormwater)
Land Development Certificates
www.LDC.com.au

GENERAL NOTES

FOR GENERAL NOTES RELATING TO THIS DRAWING, REFER DRG No 121.

DRAWING FILE LOCATION / NAME	PLOT DATE	TIME
V:_Vault\Projects\3001\30013046\110_CADD\CAD\DWG\30013046-122.dwg	14 Oct 2021	00:01:46

EXTERNAL REFERENCE FILES: X_30013046_SMEC_A1

REV	DATE	AMENDMENT / REVISION DESCRIPTION	WVR No.	APPROVAL
01	10.07.2021	ISSUED FOR TENDER	001	JD
02	20.08.2021	ISSUED FOR TENDER	001	JD
03	14.10.2021	ISSUED FOR TENDER	002	JD

TITLE	NAME
DRAFTER	T.SABAPATHI
DRAFTING CHECK	V.S.KODURU
DESIGNER	V.S.KODURU
DESIGN CHECK	V.BALAKRISHNAN
PROJECT MANAGER	J.DICKERSON
PROJECT DIRECTOR	K.LUU

SCALES AT A1 SIZE DRAWING: 0 500 1000mm; 250 125; 1:25

DESIGNER: SMEC
Member of the Surbana Jurong Group
© ABN 47 065 475 149
LEVEL 5, 20 BERRY STREET
NORTH SYDNEY NSW 2060
SMEC PROJECT No 30013046

CLIENT: FRASERS PROPERTY

PROJECT TITLE: SHRIMPTON CREEK BRIDGE

ABUTMENT REINFORCEMENT SHEET B

SCALE	PHASE	PROJECT / DRAWING No.	REVISION
AS NOTED	TENDER	30013046-122	03

150 mm ON ORIGINAL
A1

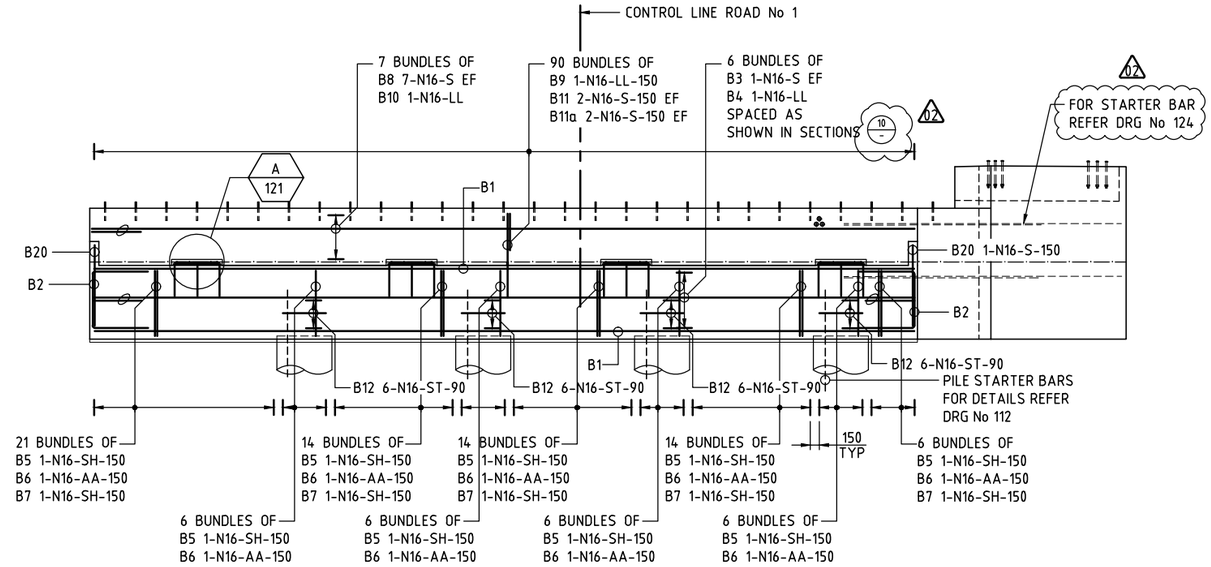

ELEVATION
SCALE 1:50

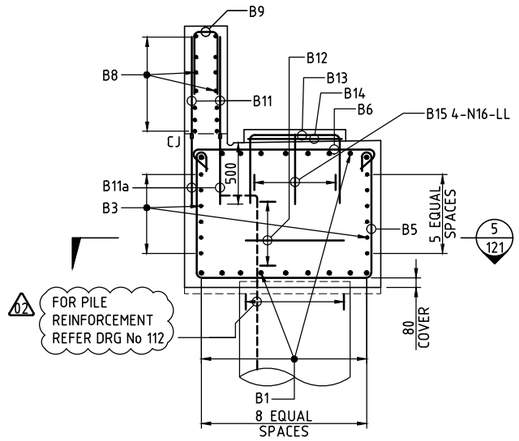

SECTION 10
SCALE 1:25

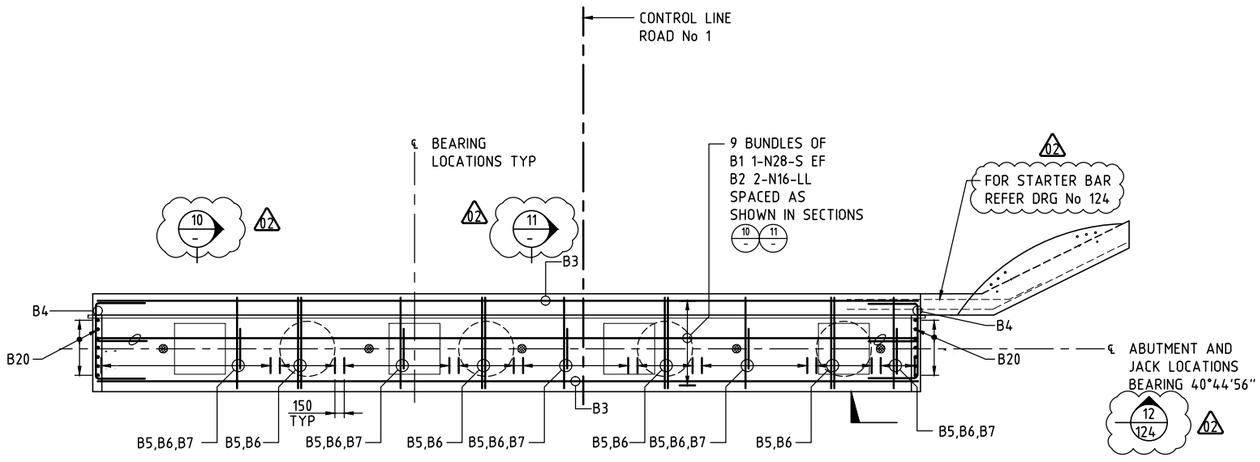

PLAN
SCALE 1:50

ABUTMENT B
PRE-INSTALLED ANCHOR BOLT NOT SHOWN FOR CLARITY

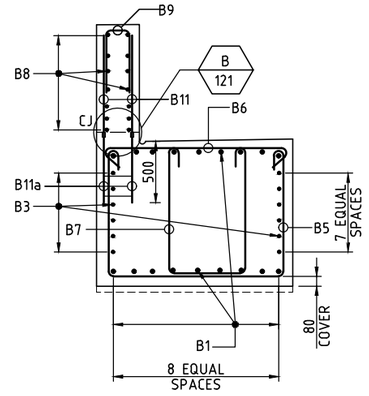

SECTION 11
SCALE 1:25

These plans are referred to in certificate no. **16746** approved by:
Eric Hausfeld
Registered Certifier
Registration No: BDC 2416
Categories: Certifier – Subdivision, Certifier – Strata, Certifier – Stormwater, Certifier – Road & Drainage, Certifier – Hydraulic (stormwater)
Land Development Certificates
www.LDC.com.au

GENERAL NOTES
FOR GENERAL NOTES RELATED TO THIS DRAWING, REFER DRG No 121.

DRAWING FILE LOCATION / NAME	PLOT DATE	TIME
V:_Vault\Projects\3001\30013046\110_CADD\CAD\DWG\30013046-123.dwg	13 Oct 2021	21:57:09

EXTERNAL REFERENCE FILES: X_30013046_SMEC_A1, X_BRG_PLAN

REV	DATE	AMENDMENT / REVISION DESCRIPTION	WVR No.	APPROVAL
01	20.08.2021	ISSUED FOR TENDER	001	JD
02	14.10.2021	ISSUED FOR TENDER	002	JD

TITLE	NAME
DRAFTER	T.SABAPATHI
DRAFTING CHECK	V.S.KODURU
DESIGNER	V.S.KODURU
DESIGN CHECK	V.BALAKRISHNAN
PROJECT MANAGER	J.DICKERSON
PROJECT DIRECTOR	K.LUU

SCALES AT A1 SIZE DRAWING: 0 1000 2000mm; 500 250; 1:50

DESIGNER: SMEC
Member of the Surbana Jurong Group
© ABN 47 065 475 149
LEVEL 5, 20 BERRY STREET
NORTH SYDNEY NSW 2060
SMEC PROJECT No 30013046

CLIENT: FRASERS PROPERTY

PROJECT TITLE: SHRIMPTON CREEK BRIDGE
ABUTMENT REINFORCEMENT
SHEET C

SCALE	PHASE	PROJECT / DRAWING No.	REVISION
AS NOTED	TENDER	30013046-123	02

150 mm ON ORIGINAL
A1

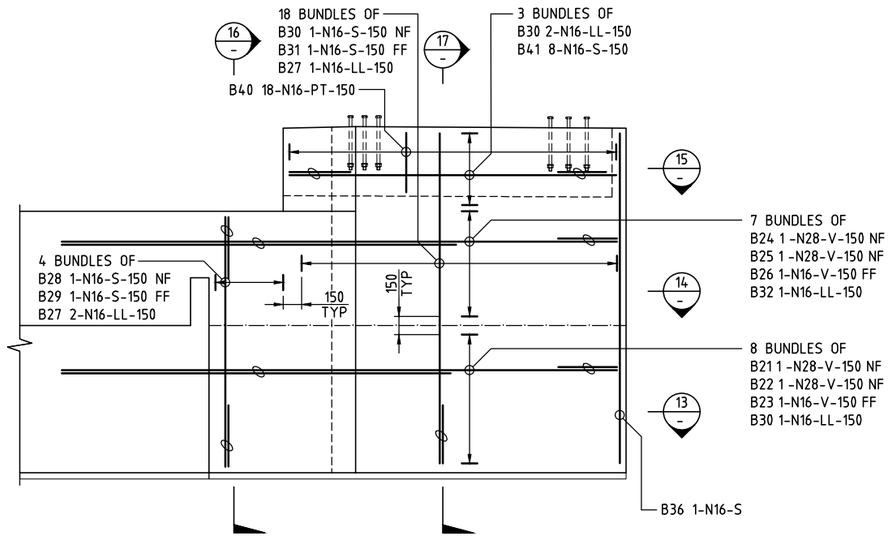

SECTION 12
SCALE 1:25
123

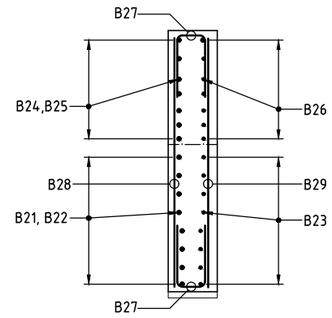

SECTION 16
SCALE 1:25
-

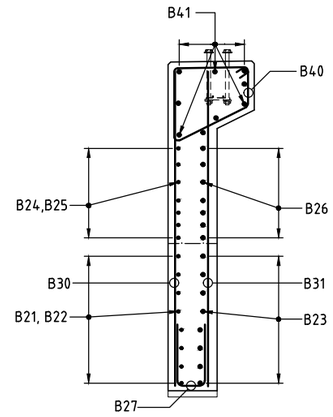

SECTION 17
SCALE 1:25
-

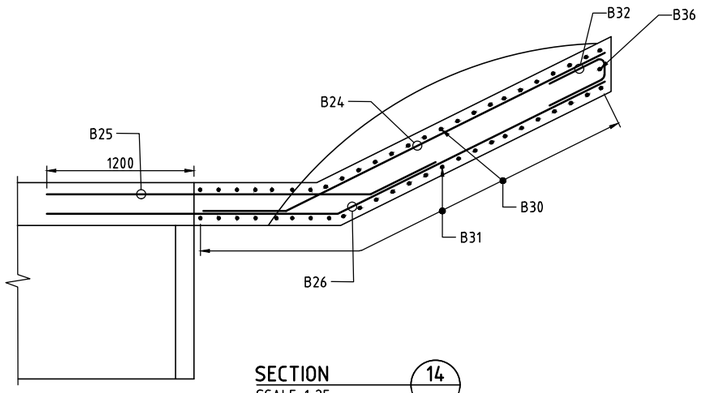

SECTION 14
SCALE 1:25
-

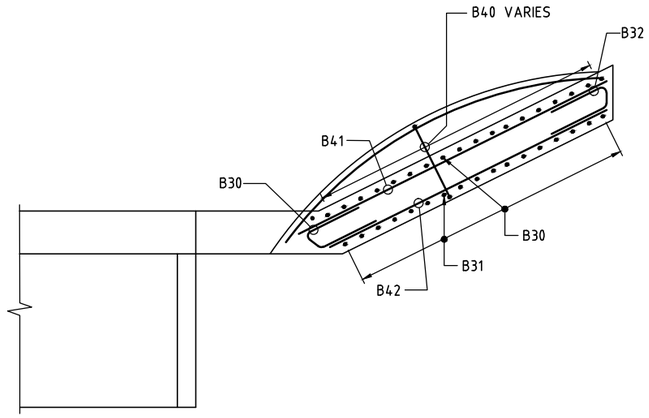

SECTION 15
SCALE 1:25
-

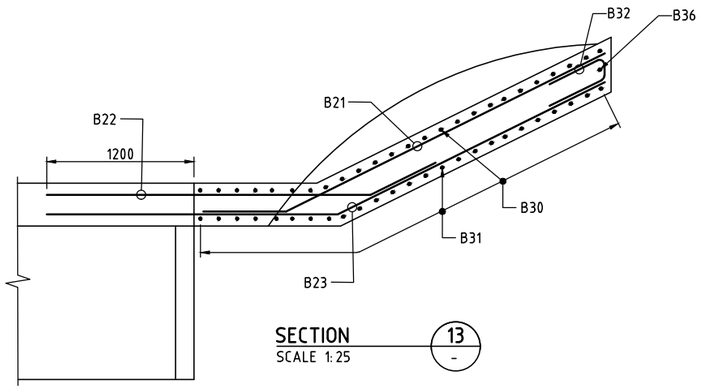

SECTION 13
SCALE 1:25
-

These plans are referred to in certificate no: **16746** approved by:
Eric Hausfeld
Registered Certifier
Registration No: BDC 2416
Categories: Certifier – Subdivision
Certifier – Strata
Certifier – Stormwater
Certifier – Road & Drainage
Certifier – Hydraulic (stormwater)
Land Development Certificates
www.LDC.com.au

GENERAL NOTES

FOR GENERAL NOTES RELATING TO THIS DRAWING, REFER DRG No 121.

DRAWING FILE LOCATION / NAME	PLOT DATE	TIME
V:_Vault\Projects\3001\30013046\110_CADD\CAD\DWG\30013046-124.dwg	14 Oct 2021	00:01:38

EXTERNAL REFERENCE FILES: X_30013046_SMEC_A1

REV	DATE	AMENDMENT / REVISION DESCRIPTION	WVR No.	APPROVAL
01	20.08.2021	ISSUED FOR TENDER	001	JD
02	14.10.2021	ISSUED FOR TENDER	002	JD

TITLE	NAME
DRAFTER	T.SABAPATHI
DRAFTING CHECK	V.S.KODURU
DESIGNER	V.S.KODURU
DESIGN CHECK	V.BALAKRISHNAN
PROJECT MANAGER	J.DICKERSON
PROJECT DIRECTOR	K.LUU

SCALES AT A1 SIZE DRAWING: 0 250 125 500 1000mm 1:25

DESIGNER: SMEC
Member of the Surbana Jurong Group
© ABN 47 065 475 149
LEVEL 5, 20 BERRY STREET
NORTH SYDNEY NSW 2060
SMEC PROJECT No 30013046

CLIENT: FRASERS PROPERTY

PROJECT TITLE: SHRIMPTON CREEK BRIDGE

ABUTMENT REINFORCEMENT SHEET D

SCALE	PHASE	PROJECT / DRAWING No.	REVISION
AS NOTED	TENDER	30013046-124	02

150 mm ON ORIGINAL
A1

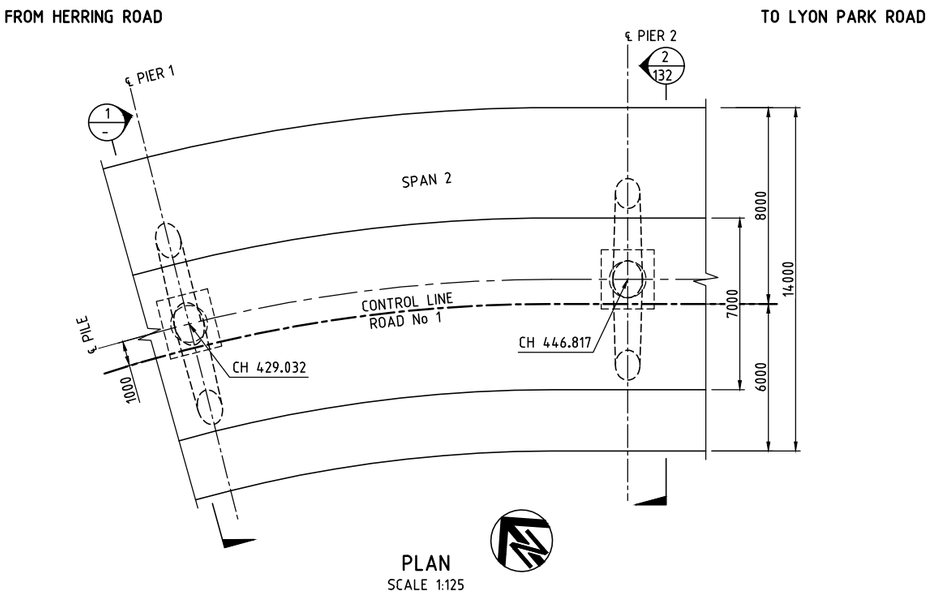

PLAN
SCALE 1:125

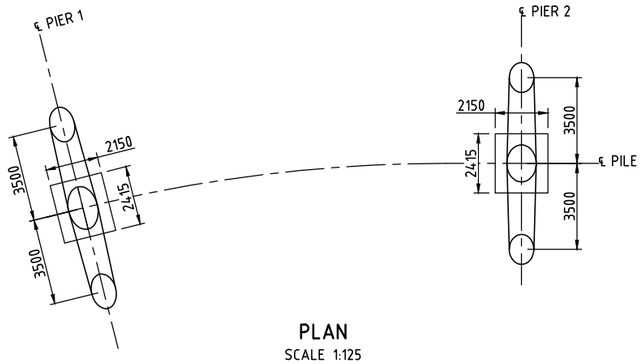

PLAN
SCALE 1:125
PIER LAYOUT

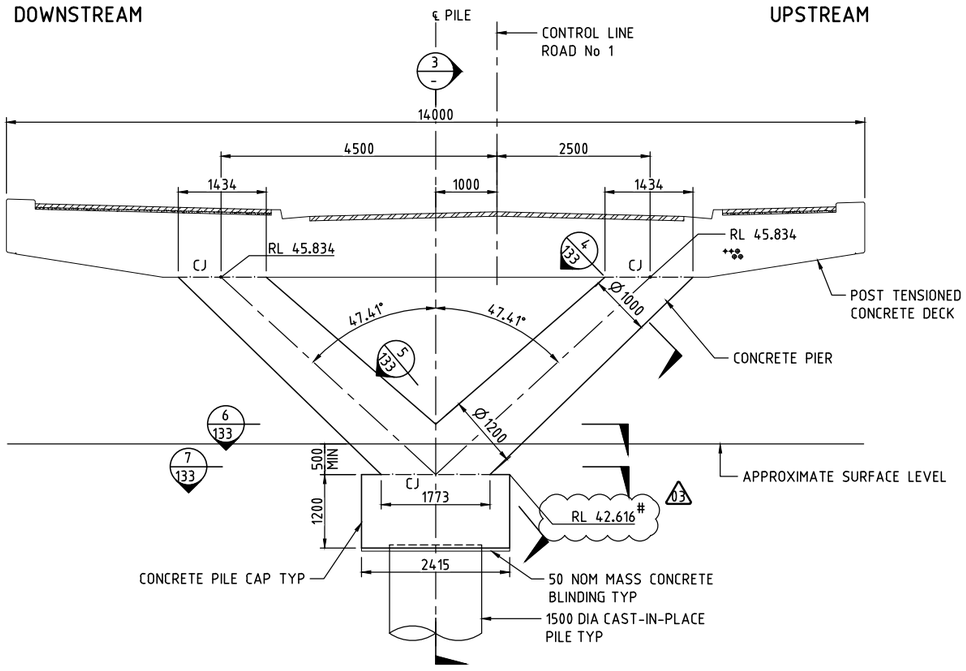

SECTION 1 -
SCALE 1:50

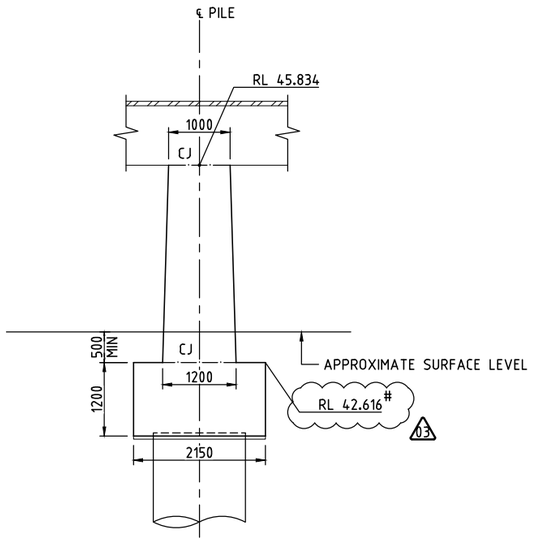

SECTION 3 -
SCALE 1:50

GENERAL NOTES

ALL DIMENSIONS ARE IN MILLIMETRES UNLESS NOTED OTHERWISE.
CONCRETE EXPOSURE CLASSIFICATION: B1.
MINIMUM 28 DAYS COMPRESSIVE STRENGTH OF CONCRETE SHALL BE 40 MPa.
MINIMUM 28 DAYS COMPRESSIVE STRENGTH OF MASS CONCRETE SHALL BE 20 MPa.
CONSTRUCTION JOINT ONLY AT THE LOCATIONS NOMINATED ON THE DRAWINGS.
EXPOSED CONCRETE SURFACE TO HAVE SMOOTH FINISH.
03 # DENOTES PROVIDED RL NEED TO BE CONFIRMED ON SITE.

DURABILITY NOTES

MAXIMUM TOTAL BINDER CONTENT SHALL BE KEPT AT 430kg/m^3 WITH TYPE GB CEMENT WITH 65.5% GROUND GRANULAR BLAST-FURNACE SLAG.
USE 36mm THICK PLYWOOD FORMWORK OR PROVIDE INSULATION TO FORMWORK CONSTRUCTED WITH OTHER MATERIALS TO ACHIEVE AN OVERALL SURFACE CONDUCTANCE LESS THAN 3.0W/m^2 °C.
MAXIMUM CONCRETE PLACEMENT TEMPERATURE SHALL NOT EXCEED 27°C.
TOP SURFACE OF THE PIER SHALL BE COVERED WITH 20mm THICK POLYSTYRENE FOAM OR EQUIVALENT AFTER CASTING. THE INSULATION SHALL BE REMOVED AT THE SAME TIME AS THE FORMWORK.
FORMWORK SHALL BE REMOVED NOT EARLIER THAN 216 HOURS.
THERMOCOUPLES SHOULD BE LOCATED WITHIN THE CONCRETE MEMBER BEING CONSTRUCTED. (ONE AT CENTRE AND ONE BELOW SURFACE WITH THE LAST DIMENSION).

LDC
These plans are referred to in certificate no. **16746** approved by:
Eric Hausfeld
Registered Certifier
Registration No: BDC 2416
Categories: Certifier – Subdivision
Certifier – Strata
Certifier – Stormwater
Certifier – Road & Drainage
Certifier – Hydraulic (stormwater)
Land Development Certificates
www.LDC.com.au

DRAWING FILE LOCATION / NAME: V:_Vault\Projects\3001\30013046\110_CADD\CAD\DWG\30013046-131.dwg
PLOT DATE: 13 Oct 2021 TIME: 21:56:47

EXTERNAL REFERENCE FILES: X_30013046_SMEC_A1, X_BRG_PLAN, X_CES_MAIN, X_BRG_SEC

REV	DATE	AMENDMENT / REVISION DESCRIPTION	WVR No.	APPROVAL
01	10.07.2021	ISSUED FOR TENDER	001	JD
02	20.08.2021	ISSUED FOR TENDER	001	JD
03	14.10.2021	ISSUED FOR TENDER	002	JD

TITLE	NAME
DRAFTER	T.SABAPATHI
DRAFTING CHECK	V.S.KODURU
DESIGNER	V.S.KODURU
DESIGN CHECK	V.BALAKRISHNAN
PROJECT MANAGER	J.DICKERSON
PROJECT DIRECTOR	K.LUU

SCALES AT A1 SIZE DRAWING: 0 2500 5000mm; 1250 625; 1:125

DESIGNER: SMEC
Member of the Surbana Jurong Group
© ABN 47 065 475 149
LEVEL 5, 20 BERRY STREET
NORTH SYDNEY NSW 2060
SMEC PROJECT No 30013046

CLIENT: FRASERS PROPERTY

PROJECT TITLE: SHRIMPTON CREEK BRIDGE

PIER DETAILS SHEET A

SCALE	PHASE	PROJECT / DRAWING No.	REVISION
AS NOTED	TENDER	30013046-131	03

A1 150 mm ON ORIGINAL

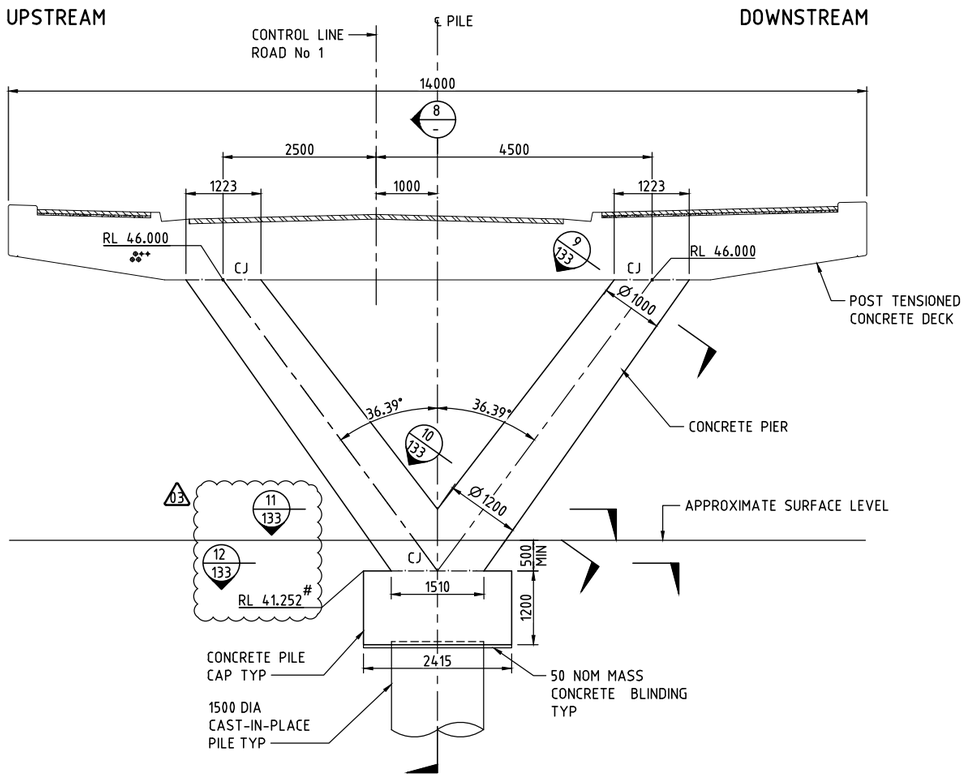

SECTION 2/131
SCALE 1:50

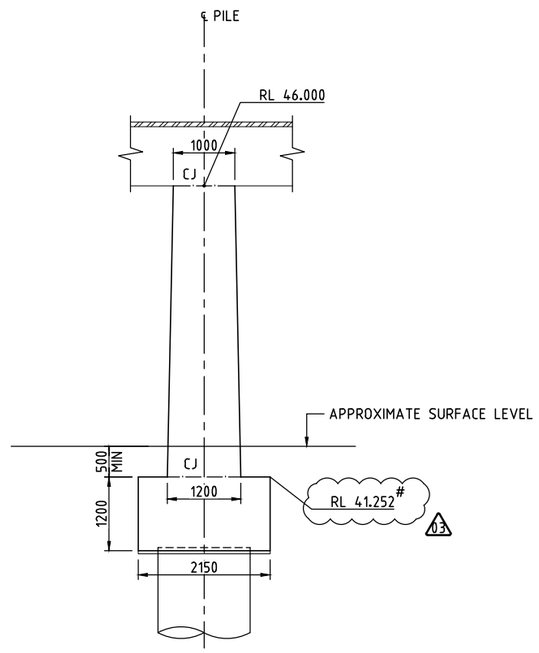

SECTION 8/-
SCALE 1:50

LDC
These plans are referred to in certificate no. **16746** approved by:
Eric Hausfeld
Registered Certifier
Registration No: BDC 2416
Categories: Certifier – Subdivision
Certifier – Strata
Certifier – Stormwater
Certifier – Road & Drainage
Certifier – Hydraulic (stormwater)
Land Development Certificates
www.LDC.com.au

GENERAL NOTES

FOR GENERAL NOTES RELATING TO THIS DRAWING, REFER DRG No 131.

150 mm ON ORIGINAL

A1

DRAWING FILE LOCATION / NAME: V:_Vault\Projects\3001\30013046\110_CADD\CAD\DWG\30013046-132.dwg

PLOT DATE: 13 Oct 2021 TIME: 21:56:33

EXTERNAL REFERENCE FILES: X_30013046_SMEC_A1, X_BRG_SEC

REV	DATE	AMENDMENT / REVISION DESCRIPTION	WVR No.	APPROVAL
01	10.07.2021	ISSUED FOR TENDER	001	JD
02	20.08.2021	ISSUED FOR TENDER	001	JD
03	14.10.2021	ISSUED FOR TENDER	002	JD

TITLE	NAME
DRAFTER	T.SABAPATHI
DRAFTING CHECK	V.S.KODURU
DESIGNER	V.S.KODURU
DESIGN CHECK	V.BALAKRISHNAN
PROJECT MANAGER	J.DICKERSON
PROJECT DIRECTOR	K.LUU

SCALES AT A1 SIZE DRAWING: 0 1000 2000mm; 500 250 1:50

DESIGNER: SMEC
Member of the Surbana Jurong Group
© ABN 47 065 475 149
LEVEL 5, 20 BERRY STREET
NORTH SYDNEY NSW 2060
SMEC PROJECT No 30013046

CLIENT: FRASERS PROPERTY

PROJECT TITLE: SHRIMPTON CREEK BRIDGE

PIER DETAILS
SHEET B

SCALE	PHASE	PROJECT / DRAWING No.	REVISION
AS NOTED	TENDER	30013046-132	03

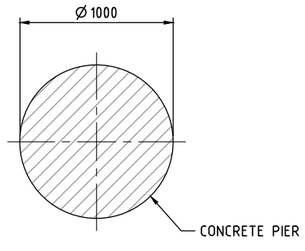

SECTION 4/131 9/132
SCALE 1:20

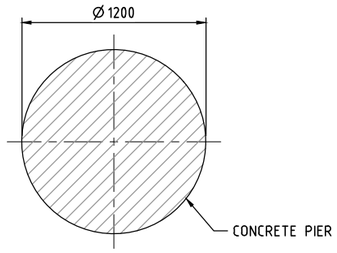

SECTION 5/131 10/132
SCALE 1:20

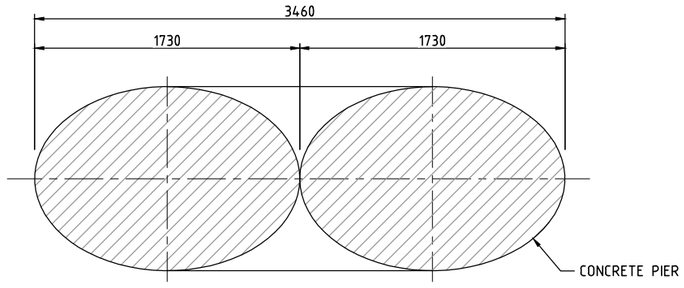

SECTION 6/131
SCALE 1:20

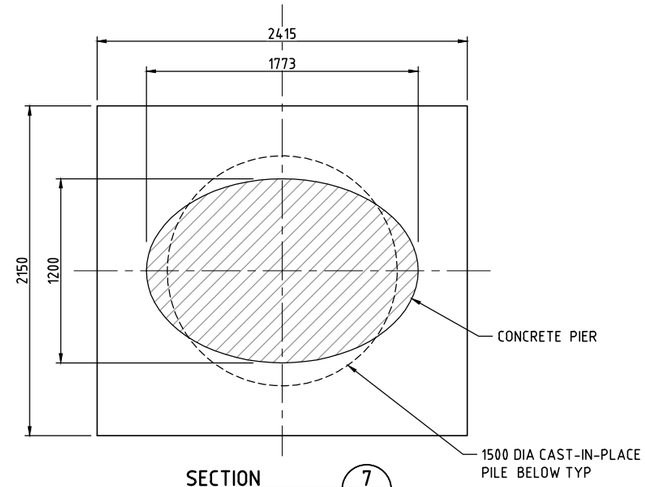

SECTION 7/131
SCALE 1:20

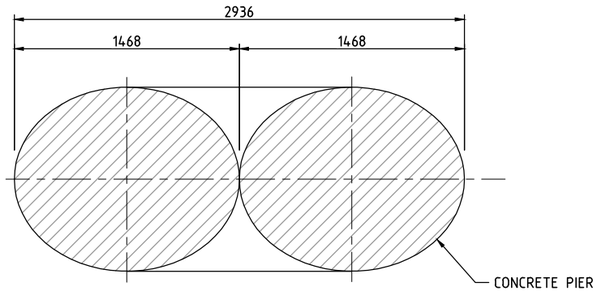

SECTION 11/132
SCALE 1:20

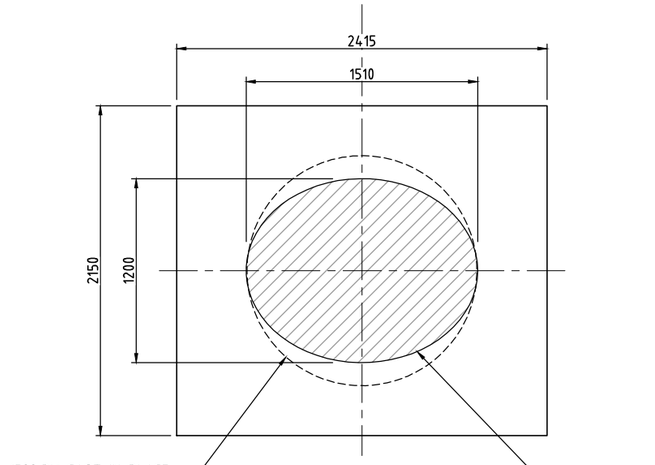

SECTION 12/132
SCALE 1:20

150 mm ON ORIGINAL

A1

These plans are referred to in certificate no. **16746** approved by:
Eric Hausfeld
Registered Certifier
Registration No: BDC 2416
Categories: Certifier – Subdivision; Certifier – Strata; Certifier – Stormwater; Certifier – Road & Drainage; Certifier – Hydraulic (stormwater)
Land Development Certificates
www.LDC.com.au

GENERAL NOTES

FOR GENERAL NOTES RELATING TO THIS DRAWING, REFER DRG No 131.

DRAWING FILE LOCATION / NAME: V:_Vault\Projects\3001\30013046\110_CADD\CAD\DWG\30013046-133.dwg

PLOT DATE: 14 Oct 2021 TIME: 00:01:25

EXTERNAL REFERENCE FILES: X_30013046_SMEC_A1

REV	DATE	AMENDMENT / REVISION DESCRIPTION	WVR No.	APPROVAL
01	10.07.2021	ISSUED FOR TENDER	001	JD
02	20.08.2021	ISSUED FOR TENDER	001	JD

TITLE	NAME
DRAFTER	T.SABAPATHI
DRAFTING CHECK	V.S.KODURU
DESIGNER	V.S.KODURU
DESIGN CHECK	V.BALAKRISHNAN
PROJECT MANAGER	J.DICKERSON
PROJECT DIRECTOR	K.LUU

SCALES AT A1 SIZE DRAWING: 0 200 400 600 800 1000mm; 200 100; 1:20

DESIGNER: SMEC
Member of the Surbana Jurong Group
© ABN 47 065 475 149
LEVEL 5, 20 BERRY STREET
NORTH SYDNEY NSW 2060
SMEC PROJECT No 30013046

CLIENT: FRASERS PROPERTY

PROJECT TITLE: SHRIMPTON CREEK BRIDGE

PIER DETAILS
SHEET C

SCALE	PHASE	PROJECT / DRAWING No.	REVISION
AS NOTED	TENDER	30013046-133	02

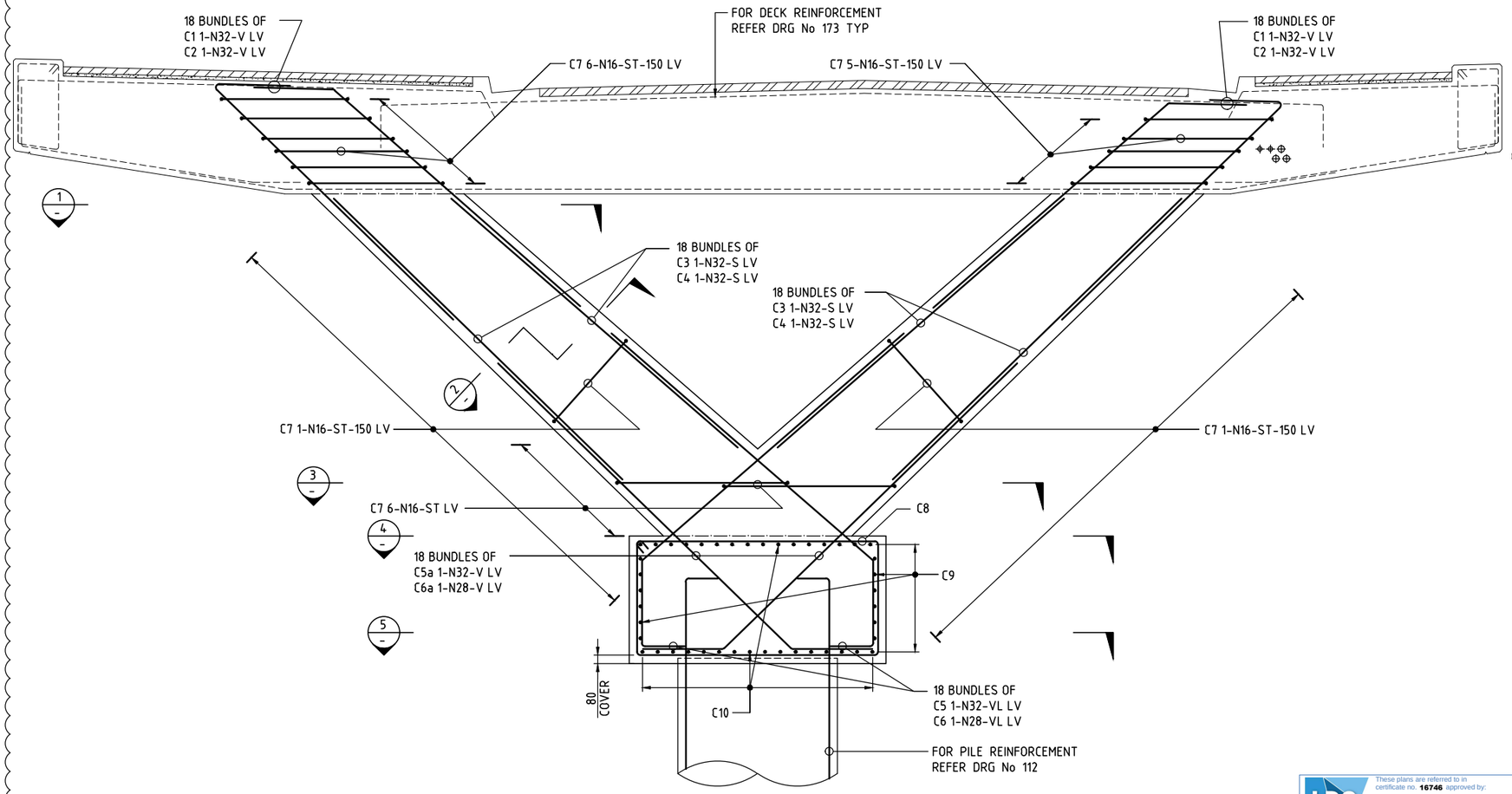

ELEVATION
SCALE 1:25
PIER 1

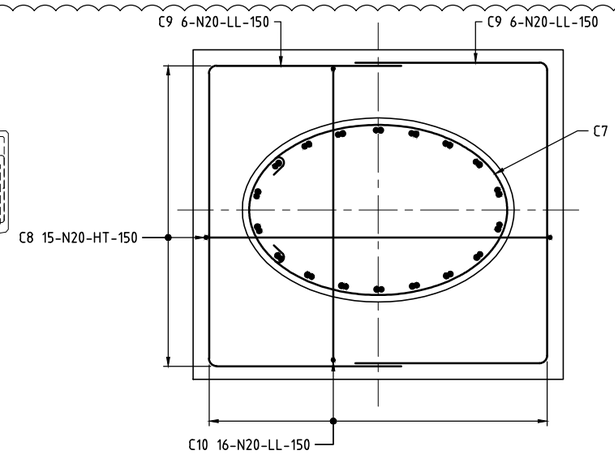

SECTION 4
SCALE 1:20

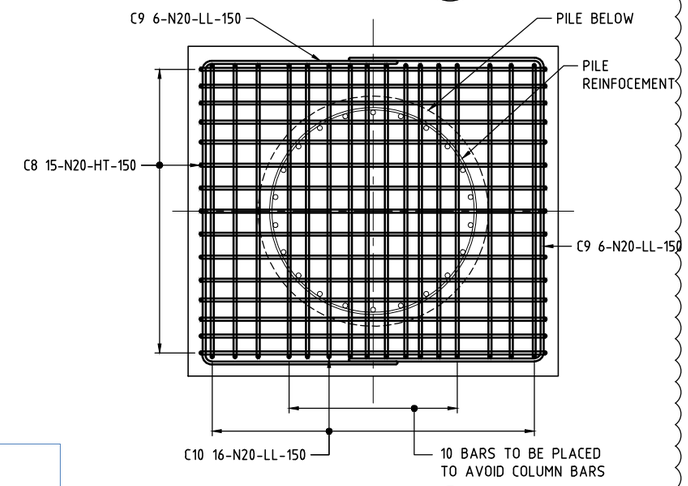

SECTION 5
SCALE 1:20

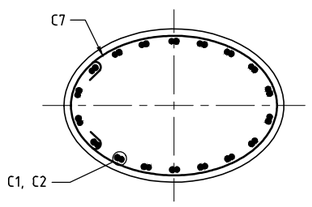

SECTION 1
SCALE 1:20

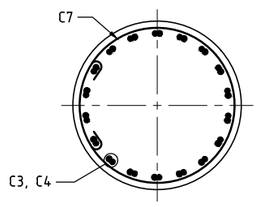

SECTION 2
SCALE 1:20

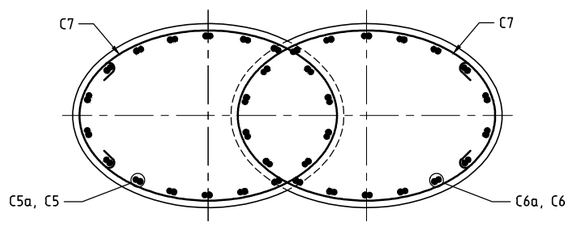

SECTION 3
SCALE 1:20

These plans are referred to in certificate no. **16746** approved by:
Eric Hausfeld
Registered Certifier
Registration No: BDC 2416
Categories: Certifier – Subdivision, Certifier – Strata, Certifier – Stormwater, Certifier – Road & Drainage, Certifier – Hydraulic (stormwater)
Land Development Certificates
www.LDC.com.au

03

GENERAL NOTES

ALL DIMENSIONS ARE IN MILLIMETRES UNLESS NOTED OTHERWISE.
REINFORCEMENT GRADE SHALL BE D500N TO AS/NZS UNLESS NOTED OTHERWISE.
NOMINAL COVER TO REINFORCEMENT NEAREST TO THE CONCRETE SURFACE SHALL BE 45mm UNLESS NOTED OTHERWISE.
UNLESS NOTED OTHERWISE THE MINIMUM LAP LENGTHS OF BARS SHALL BE AS FOLLOWS:

BAR SIZE:	N12	N16	N20	N24	N28	N32	N36
a) HORIZONTAL BARS WITH >300mm OF CONCRETE CAST BELOW THE BAR	650	900	1150	1430	1730	2060	2410
b) OTHER BARS	500	690	890	1100	1330	1590	1860

ON CURVE REGION TRANSVERSE BARS TO BE PLACED RADIALLY AND THE BAR SPACING TO BE MAINTAINED ON THE OUTER CURVE
CLEAR DISTANCE BETWEEN LAPPED BARS SHALL NOT EXCEED 3 x THE BAR DIAMETER.
REINFORCEMENT MAY BE DISPLACED SLIGHTLY WHERE NECESSARY TO CLEAR DOWELS, ANCHORS, DUCTS, DRAINAGE LINES AND GENERAL FITMENTS.
CURING OF THE CONCRETE SHALL NOT INCLUDE CURING COMPOUNDS AND SHALL COMMENCE IMMEDIATELY AFTER FINISHING OPERATIONS HAVE BEEN COMPLETED ON THE CONCRETE BEING PLACED.
FOR BAR SHAPES DIAGRAM REFER DRG No 216.

DRAWING FILE LOCATION / NAME: V:_Vault\Projects\3001\30013046\110_CADD\CAD\DWG\30013046-135.dwg
PLOT DATE: 13 Oct 2021 TIME: 21:56:56

EXTERNAL REFERENCE FILES: X_30013046_SMEC_A1, X_BRG_SEC

REV	DATE	AMENDMENT / REVISION DESCRIPTION	WVR No.	APPROVAL
01	10.07.2021	ISSUED FOR TENDER	001	JD
02	20.08.2021	ISSUED FOR TENDER	001	JD
03	14.10.2021	ISSUED FOR TENDER	002	JD

TITLE	NAME
DRAFTER	T.SABAPATHI
DRAFTING CHECK	V.S.KODURU
DESIGNER	V.S.KODURU
DESIGN CHECK	V.BALAKRISHNAN
PROJECT MANAGER	J.DICKERSON
PROJECT DIRECTOR	K.LUU

SCALES AT A1 SIZE DRAWING: 0 500 1000mm; 250 125; 1:25

DESIGNER: SMEC
Member of the Surbana Jurong Group
© ABN 47 065 475 149
LEVEL 5, 20 BERRY STREET
NORTH SYDNEY NSW 2060
SMEC PROJECT No 30013046

CLIENT: FRASERS PROPERTY

PROJECT TITLE: SHRIMPTON CREEK BRIDGE

PIER REINFORCEMENT DETAILS SHEET A

SCALE	PHASE	PROJECT / DRAWING No.	REVISION
AS NOTED	TENDER	30013046-135	03

150 mm ON ORIGINAL
A1

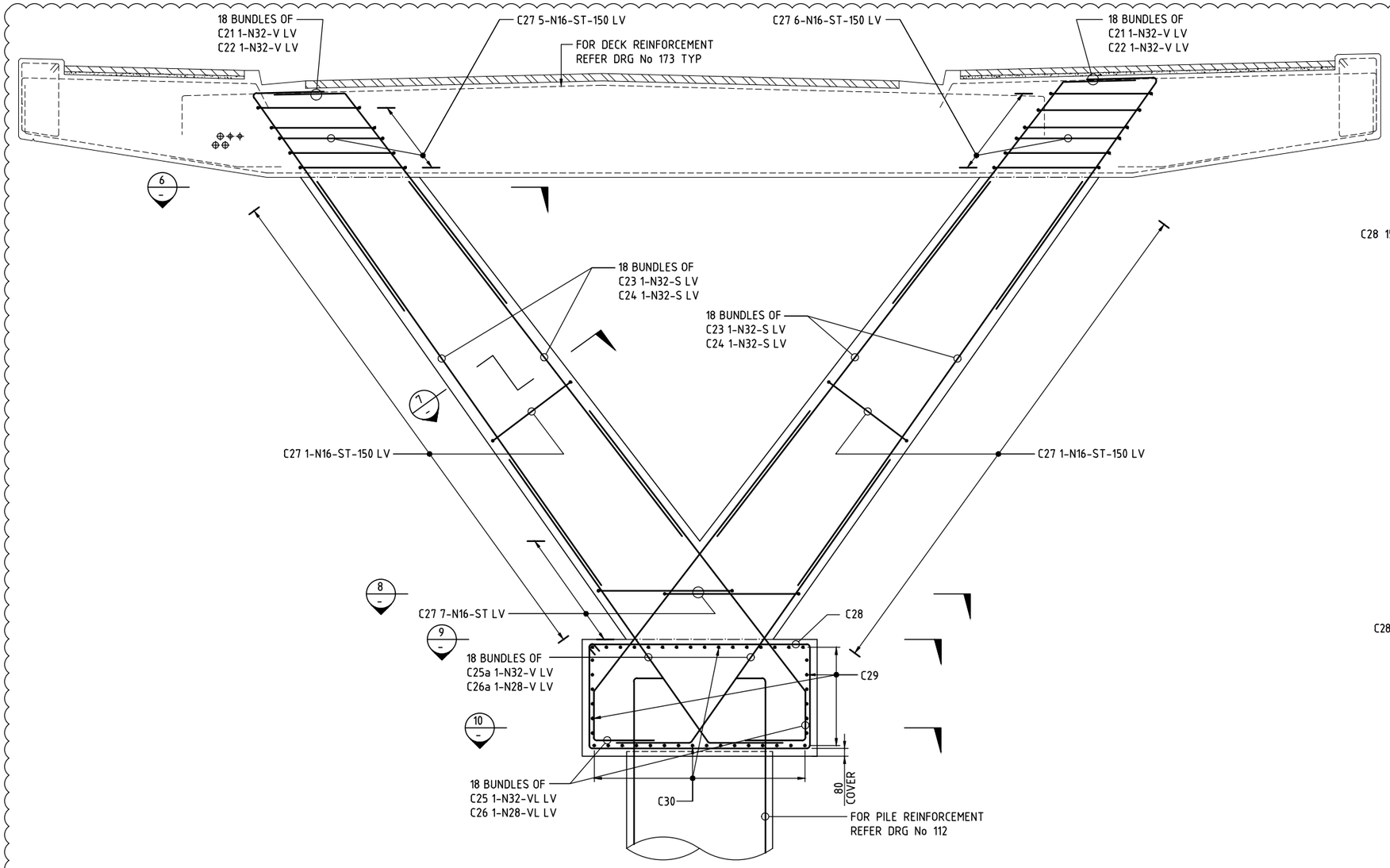

ELEVATION
SCALE 1:25
PIER 2

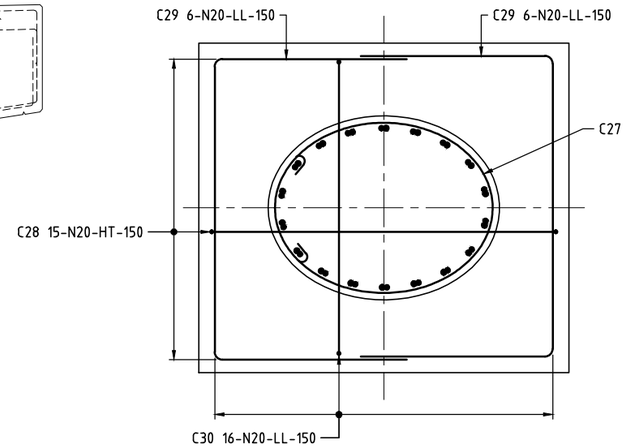

SECTION 9
SCALE 1:20

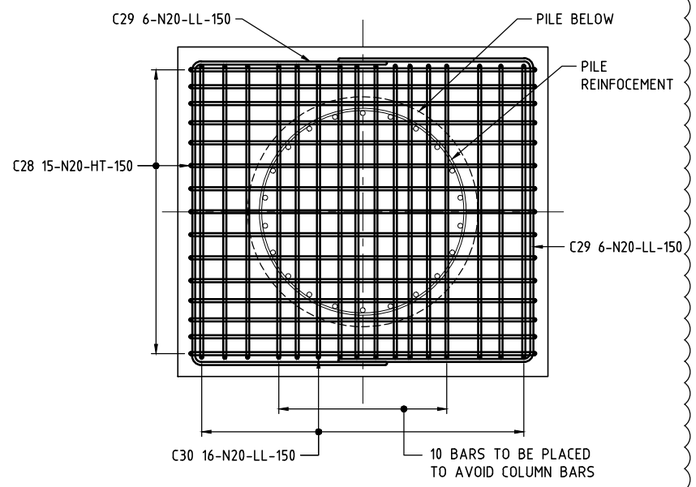

SECTION 10
SCALE 1:20

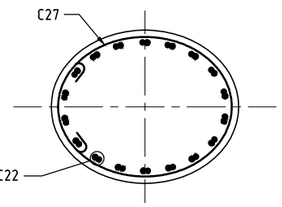

SECTION 6
SCALE 1:20

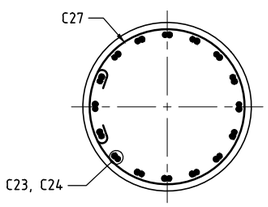

SECTION 7
SCALE 1:20

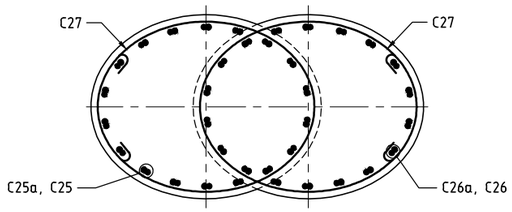

SECTION 8
SCALE 1:20

03

These plans are referred to in certificate no. **16746** approved by:
Eric Hausfeld
Registered Certifier
Registration No: BDC 2416
Categories: Certifier – Subdivision, Certifier – Strata, Certifier – Stormwater, Certifier – Road & Drainage, Certifier – Hydraulic (stormwater)
Land Development Certificates
www.LDC.com.au

GENERAL NOTES

FOR OTHER GENERAL NOTES RELATED TO THIS DRAWING, REFER TO DRG No 135.

DRAWING FILE LOCATION / NAME: V:_Vault\Projects\3001\30013046\110_CADD\CAD\DWG\30013046-136.dwg
PLOT DATE: 13 Oct 2021 TIME: 21:56:23

EXTERNAL REFERENCE FILES: X_30013046_SMEC_A1, X_BRG_SEC

REV	DATE	AMENDMENT / REVISION DESCRIPTION	WVR No.	APPROVAL
01	10.07.2021	ISSUED FOR TENDER	001	JD
02	20.08.2021	ISSUED FOR TENDER	001	JD
03	14.10.2021	ISSUED FOR TENDER	002	JD

TITLE	NAME
DRAFTER	T.SABAPATHI
DRAFTING CHECK	V.S.KODURU
DESIGNER	V.S.KODURU
DESIGN CHECK	V.BALAKRISHNAN
PROJECT MANAGER	J.DICKERSON
PROJECT DIRECTOR	K.LUU

SCALES AT A1 SIZE DRAWING: 0 500 1000mm; 250 125; 1:25

DESIGNER: SMEC
Member of the Surbana Jurong Group
© ABN 47 065 475 149
LEVEL 5, 20 BERRY STREET
NORTH SYDNEY NSW 2060
SMEC PROJECT No 30013046

CLIENT: FRASERS PROPERTY

PROJECT TITLE: SHRIMPTON CREEK BRIDGE

PIER REINFORCEMENT DETAILS SHEET B

SCALE	PHASE	PROJECT / DRAWING No.	REVISION
AS NOTED	TENDER	30013046-136	03

150 mm ON ORIGINAL
A1

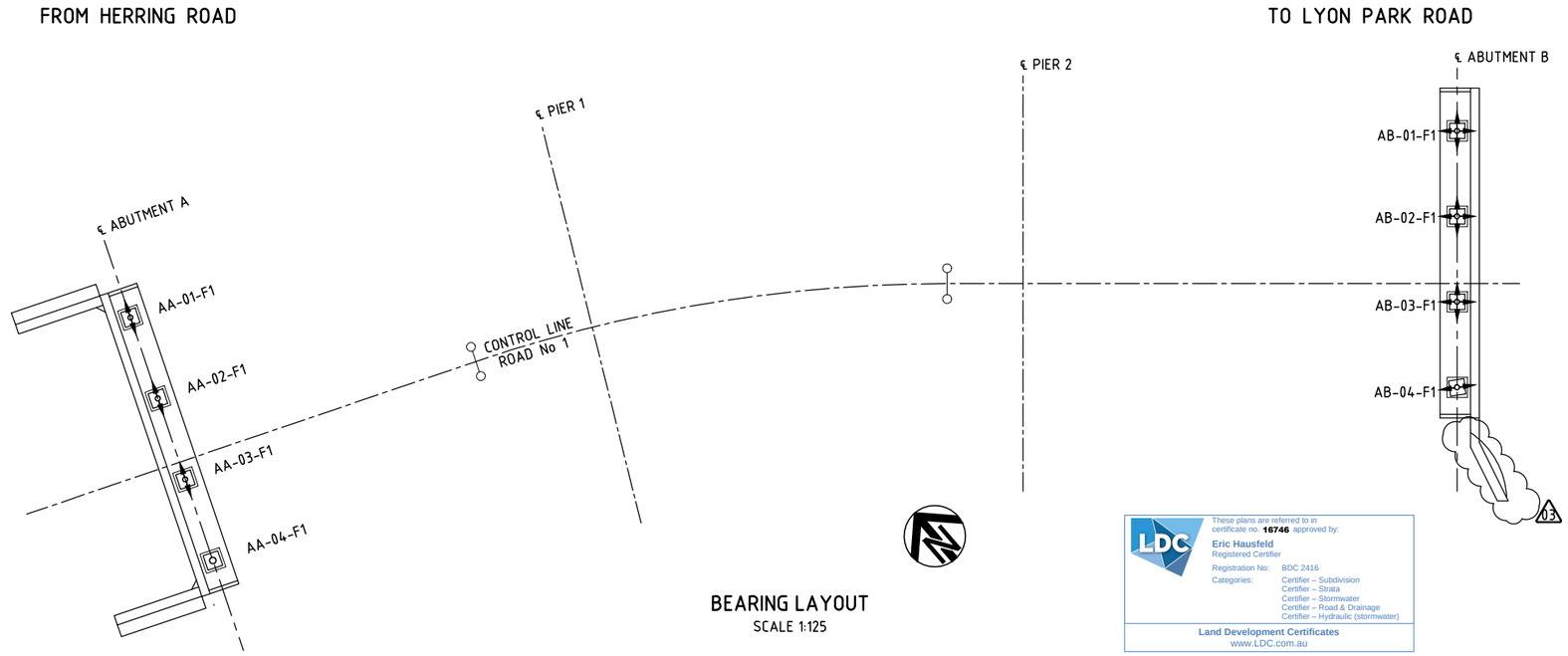

BEARING LAYOUT
SCALE 1:125

These plans are referred to in certificate no. **16746** approved by:
Eric Hausfeld
Registered Certifier
Registration No: BDC 2416
Categories: Certifier – Subdivision; Certifier – Strata; Certifier – Stormwater; Certifier – Road & Drainage; Certifier – Hydraulic (stormwater)
Land Development Certificates
www.LDC.com.au

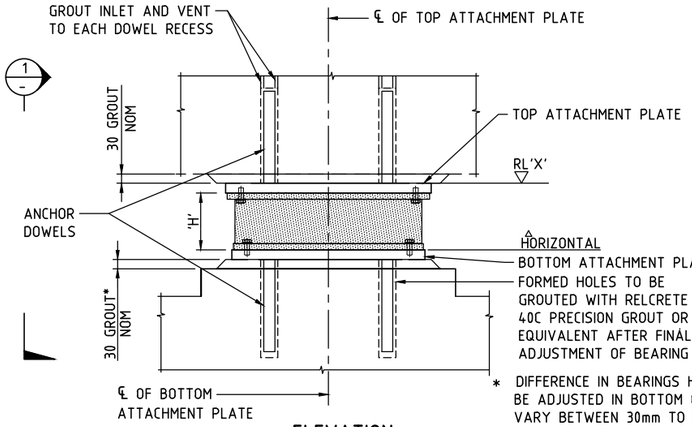

* DIFFERENCE IN BEARINGS HEIGHT NEED TO BE ADJUSTED IN BOTTOM GROUT WHICH MAY VARY BETWEEN 30mm TO 80mm. BEYOND THAT PEDESTAL HEIGHT CAN BE INCREASED ACCORDINGLY.

ELEVATION
SCALE 1:10

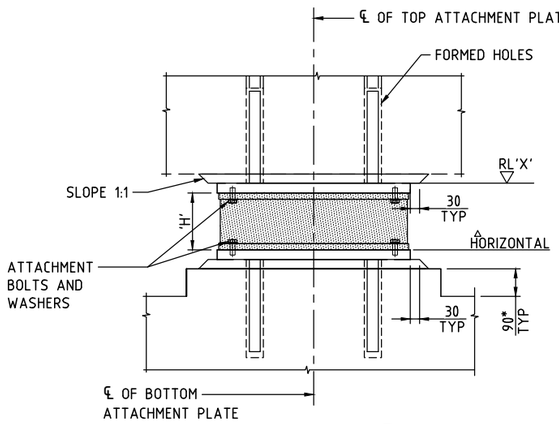

VIEW 1
SCALE 1:10

\# POSITION OF TAPPED HOLES FOR ATTACHMENT OF PLATE TO BEARING TO BE DETERMINED BY THE BEARING MANUFACTURER

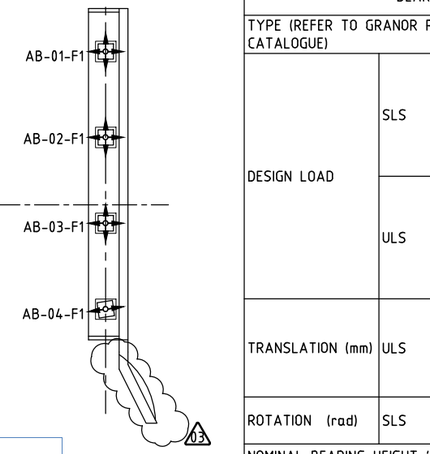

PLAN
SCALE 1:10
TOP ATTACHMENT PLATE

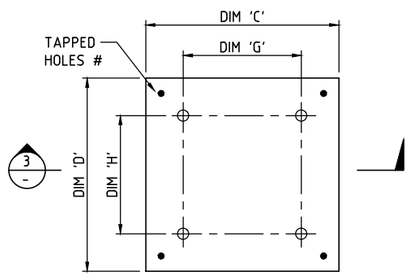

PLAN
SCALE 1:10
BOTTOM ATTACHMENT PLATE

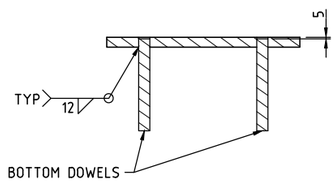

SECTION 3
SCALE 1:10

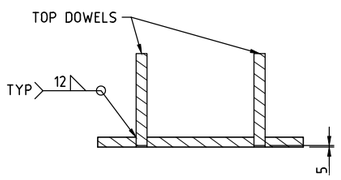

SECTION 2
SCALE 1:10

LEGEND
- FREE SLIDING POT BEARING - FREE TO MOVE IN ALL DIRECTIONS
- GUIDED SLIDING POT BEARING - FREE TO MOVE LONGITUDINALLY
- GUIDED SLIDING POT BEARING - FREE TO MOVE TRANSVERSELY
- FIXED POT BEARING

TABLE 1 - BEARING SCHEDULE

BEARING LOCATION AND REFERENCE				AA-01/02/03	AA-04	AB-01/02/03	AB-04
BEARING TYPE				TRANSVERSLY GUIDED	FIXED	FREE	LONGITUDINALLY GUIDED
TYPE (REFER TO GRANOR POT-TYPE BEARING CATALOGUE)				GPGS6000	GPGS5000	GPFF1500	GPGS6000
DESIGN LOAD	SLS	VERTICAL	MAX	1494	1029	1389	1048
			PERMANENT	708	600	850	619
			MIN	446	419	374	444
		HORIZONTAL	LONGITUDINAL	603	510	-	-
			TRANSVERSE	-	515	-	543
	ULS	VERTICAL	MAX	2248	1480	2108	1497
			PERMANENT	835	713	1011	730
			MIN	488	430	424	473
		HORIZONTAL	LONGITUDINAL	818	664	-	-
			TRANSVERSE	-	803	-	786
TRANSLATION (mm)	ULS	PRESET P	LONGITUDINAL	-	-	-	-
			TRANSVERSE	-	-	-	-
		MOVEMENT	LONGITUDINAL	0	0	±50	±50
			TRANSVERSE	±15	0	±15	0
ROTATION (rad)	SLS		LONGITUDINAL	0.01	0.01	0.01	0.01
			TRANSVERSE				
NOMINAL BEARING HEIGHT 'H' (mm)				185	142	98	185
TOP ATTACHMENT PLATE		THICKNESS (mm)		32	32	20	32
		DIM 'A' (mm)		670	740	390	670
		DIM 'B' (mm)		630	575	320	630
DOWELS		DIM 'E' (mm)		385	620	230	385
		DIM 'F' (mm)		385	455	230	385
		DOWEL SIZE (mm)		36	36	20	36
		DOWEL LENGTH (mm)		300	250	200	300
BOTTOM ATTACHMENT PLATE		THICKNESS (mm)		32	32	20	32
		DIM 'C' (mm)		630	575	320	630
		DIM 'D' (mm)		630	575	320	630
DOWELS		DIM 'G' (mm)		385	325	180	385
		DIM 'H' (mm)		385	325	180	385
		DOWEL SIZE (mm)		36	36	20	36
		DOWEL LENGTH (mm)		300	250	200	300
RL 'X'		AT ABUTMENT A		45.638	45.638	-	-
		AT ABUTMENT B		-	-	46.137	46.137

GENERAL NOTES
MINIMUM 28 DAYS COMPRESSIVE STRENGTH OF MORTAR AND GROUT SHALL BE 50MPa.
MORTAR SHALL BE DRY PACKED.
EXPOSED CONCRETE SURFACE TO HAVE SMOOTH FINISH.

CONSTRUCTION SEQUENCE
DOWELS IN ATTACHMENT PLATES OF BEARINGS SHALL BE GROUTED BEFORE ALL TENDONS ARE STRESSED AND GROUTED.
CONTRACTOR SHALL PROVIDE TEMPORARY SUPPORTS AND RESTRAINTS BEFORE THE BEARINGS ARE GROUTED.

BEARING NOTES
TYPICAL POT-TYPE BEARING AND ASSOCIATED ATTACHMENT PLATES ARE DETAILED ON THE BEARING DRAWINGS.
POT-TYPE BEARINGS OF ANY MANUFACTURER WILL BE CONSIDERED PROVIDED:
a) THE PERFORMANCE REQUIREMENTS IN TABLE 1 ARE SATISFIED.
b) ANY VARIATIONS OF THE PHYSICAL DIMENSIONS OF THE BEARINGS AND ATTACHMENT PLATES FROM THOSE SHOWN ON THE DRAWINGS CAN BE ACCOMMODATED WITHIN THE STRUCTURE.

THE ACTUAL HEIGHT OF THE BEARINGS SHALL BE ASCERTAINED FROM THE BEARING MANUFACTURER BEFORE CONSTRUCTION OF THE ABUTMENTS.
THE REDUCED LEVEL AT THE TOP OF THE ABUTMENTS SHALL BE ADJUSTED TO SUIT THE ACTUAL BEARING HEIGHTS WHERE REQUIRED.
ALL SURFACES (EXCEPT STAINLESS STEEL SLIDING SURFACES) OF THE BEARINGS SHALL BE GIVEN A PROTECTIVE TREATMENT OF AN INORGANIC ZINC SILICATE PRIMER AND TWO COATS OF CHLORINATED RUBBER FINISHING PAINT.
BEARING ASSEMBLIES SHALL BE HELD TOGETHER WITH TRANSIT BOLTS TO PREVENT MISALIGNMENT AND DAMAGE TO THE COMPONENT DURING TRANSIT AND ERECTION. THE TRANSIT BOLTS SHOULD BE REMOVED UNTIL AFTER INSTALLATION.
THE PTFE/STAINLESS STEEL INTERFACE OF ALL BEARINGS SHALL BE PERMANENTLY LUBRICATED AFTER TESTING.
STEEL PLATE GRADE 350 TO AS3678
DOWELS GRADE 350 TO AS367
WELDING CATEGORY SHALL BE SP TO AS1554 PT1.
WELDING SYMBOLS TO AS 1101 PT3.

DRAWING FILE LOCATION / NAME: V:_Vault\Projects\3001\30013046\110_CADD\CAD\DWG\30013046-141.dwg
PLOT DATE: 14 Oct 2021 TIME: 00:01:17

EXTERNAL REFERENCE FILES: X_30013046_SMEC_A1; X_DES_MAIN; X_BRG_PLAN

REV	DATE	AMENDMENT / REVISION DESCRIPTION	WVR No.	APPROVAL
01	10.07.2021	ISSUED FOR TENDER	001	JD
02	20.08.2021	ISSUED FOR TENDER	001	JD
03	14.10.2021	ISSUED FOR TENDER	002	JD

TITLE	NAME
DRAFTER	T.SABAPATHI
DRAFTING CHECK	V.S.KODURU
DESIGNER	V.S.KODURU
DESIGN CHECK	V.BALAKRISHNAN
PROJECT MANAGER	J.DICKERSON
PROJECT DIRECTOR	K.LUU

SCALES AT A1 SIZE DRAWING: 0 2500 5000mm; 1250 625; 1:125

DESIGNER: SMEC — Member of the Surbana Jurong Group © ABN 47 065 475 149; LEVEL 5, 20 BERRY STREET NORTH SYDNEY NSW 2060; SMEC PROJECT No 30013046

CLIENT: FRASERS PROPERTY

PROJECT TITLE: SHRIMPTON CREEK BRIDGE
BEARINGS

SCALE	PHASE	PROJECT / DRAWING No.	REVISION
AS NOTED	TENDER	30013046-141	03

150 mm ON ORIGINAL
A1

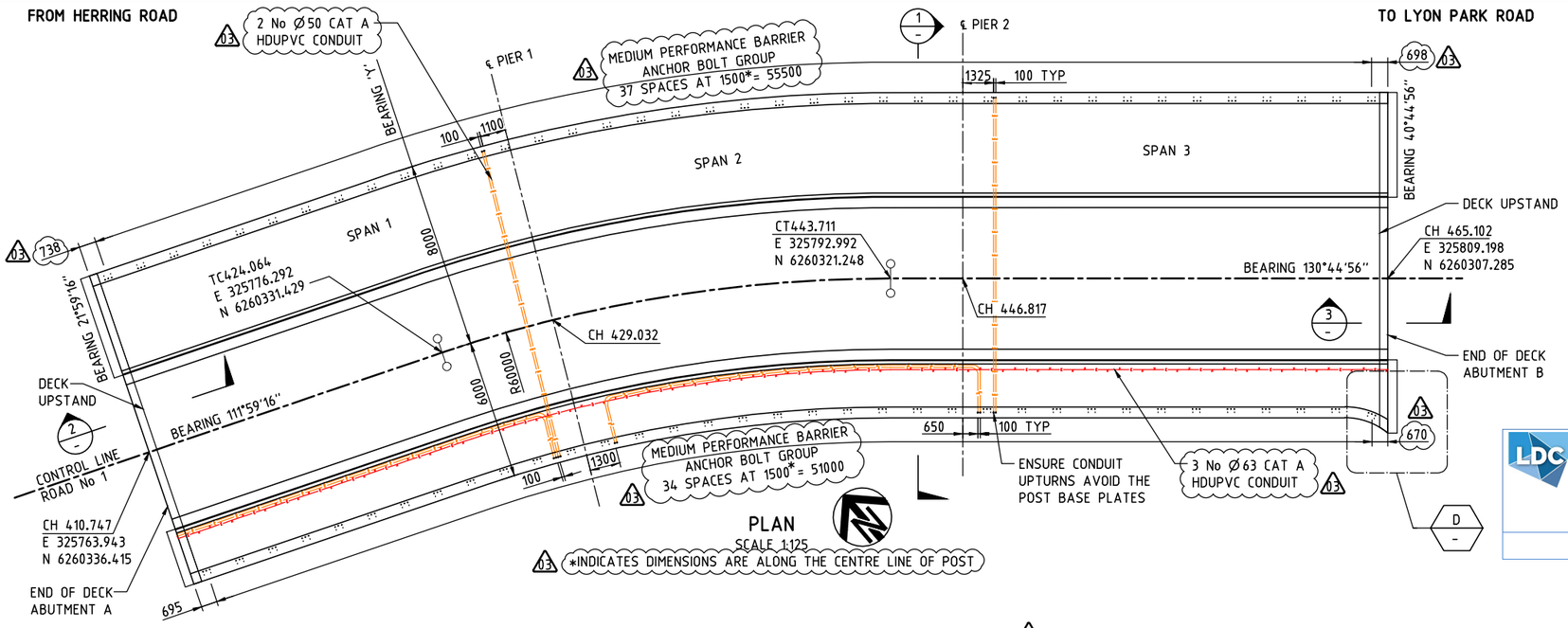

PLAN
SCALE 1:125

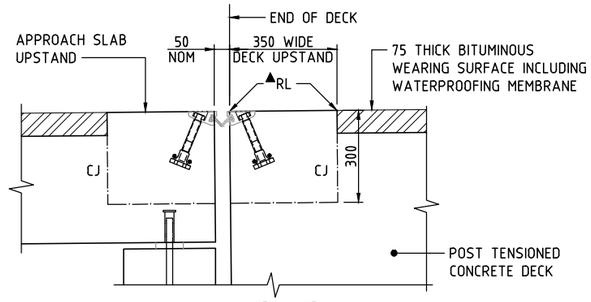

SECTION 2 / 3 — SIMILAR BUT TO OPPOSITE HAND
SCALE 1:10

FOR ▲ RL'S REFER TABLES 1
FOR EXPANSION JOINT DETAILS, REFER DRG No 201, 202

These plans are referred to in certificate no. 16746 approved by:
Eric Hausfeld
Registered Certifier
Registration No: BDC 2416
Categories: Certifier – Subdivision; Certifier – Strata; Certifier – Stormwater; Certifier – Road & Drainage; Certifier – Hydraulic (stormwater)
Land Development Certificates
www.LDC.com.au

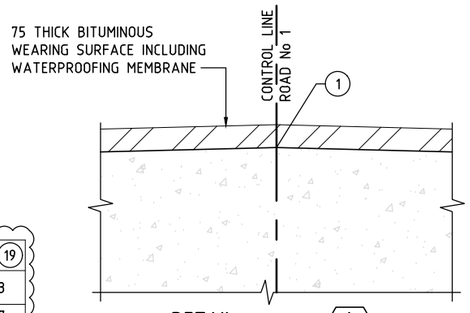

DETAIL A
SCALE 1:10

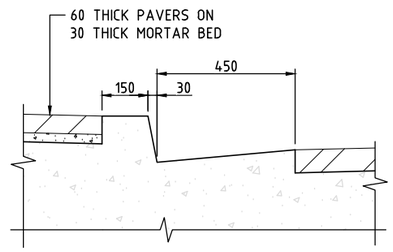

DETAIL B / C — SIMILAR BUT TO OPPOSITE HAND
SCALE 1:10

TABLE 1 - DECK SETTING OUT

LOCATION	STATION	BEARING 'Y'	POINT 1	POINT 2	POINT 3	POINT 4	POINT 5	POINT 6	POINT 7	POINT 8	POINT 9	POINT 10	POINT 11	POINT 12	POINT 13	POINT 14	POINT 15	POINT 16	POINT 17	POINT 18	POINT 19
END OF DECK AT ABUTMENT A	410.747	21°59'16"	▲ 46.729	▲ 46.653	▲ 46.653	▲ 46.613	▲ 46.763	▲ 46.762	▲ 46.762	▲ 46.858	▲ 46.923	▲ 46.933	▲ 46.653	▲ 46.653	▲ 46.613	▲ 46.763	▲ 46.762	▲ 46.762	▲ 46.808	▲ 46.873	▲ 46.883
UPSTAND	411.097	21°59'16"	▲ 46.732	▲ 46.656	▲ 46.656	▲ 46.616	▲ 46.766	▲ 46.766	▲ 46.766	▲ 46.862	▲ 46.927	▲ 46.937	▲ 46.656	▲ 46.656	▲ 46.616	▲ 46.766	▲ 46.766	▲ 46.766	▲ 46.812	▲ 46.877	▲ 46.887
SPAN 1	420.000	21°59'16"	46.741	46.664	46.739	46.699	46.849	46.849	46.759	46.855	47.010	47.020	46.664	46.739	46.699	46.849	46.849	46.759	46.805	46.960	46.970
	424.064	21°59'16"	46.779	46.702	46.777	46.737	46.887	46.887	46.797	46.893	47.048	47.058	46.702	46.777	46.737	46.887	46.887	46.797	46.842	46.998	47.008
℄ PIER 1	429.032	26°43'54"	46.825	46.749	46.824	46.784	46.934	46.933	46.843	46.939	47.094	47.104	46.749	46.824	46.784	46.934	46.933	46.843	46.889	47.044	47.054
SPAN 2	440.000	37°12'19"	46.928	46.851	46.926	46.886	47.036	47.036	46.946	47.042	47.197	47.207	46.851	46.926	46.886	47.036	47.036	46.946	46.992	47.147	47.157
	443.711	40°44'56"	46.962	46.886	46.961	46.921	47.071	47.070	46.980	47.076	47.231	47.241	46.886	46.961	46.921	47.071	47.070	46.980	47.026	47.181	47.191
℄ PIER 2	446.817	40°44'56"	46.991	46.915	46.990	46.950	47.100	47.100	47.010	47.106	47.261	47.271	46.915	46.990	46.950	47.100	47.100	47.010	47.056	47.211	47.221
SPAN 3	450.000	40°44'56"	47.021	46.945	47.020	46.980	47.130	47.129	47.039	47.135	47.290	47.300	46.945	47.020	46.980	47.130	47.129	47.039	47.085	47.240	47.250
	460.000	40°44'56"	47.115	47.038	47.113	47.073	47.223	47.223	47.133	47.229	47.384	47.394	47.038	47.113	47.073	47.223	47.223	47.133	47.179	47.334	47.344
	463.258	40°44'56"	47.145	47.068	47.143	47.103	47.253	47.253	47.163	47.255	47.410	47.420	47.068	47.143	47.103	47.253	47.253	47.163	47.205	47.360	47.370
UPSTAND	464.752	40°44'56"	▲ 47.234	▲ 47.158	▲ 47.158	▲ 47.118	▲ 47.268	▲ 47.267	▲ 47.267	▲ 47.363	▲ 47.428	▲ 47.438	▲ 47.158	▲ 47.158	▲ 47.118	▲ 47.268	▲ 47.267	▲ 47.267	▲ 47.321	▲ 47.386	▲ 47.398
END OF DECK AT ABUTMENT B	465.102	40°44'56"	▲ 47.237	▲ 47.161	▲ 47.161	▲ 47.121	▲ 47.271	▲ 47.270	▲ 47.270	▲ 47.366	▲ 47.431	▲ 47.441	▲ 47.161	▲ 47.161	▲ 47.121	▲ 47.271	▲ 47.270	▲ 47.270	▲ 47.329	▲ 47.394	▲ 47.407

▲ DENOTES RL's AT END OF DECK AND UPSTAND AS SHOWN IN SECTION 2 AND 3.
END OF DECK AND UPSTAND RL's SHOWN MAKE NO ALLOWANCE FOR COVER PLATE RECESSES WHERE APPLICABLE.

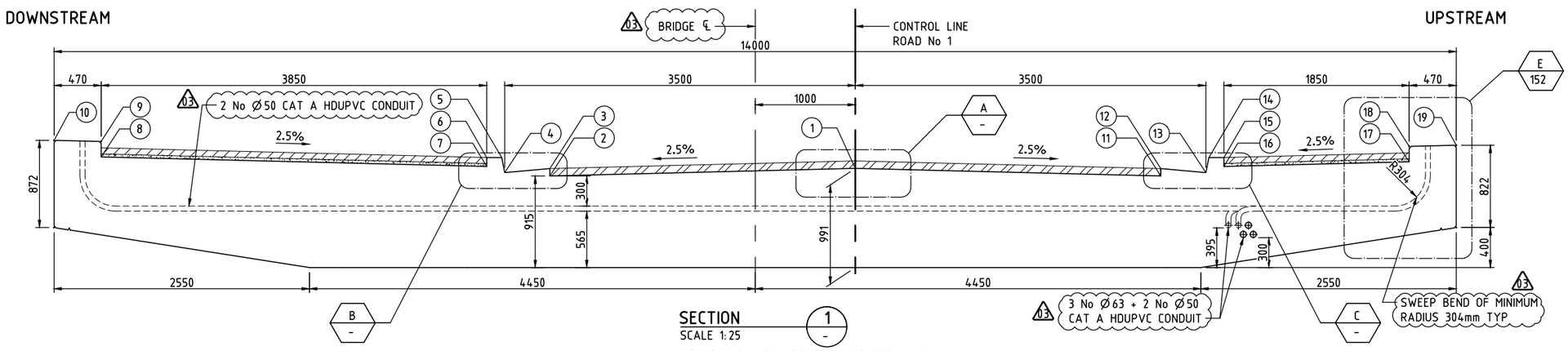

SECTION 1
SCALE 1:25

(FOR SET OUT OF VOID REFER TO DRG No 152)

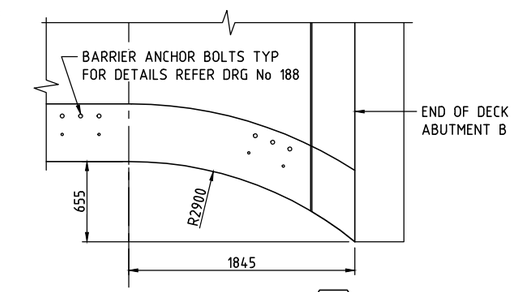

DETAIL D
SCALE 1:10

GENERAL NOTES
FOR GENERAL NOTES RELATING TO THIS DRAWING, REFER DRG No 152.

DRAWING FILE LOCATION / NAME	PLOT DATE	TIME
V:_Vault\Projects\3001\30013046\110_CADD\CAD\DWG\30013046-151.dwg	13 Oct 2021	21:56:12

EXTERNAL REFERENCE FILES: X_30013046_SMEC_A1; X_BRG_PLAN; X_DES_MAIN; X_BRG_SEC

REV	DATE	AMENDMENT / REVISION DESCRIPTION	WVR No.	APPROVAL
01	10.07.2021	ISSUED FOR TENDER	001	JD
02	20.08.2021	ISSUED FOR TENDER	001	JD
03	14.10.2021	ISSUED FOR TENDER	002	JD

TITLE	NAME
DRAFTER	T.SABAPATHI
DRAFTING CHECK	V.S.KODURU
DESIGNER	V.S.KODURU
DESIGN CHECK	V.BALAKRISHNAN
PROJECT MANAGER	J.DICKERSON
PROJECT DIRECTOR	K.LUU

SCALES AT A1 SIZE DRAWING: 0 2500 5000mm; 1250 625; 1:125

DESIGNER: SMEC — Member of the Surbana Jurong Group — © ABN 47 065 475 149 — LEVEL 5, 20 BERRY STREET, NORTH SYDNEY NSW 2060 — SMEC PROJECT No 30013046

CLIENT: FRASERS PROPERTY

PROJECT TITLE: SHRIMPTON CREEK BRIDGE
DECK SETTING OUT

SCALE	PHASE	PROJECT / DRAWING No.	REVISION
AS NOTED	TENDER	30013046-151	03

150 mm ON ORIGINAL — A1

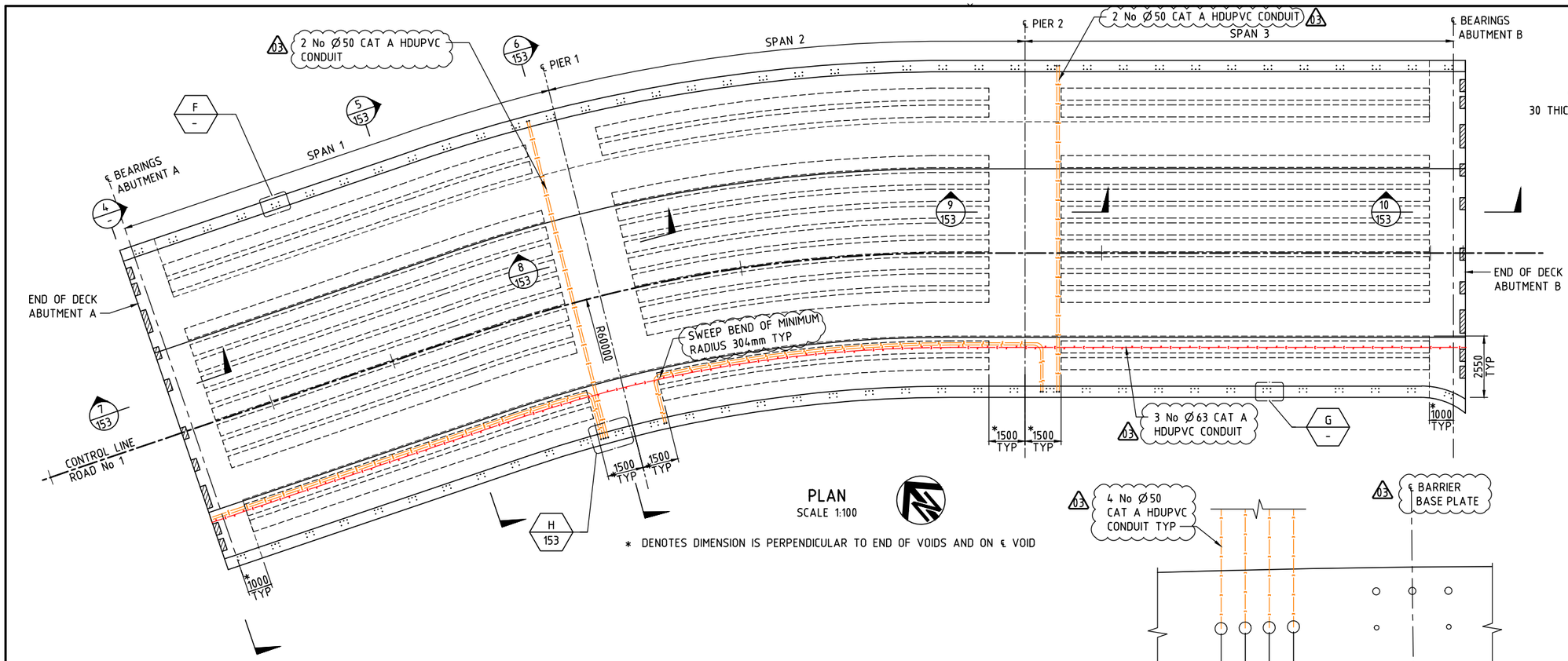

PLAN
SCALE 1:100

* DENOTES DIMENSION IS PERPENDICULAR TO END OF VOIDS AND ON ℄ VOID

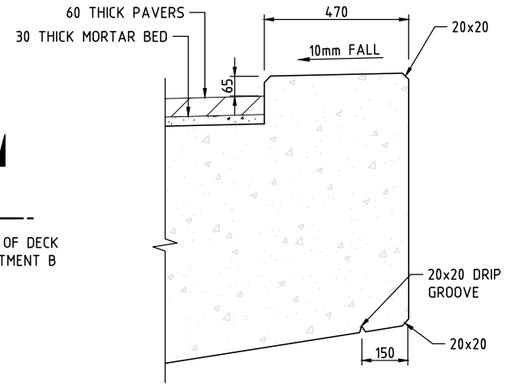

DETAIL E
SCALE 1:10

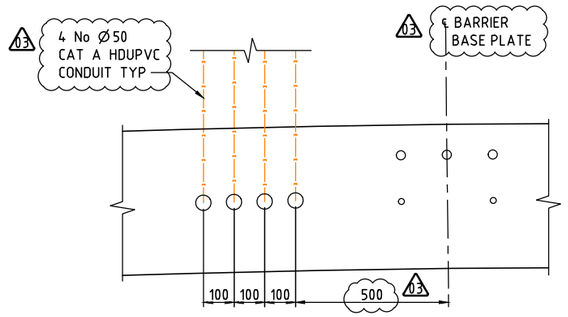

DETAIL (Ø50 ELECTRICAL DUCT) H 152
SCALE 1:10

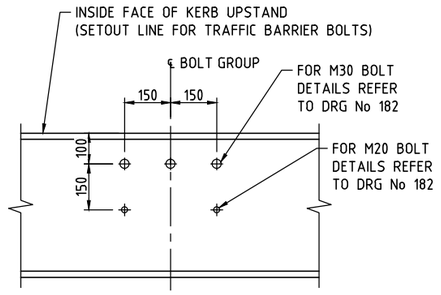

DETAIL G F SIMILAR BUT TO OPPOSITE HAND
SCALE 1:10

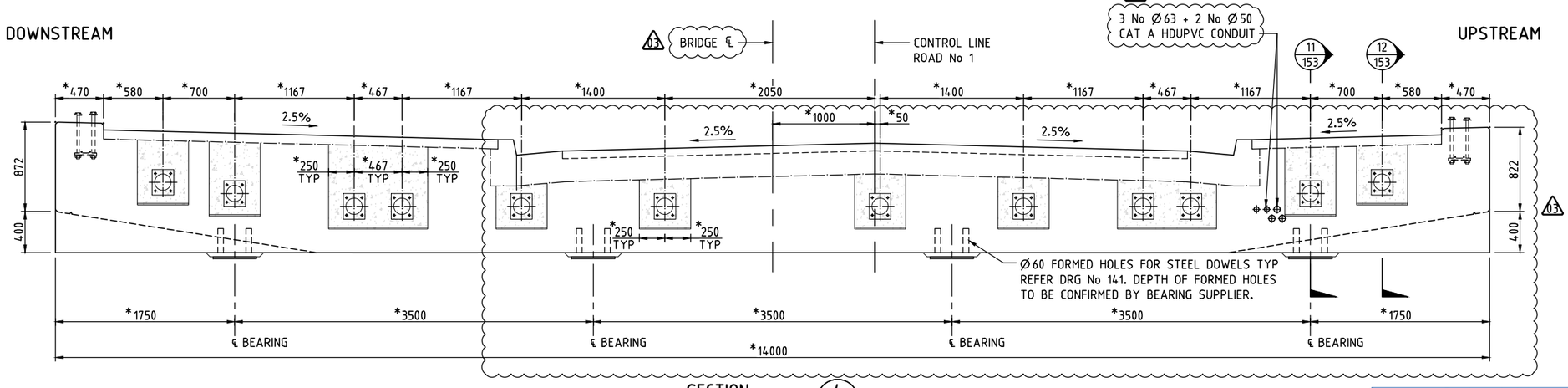

SECTION 4
SCALE 1:25

FOR POST TENSION LAYOUT REFER TO DRG No 161.
* DENOTES DIMENSION ARE OFFSETS ALONG ABUTMENT CENTERLINES.

'-' DENOTES STRAIGHT LINE

GENERAL NOTES

ALL DIMENSIONS ARE IN MILLIMETRES UNLESS NOTED OTHERWISE.
CONCRETE EXPOSURE CLASSIFICATION: B1
MINIMUM 28 DAY COMPRESSIVE STRENGTH OF CONCRETE SHALL BE 40 MPa
EDGES SHALL BE CHAMFERED 20 x 20 AND RE-ENTRANT ANGLES FILLETED 20 x 20 UNLESS NOTED OTHERWISE.
CONSTRUCTION JOINT ONLY AT THE LOCATIONS NOMINATED ON THE DRAWINGS.
REFER TO TABLE 1 FOR SETTING OUT DETAILS.
ALL REDUCE LEVELS SHOWN ARE TO DESIGN FINISHED CONCRETE LEVELS.
THE CONTRACTOR SHALL ALLOW FOR SETTLEMENT OF FALSEWORK DURING CONSTRUCTION.
EXPOSED CONCRETE SURFACE TO HAVE SMOOTH FINISH.

These plans are referred to in certificate no. 16746 approved by:
Eric Hausfeld
Registered Certifier
Registration No: BDC 2416
Categories: Certifier – Subdivision, Certifier – Strata, Certifier – Stormwater, Certifier – Road & Drainage, Certifier – Hydraulic (stormwater)
Land Development Certificates
www.LDC.com.au

DRAWING FILE LOCATION / NAME: V:_Vault\Projects\3001\30013046\110_CADD\CAD\DWG\30013046-152.dwg
PLOT DATE: 13 Oct 2021 TIME: 21:56:02

EXTERNAL REFERENCE FILES: X_30013046_SMEC_A1, X_BRG_PLAN, X_BRG_SEC, X_DES_MAIN

REV	DATE	AMENDMENT / REVISION DESCRIPTION	WVR No.	APPROVAL
01	10.07.2021	ISSUED FOR TENDER	001	JD
02	20.08.2021	ISSUED FOR TENDER	001	JD
03	14.10.2021	ISSUED FOR TENDER	002	JD

TITLE	NAME
DRAFTER	T.SABAPATHI
DRAFTING CHECK	V.S.KODURU
DESIGNER	V.S.KODURU
DESIGN CHECK	V.BALAKRISHNAN
PROJECT MANAGER	J.DICKERSON
PROJECT DIRECTOR	K.LUU

SCALES AT A1 SIZE DRAWING: 0 1000 2000 3000 4000 5000mm; 1000 500; 1:100

DESIGNER: SMEC
Member of the Surbana Jurong Group
© ABN 47 065 475 149
LEVEL 5, 20 BERRY STREET
NORTH SYDNEY NSW 2060
SMEC PROJECT No 30013046

CLIENT: FRASERS PROPERTY

PROJECT TITLE: SHRIMPTON CREEK BRIDGE
DECK CONCRETE SHEET A

SCALE	PHASE	PROJECT / DRAWING No.	REVISION
AS NOTED	TENDER	30013046-152	03

150 mm ON ORIGINAL
A1

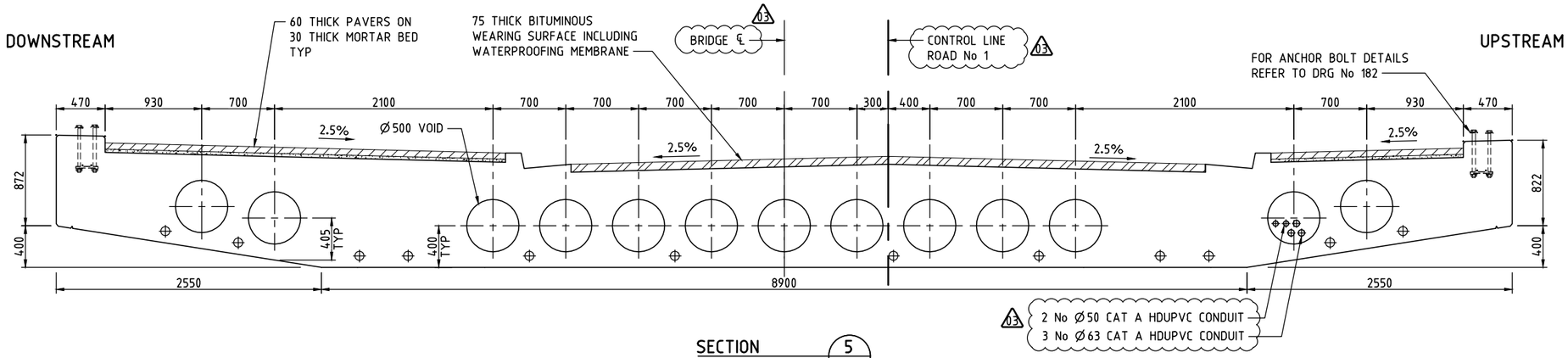

SECTION 5 / 152
SCALE 1:25

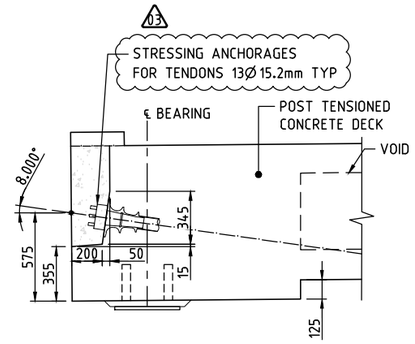

SECTION 11 / 152
SCALE 1:20

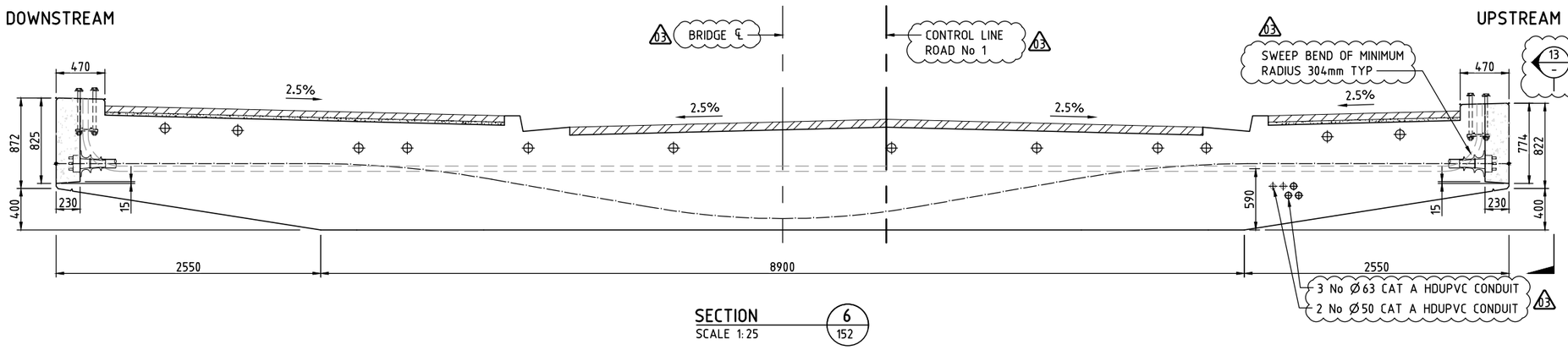

SECTION 6 / 152
SCALE 1:25

FOR POST TENSION LAYOUT REFER TO DRG No 161.

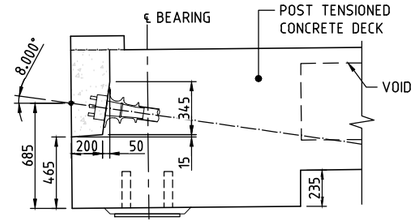

SECTION 12 / 152
SCALE 1:20

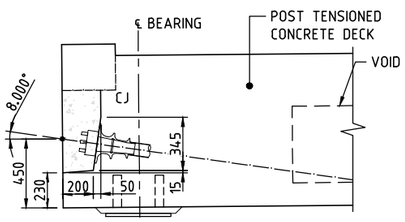

SECTION 7 / 152 10 / 152 SIMILAR BUT TO OPPOSITE HAND
SCALE 1:20

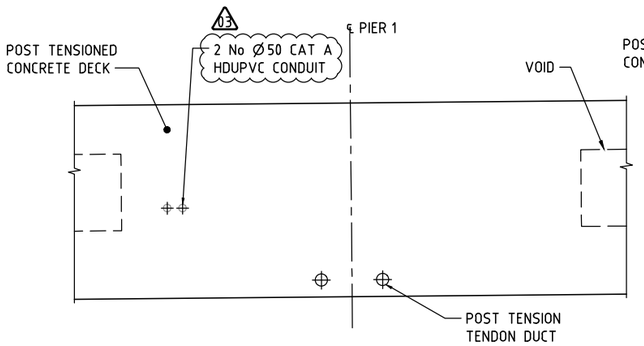

VIEW 8 / 152
SCALE 1:20

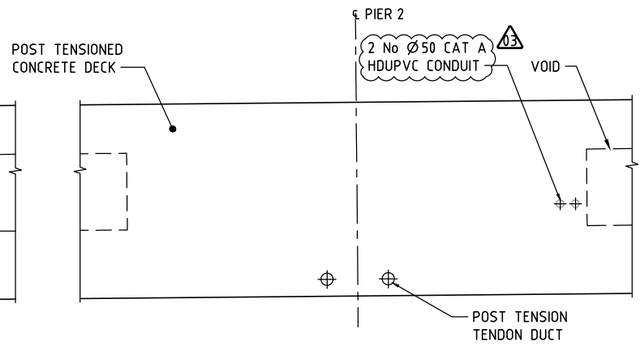

VIEW 9 / 152
SCALE 1:20

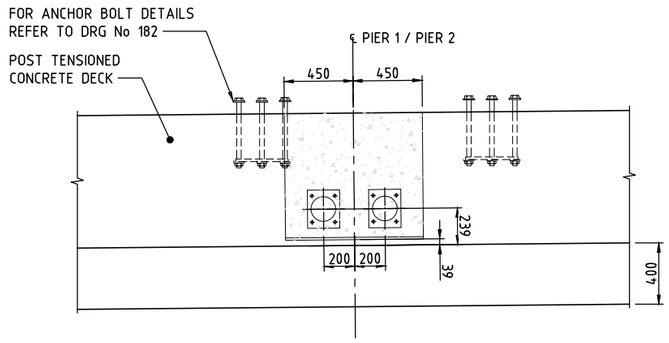

VIEW 13 / 153
SCALE 1:20

These plans are referred to in certificate no. **16746** approved by:
Eric Hausfeld
Registered Certifier
Registration No: BDC 2416
Categories: Certifier – Subdivision, Certifier – Strata, Certifier – Stormwater, Certifier – Road & Drainage, Certifier – Hydraulic (stormwater)
Land Development Certificates
www.LDC.com.au

GENERAL NOTES

FOR GENERAL NOTES RELATING TO THIS DRAWING, REFER DRG No 152.

DRAWING FILE LOCATION / NAME	PLOT DATE	TIME
V:_Vault\Projects\3001\30013046\110_CADD\CAD\DWG\30013046-153.dwg	14 Oct 2021	00:00:28

EXTERNAL REFERENCE FILES: X_30013046_SMEC_A1, X_BRG_SEC, X_BRG_PLAN

REV	DATE	AMENDMENT / REVISION DESCRIPTION	WVR No.	APPROVAL
01	10.07.2021	ISSUED FOR TENDER	001	JD
02	20.08.2021	ISSUED FOR TENDER	001	JD
03	14.10.2021	ISSUED FOR TENDER	002	JD

TITLE	NAME
DRAFTER	T.SABAPATHI
DRAFTING CHECK	V.S.KODURU
DESIGNER	V.S.KODURU
DESIGN CHECK	V.BALAKRISHNAN
PROJECT MANAGER	J.DICKERSON
PROJECT DIRECTOR	K.LUU

SCALES AT A1 SIZE DRAWING: 0 500 1000mm; 250 125; 1:25

DESIGNER: SMEC
Member of the Surbana Jurong Group
© ABN 47 065 475 149
LEVEL 5, 20 BERRY STREET
NORTH SYDNEY NSW 2060
SMEC PROJECT No 30013046

CLIENT: FRASERS PROPERTY

PROJECT TITLE: SHRIMPTON CREEK BRIDGE
DECK CONCRETE
SHEET B

SCALE	PHASE	PROJECT / DRAWING No.	REVISION
AS NOTED	TENDER	30013046-153	03

150 mm ON ORIGINAL
A1

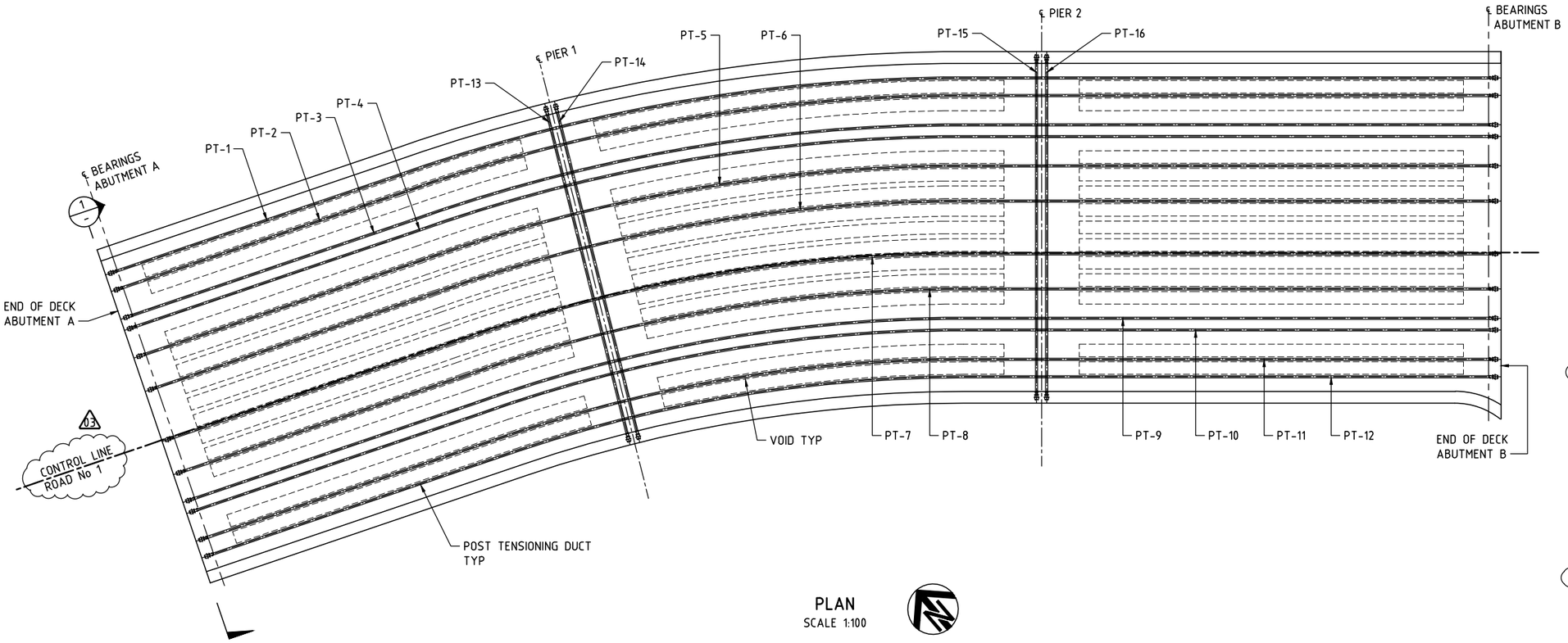

PLAN
SCALE 1:100

GENERAL NOTES
ALL DIMENSIONS ARE IN MILLIMETRES UNLESS NOTED OTHERWISE.

CONCRETE NOTES
MINIMUM COMPRESSIVE STRENGTH CONCRETE AT TRANSFER SHALL BE 40Mpa. FORMWORK/FALSEWORK SUPPORTING THE DECK SHALL NOT BE RELEASED UNTIL STRESSING OF ALL TENDONS IS COMPLETED. EXPOSED CONCRETE SURFACE TO HAVE SMOOTH FINISH.

POST-TENSIONING
THE DESIGN HAS BEEN BASED ON THE FREYSSINET C RANGE SYSTEM OF STRESSING ANCHORAGE. AN EQUIVALENT SYSTEM SHALL BE A PROPRIETARY POST-TENSIONING SYSTEM IN ACCORDANCE WITH TfNSW BRIDGE TECHNICAL DIRECTION 2008/11. 03
TENDON SHALL CONSIST OF 13 No. (15.2mm) DIAMETER LOW RELAXATION, STRESS RELIEVED, SUPERGRADE 7 WIRE STRANDS TO AS/NZS 4672.1 (MINIMUM BREAKING LOAD OF 262kN).
DUCTS FOR TENDONS SHALL BE FORMED WITH GALVANISHED SEMI-RIGID STEEL SHEATHING.
DUCT INSIDE DIAMETER IS 80mm. 03
DUCTS SHALL BE RIGIDLY SUPPORTED DURING CONCRETING AND FIXED TO A SMOOTH PROFILE OF THE SPECIFIED POINTS SHOWN ON THE VERTICAL DUCT PROFILE USING A METHOD APPROVED BY THE DESIGN ENGINEER.
OVERALL LENGTHS OF EACH TENDON VARIES.
GROUT VENTS SHALL BE PROVIDED AT ALL ANCHORAGES AND AT CROWN AND SAG POINTS OF ALL DUCT.
FIXING OF DUCTS, GROUTING AND PROTECTION OF ANCHORAGES SHALL COMPLY WITH TfNSW SPECIFICATION B113.
ALL TENDON LOCATIONS ARE MEASURED FROM THE CENTERLINE OF THE DUCT TO THE SOFFIT VERTICALLY.
THE TENDONS SHALL BE STRESSED FROM BOTH ENDS. THE ORDER OF STRESSING SHALL BE PT6, PT7, PT5, PT8, PT4, PT9, PT3, PT10, PT2, PT11, PT1, PT12, PT13, PT14, PT15 AND PT16. 03
ALL STRANDS IN EACH TENDON SHALL BE STRESSED SIMULTANEOUSLY.
CALCULATION OF FRICTION AND DRAW IN LOSSES HAS BEEN BASED ON THE FOLLOWING ASSUMPTIONS:

- FRICTION CURVATURE COEFFICIENT μ = 0.17
- WOBBLE COEFFICIENT β = 0.007 rad/m
- ELASTIC MODULUS OF TENDONS Es = 195000 Mpa
- DRAW IN AT LOCK OFF = 6mm

TENDON DUCTS SHALL BE GROUTED AS SOON AS POSSIBLE AFTER STRESSING.
CALCULATED HOG/DEFLECTIONS OF DECKS ARE:

HOG OF DECK	HOG/DEFLECTION (mm)	ELASTIC MODULUS (Mpa)
AT TRANSFER	3	32800
AT 60 DAYS	4	34800

THEORETICAL TOTAL ELONGATION OF TENDONS (mm)		
TENDON	JACKING FROM ABUTMENT A / PIER 1 END	JACKING FROM ABUTMENT B / PIER 2 END
1	177	177
2	172	172
3	167	167
4	167	167
5	170	170
6	167	167
7	166	166
8	163	163
9	162	162
10	160	160
11	163	163
12	167	167
13	48	48
14	48	48
15	48	48
16	48	48

JACKING FORCE = 75% UTS

These plans are referred to in certificate no. 16746 approved by:
Eric Hausfeld
Registered Certifier
Registration No: BDC 2416
Categories: Certifier – Subdivision, Certifier – Strata, Certifier – Stormwater, Certifier – Road & Drainage, Certifier – Hydraulic (stormwater)
Land Development Certificates
www.LDC.com.au

03

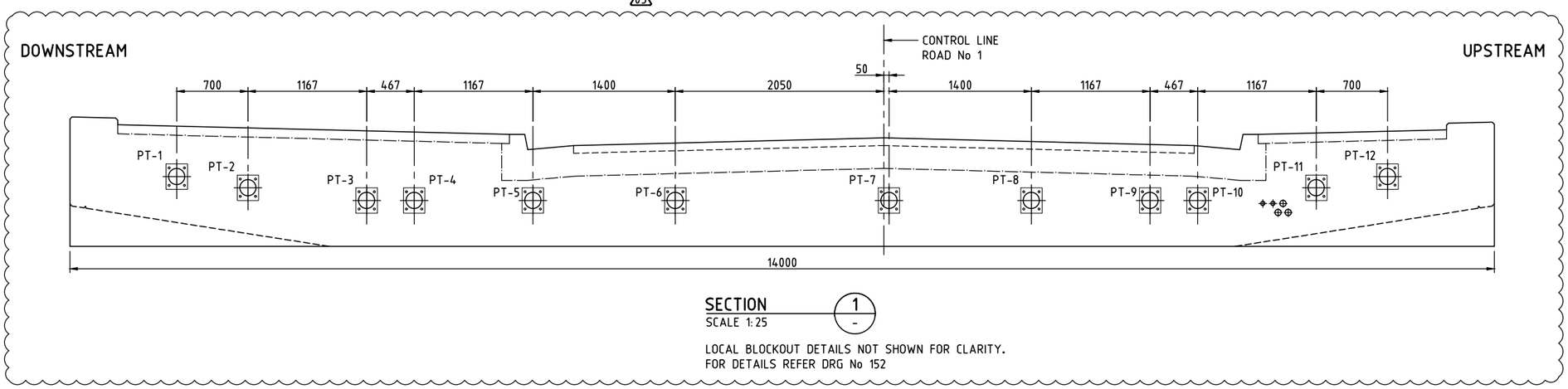

SECTION 1 -
SCALE 1:25

LOCAL BLOCKOUT DETAILS NOT SHOWN FOR CLARITY.
FOR DETAILS REFER DRG No 152

150 mm ON ORIGINAL

DRAWING FILE LOCATION / NAME: V:_Vault\Projects\3001\30013046\110_CADD\CAD\DWG\30013046-161.dwg
PLOT DATE: 13 Oct 2021 TIME: 23:54:57

EXTERNAL REFERENCE FILES: X_30013046_SMEC_A1, X_BRG_PLAN, X_DES_MAIN, X_BRG_SEC

REV	DATE	AMENDMENT / REVISION DESCRIPTION	WVR No.	APPROVAL
01	10.07.2021	ISSUED FOR TENDER	001	JD
02	20.08.2021	ISSUED FOR TENDER	001	JD
03	14.10.2021	ISSUED FOR TENDER	002	JD

TITLE	NAME
DRAFTER	T.SABAPATHI
DRAFTING CHECK	V.S.KODURU
DESIGNER	V.S.KODURU
DESIGN CHECK	V.BALAKRISHNAN
PROJECT MANAGER	J.DICKERSON
PROJECT DIRECTOR	K.LUU

SCALES AT A1 SIZE DRAWING: 0 1000 2000 3000 4000 5000mm; 1000 500; 1:100

DESIGNER: SMEC
Member of the Surbana Jurong Group
© ABN 47 065 475 149
LEVEL 5, 20 BERRY STREET
NORTH SYDNEY NSW 2060
SMEC PROJECT No 30013046

CLIENT: FRASERS PROPERTY

PROJECT TITLE: SHRIMPTON CREEK BRIDGE
DECK POST TENSIONING
SHEET A

SCALE	PHASE	PROJECT / DRAWING No.	REVISION
AS NOTED	TENDER	30013046-161	03

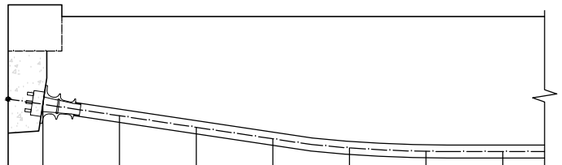

SOFFIT LEVEL							
DISTANCE FROM SOFFIT (mm)	418	343	268	193	133	111	110
LONGITUDINAL OFFSET (mm)	0	500	1000	1500	2000	2500	3000

ABUTMENT A END POST-TENSIONING TENDON DUCT
ELEVATION FOR PT3 TO PT10
SCALE 1:20

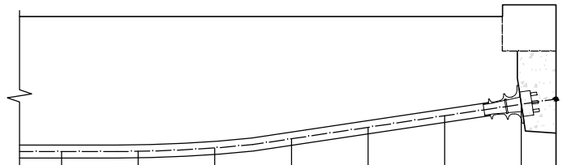

SOFFIT LEVEL							
DISTANCE FROM SOFFIT (mm)	110	111	133	193	268	343	418
LONGITUDINAL OFFSET (mm)	3000	2500	2000	1500	1000	500	0

ABUTMENT B END POST-TENSIONING TENDON DUCT
ELEVATION FOR PT3 TO PT10
SCALE 1:20

03

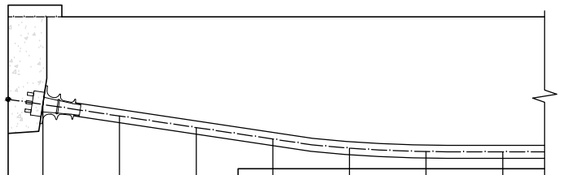

SOFFIT LEVEL									
DISTANCE FROM SOFFIT (mm)	653	(543)	578	(468)	503	(393)	193	133	111	110
LONGITUDINAL OFFSET (mm)	0		500		1000		1500	2000	2500	3000

ABUTMENT A END POST-TENSIONING TENDON DUCT
ELEVATION FOR PT1 AND PT12 (PT2 AND PT11)
SCALE 1:20
VALUES IN BRACKET ARE FOR PT2 AND PT11

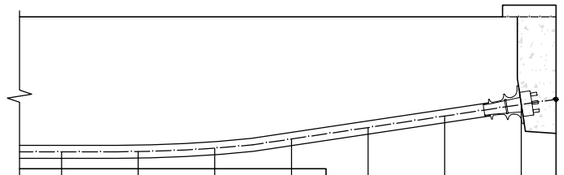

SOFFIT LEVEL									
DISTANCE FROM SOFFIT (mm)	110	111	133	193	503	(393)	578	(468)	653	(543)
LONGITUDINAL OFFSET (mm)	3000	2500	2000	1500	1000		500		0	

ABUTMENT B END POST-TENSIONING TENDON DUCT
ELEVATION FOR PT1 AND PT12 (PT2 AND PT11)
SCALE 1:20
VALUES IN BRACKET ARE FOR PT2 AND PT11

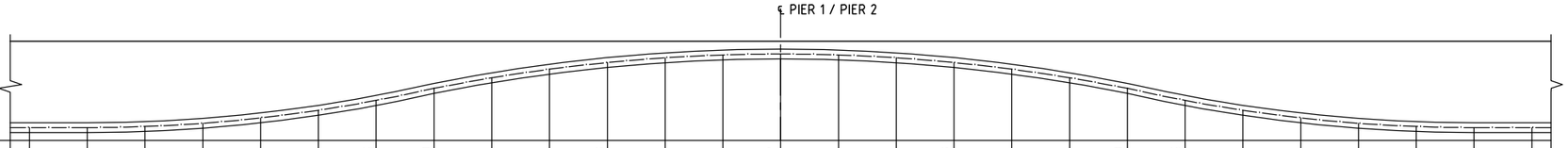

SOFFIT LEVEL																										
DISTANCE FROM SOFFIT (mm)	110	110	119	147	194	260	345	450	541	616	673	714	739	747	739	714	673	616	541	450	345	260	194	147	119	110	110
LONGITUDINAL OFFSET FROM ℄ PIER (mm)	6500	6000	5500	5000	4500	4000	3500	3000	2500	2000	1500	1000	500	0	500	1000	1500	2000	2500	3000	3500	4000	4500	5000	5500	6000	6500

POST-TENSIONING TENDON DUCT LAYOUT AT PIER-TYPICAL
ELEVATION FOR PT1
SCALE 1:25

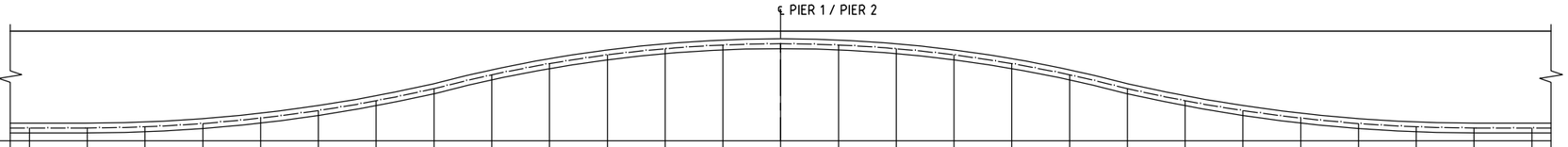

SOFFIT LEVEL																										
DISTANCE FROM SOFFIT (mm)	110	110	119	147	194	260	345	450	570	668	743	796	828	839	828	796	743	668	570	450	345	260	194	147	119	110	110
LONGITUDINAL OFFSET FROM ℄ PIER (mm)	6500	6000	5500	5000	4500	4000	3500	3000	2500	2000	1500	1000	500	0	500	1000	1500	2000	2500	3000	3500	4000	4500	5000	5500	6000	6500

POST-TENSIONING TENDON DUCT LAYOUT AT PIER-TYPICAL
ELEVATION FOR PT2
SCALE 1:25

These plans are referred to in certificate no. **16746** approved by:
Eric Hausfeld
Registered Certifier
Registration No: BDC 2416
Categories: Certifier – Subdivision, Certifier – Strata, Certifier – Stormwater, Certifier – Road & Drainage, Certifier – Hydraulic (stormwater)
Land Development Certificates
www.LDC.com.au

GENERAL NOTES

THIS DRAWING SHALL BE READ IN CONJUNCTION WITH DRG No 161.
ALL TENDON LOCATIONS ARE NOTED TO CENTERLINE OF DUCT FROM THE SOFFIT OF THE BEAM.
FOR OTHER GENERAL NOTES REFER TO DRG No 161.

DRAWING FILE LOCATION / NAME: V:_Vault\Projects\3001\30013046\110_CADD\CAD\DWG\30013046-162.dwg
PLOT DATE: 13 Oct 2021 TIME: 21:55:39

EXTERNAL REFERENCE FILES: X_30013046_SMEC_A1 X_BRG_SEC

REV	DATE	AMENDMENT / REVISION DESCRIPTION	WVR No.	APPROVAL
01	10.07.2021	ISSUED FOR TENDER	001	JD
02	20.08.2021	ISSUED FOR TENDER	001	JD
03	14.10.2021	ISSUED FOR TENDER	002	JD

TITLE	NAME
DRAFTER	T.SABAPATHI
DRAFTING CHECK	V.S.KODURU
DESIGNER	V.S.KODURU
DESIGN CHECK	V.BALAKRISHNAN
PROJECT MANAGER	J.DICKERSON
PROJECT DIRECTOR	K.LUU

SCALES AT A1 SIZE DRAWING: 0 500 1000mm; 250 125; 1:25

DESIGNER: SMEC
Member of the Surbana Jurong Group
© ABN 47 065 475 149
LEVEL 5, 20 BERRY STREET
NORTH SYDNEY NSW 2060
SMEC PROJECT No 30013046

CLIENT: FRASERS PROPERTY

PROJECT TITLE: SHRIMPTON CREEK BRIDGE
DECK POST TENSIONING
SHEET B

SCALE	PHASE	PROJECT / DRAWING No.	REVISION
AS NOTED	TENDER	30013046-162	03

150 mm ON ORIGINAL
A1

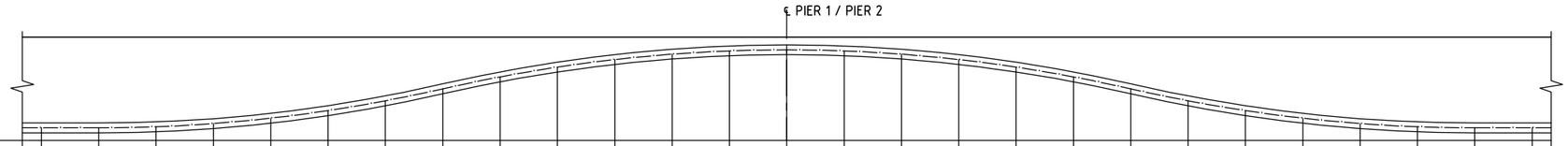

SOFFIT LEVEL																													
DISTANCE FROM SOFFIT (mm)	110	110	119	147	194	260	345	450	555	640	706	753	781	790	781	753	706	640	555	450	345	260	194	147	119	110	110		
LONGITUDINAL OFFSET FROM ℄ PIER (mm)	6500	6000	5500	5000	4500	4000	3500	3000	2500	2000	1500	1000	500	0	500	1000	1500	2000	2500	3000	3500	4000	4500	5000	5500	6000	6500		

POST-TENSIONING TENDON DUCT LAYOUT AT PIER-TYPICAL
ELEVATION FOR PT3 TO PT10

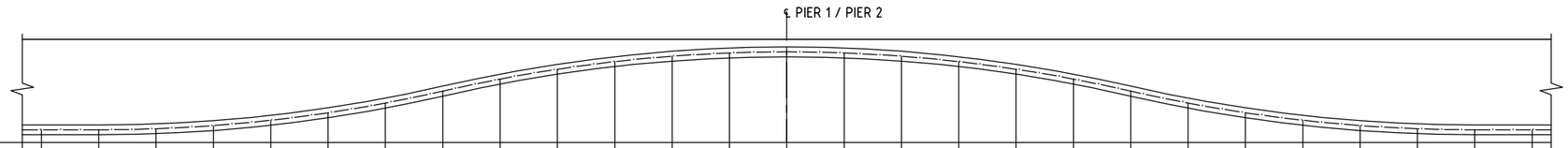

SOFFIT LEVEL																													
DISTANCE FROM SOFFIT (mm)	110	110	119	147	193	259	343	447	552	638	704	751	780	789	780	751	704	638	552	447	343	259	193	147	119	110	110		
LONGITUDINAL OFFSET FROM ℄ PIER (mm)	6500	6000	5500	5000	4500	4000	3500	3000	2500	2000	1500	1000	500	0	500	1000	1500	2000	2500	3000	3500	4000	4500	5000	5500	6000	6500		

POST-TENSIONING TENDON DUCT LAYOUT AT PIER-TYPICAL
ELEVATION FOR PT11

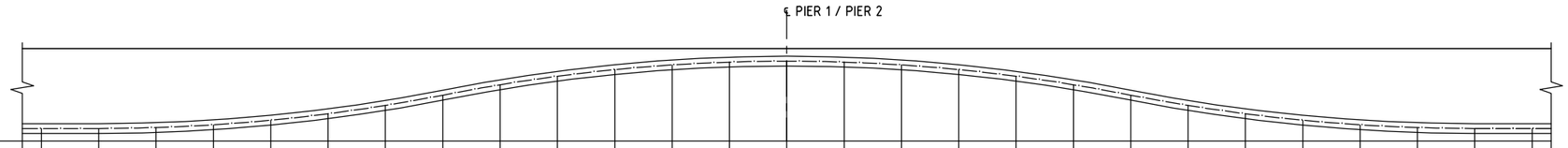

SOFFIT LEVEL																													
DISTANCE FROM SOFFIT (mm)	110	110	118	141	181	238	310	399	491	565	622	663	688	696	688	663	622	565	491	399	310	238	181	141	118	110	110		
LONGITUDINAL OFFSET FROM ℄ PIER (mm)	6500	6000	5500	5000	4500	4000	3500	3000	2500	2000	1500	1000	500	0	500	1000	1500	2000	2500	3000	3500	4000	4500	5000	5500	6000	6500		

POST-TENSIONING TENDON DUCT LAYOUT AT PIER-TYPICAL
ELEVATION FOR PT12

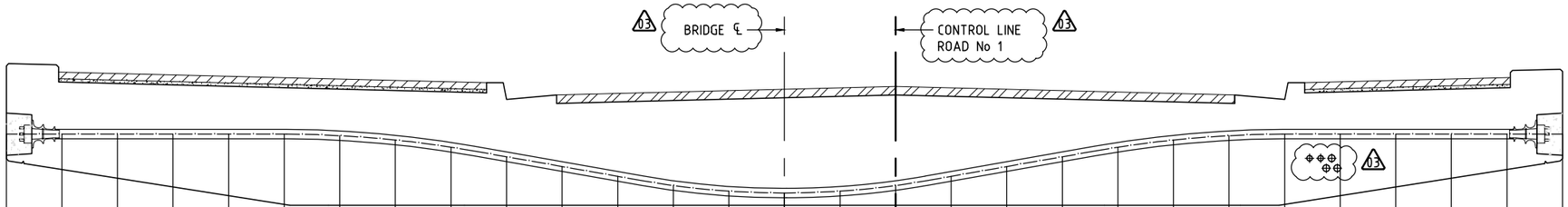

SOFFIT LEVEL																													
DISTANCE FROM SOFFIT (mm)	239	318	397	475	553	632	625	586	521	435	347	260	177	126	110	126	177	260	347	435	521	586	625	632	553	475	397	318	239
TRANSVERSE OFFSET FROM ℄ BRIDGE CONTROL LINE (mm)	7000	6500	6000	5500	5000	4500	4000	3500	3000	2500	2000	1500	1000	500	0	500	1000	1500	2000	2500	3000	3500	4000	4500	5000	5500	6000	6500	7000

TRANSVERSE POST-TENSIONING TENDON DUCT LAYOUT AT PIER-TYPICAL
ELEVATION FOR PT13 TO PT16

These plans are referred to in certificate no. **16746** approved by:
Eric Hausfeld
Registered Certifier
Registration No: BDC 2416
Categories: Certifier – Subdivision
Certifier – Strata
Certifier – Stormwater
Certifier – Road & Drainage
Certifier – Hydraulic (stormwater)
Land Development Certificates
www.LDC.com.au

GENERAL NOTES

THIS DRAWING SHALL BE READ IN CONJUNCTION WITH DRG No 161.
ALL TENDON LOCATIONS ARE NOTED TO CENTERLINE OF DUCT FROM THE SOFFIT OF THE BEAM.
FOR OTHER GENERAL NOTES REFER TO DRG No 161.

DRAWING FILE LOCATION / NAME	PLOT DATE	TIME
V:_Vault\Projects\3001\30013046\110_CADD\CAD\DWG\30013046-163.dwg	14 Oct 2021	00:05:42

EXTERNAL REFERENCE FILES: X_30013046_SMEC_A1, X_BRG_SEC

REV	DATE	AMENDMENT / REVISION DESCRIPTION	WVR No.	APPROVAL
01	10.07.2021	ISSUED FOR TENDER	001	JD
02	20.08.2021	ISSUED FOR TENDER	001	JD
03	14.10.2021	ISSUED FOR TENDER	002	JD

TITLE	NAME
DRAFTER	T.SABAPATHI
DRAFTING CHECK	V.S.KODURU
DESIGNER	V.S.KODURU
DESIGN CHECK	V.BALAKRISHNAN
PROJECT MANAGER	J.DICKERSON
PROJECT DIRECTOR	K.LUU

SCALES AT A1 SIZE DRAWING: 0 500 1000mm; 250 125; 1:25

DESIGNER: SMEC
Member of the Surbana Jurong Group
© ABN 47 065 475 149
LEVEL 5, 20 BERRY STREET
NORTH SYDNEY NSW 2060
SMEC PROJECT No 30013046

CLIENT: FRASERS PROPERTY

PROJECT TITLE: SHRIMPTON CREEK BRIDGE
DECK POST TENSIONING
SHEET C

SCALE	PHASE	PROJECT / DRAWING No.	REVISION
AS NOTED	TENDER	30013046-163	03

150 mm ON ORIGINAL
A1

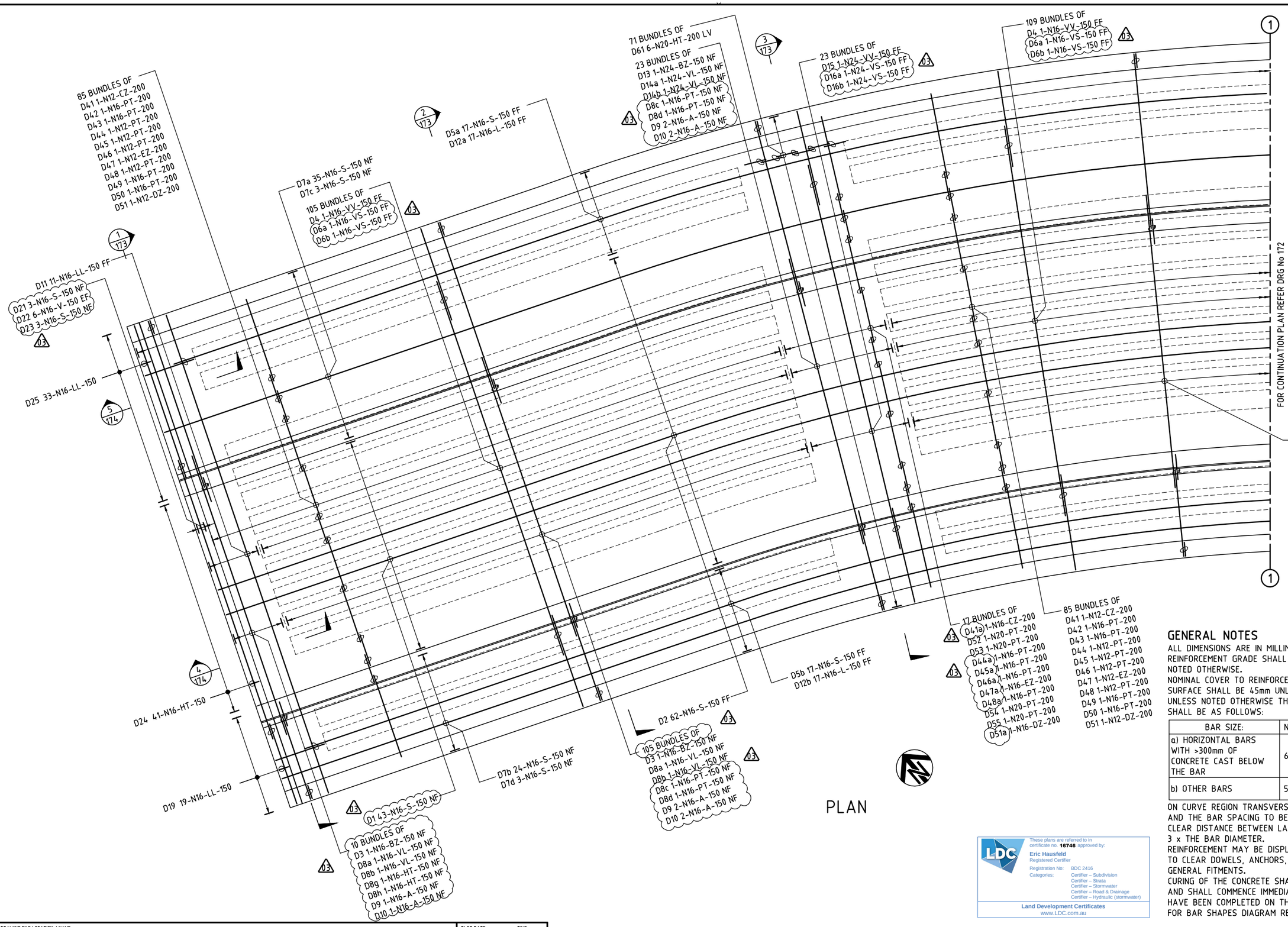

PLAN

GENERAL NOTES

ALL DIMENSIONS ARE IN MILLIMETRES UNLESS NOTED OTHERWISE.
REINFORCEMENT GRADE SHALL BE D500N TO AS/NZS UNLESS NOTED OTHERWISE.
NOMINAL COVER TO REINFORCEMENT NEAREST TO THE CONCRETE SURFACE SHALL BE 45mm UNLESS NOTED OTHERWISE.
UNLESS NOTED OTHERWISE THE MINIMUM LAP LENGTHS OF BARS SHALL BE AS FOLLOWS:

BAR SIZE:	N12	N16	N20	N24	N28	N32	N36
a) HORIZONTAL BARS WITH >300mm OF CONCRETE CAST BELOW THE BAR	650	900	1150	1430	1730	2060	2410
b) OTHER BARS	500	690	890	1100	1330	1590	1860

ON CURVE REGION TRANSVERSE BARS TO BE PLACED RADIALLY AND THE BAR SPACING TO BE MAINTAINED ON THE OUTER CURVE CLEAR DISTANCE BETWEEN LAPPED BARS SHALL NOT EXCEED 3 x THE BAR DIAMETER.
REINFORCEMENT MAY BE DISPLACED SLIGHTLY WHERE NECESSARY TO CLEAR DOWELS, ANCHORS, DUCTS, DRAINAGE LINES AND GENERAL FITMENTS.
CURING OF THE CONCRETE SHALL NOT INCLUDE CURING COMPOUNDS AND SHALL COMMENCE IMMEDIATELY AFTER FINISHING OPERATIONS HAVE BEEN COMPLETED ON THE CONCRETE BEING PLACED.
FOR BAR SHAPES DIAGRAM REFER DRG No 215.

LDC
These plans are referred to in certificate no: **16746** approved by:
Eric Hausfeld
Registered Certifier
Registration No: BDC 2416
Categories: Certifier – Subdivision
Certifier – Strata
Certifier – Stormwater
Certifier – Road & Drainage
Certifier – Hydraulic (stormwater)
Land Development Certificates
www.LDC.com.au

DRAWING FILE LOCATION / NAME: V:__Vault\Projects\3001\30013046\110_CADD\CAD\DWG\30013046-171.dwg
PLOT DATE: 13 Oct 2021 TIME: 23:48:42

EXTERNAL REFERENCE FILES: X_30013046_SMEC_A1, X_BRG_PLAN, X_DES_MAIN

REV	DATE	AMENDMENT / REVISION DESCRIPTION	WVR No.	APPROVAL
01	10.07.2021	ISSUED FOR TENDER	001	JD
02	20.08.2021	ISSUED FOR TENDER	001	JD
03	14.10.2021	ISSUED FOR TENDER	002	JD

TITLE	NAME
DRAFTER	T.SABAPATHI
DRAFTING CHECK	V.S.KODURU
DESIGNER	V.S.KODURU
DESIGN CHECK	V.BALAKRISHNAN
PROJECT MANAGER	J.DICKERSON
PROJECT DIRECTOR	K.LUU

SCALES AT A1 SIZE DRAWING: 0 1000 2000mm; 500 250; 1:50

DESIGNER: SMEC
Member of the Surbana Jurong Group
© ABN 47 065 475 149
LEVEL 5, 20 BERRY STREET
NORTH SYDNEY NSW 2060
SMEC PROJECT No 30013046

CLIENT: FRASERS PROPERTY

PROJECT TITLE: SHRIMPTON CREEK BRIDGE

DECK REINFORCEMENT
SHEET A

SCALE	PHASE	PROJECT / DRAWING No.	REVISION
AS NOTED	TENDER	30013046-171	03

150 mm ON ORIGINAL
A1

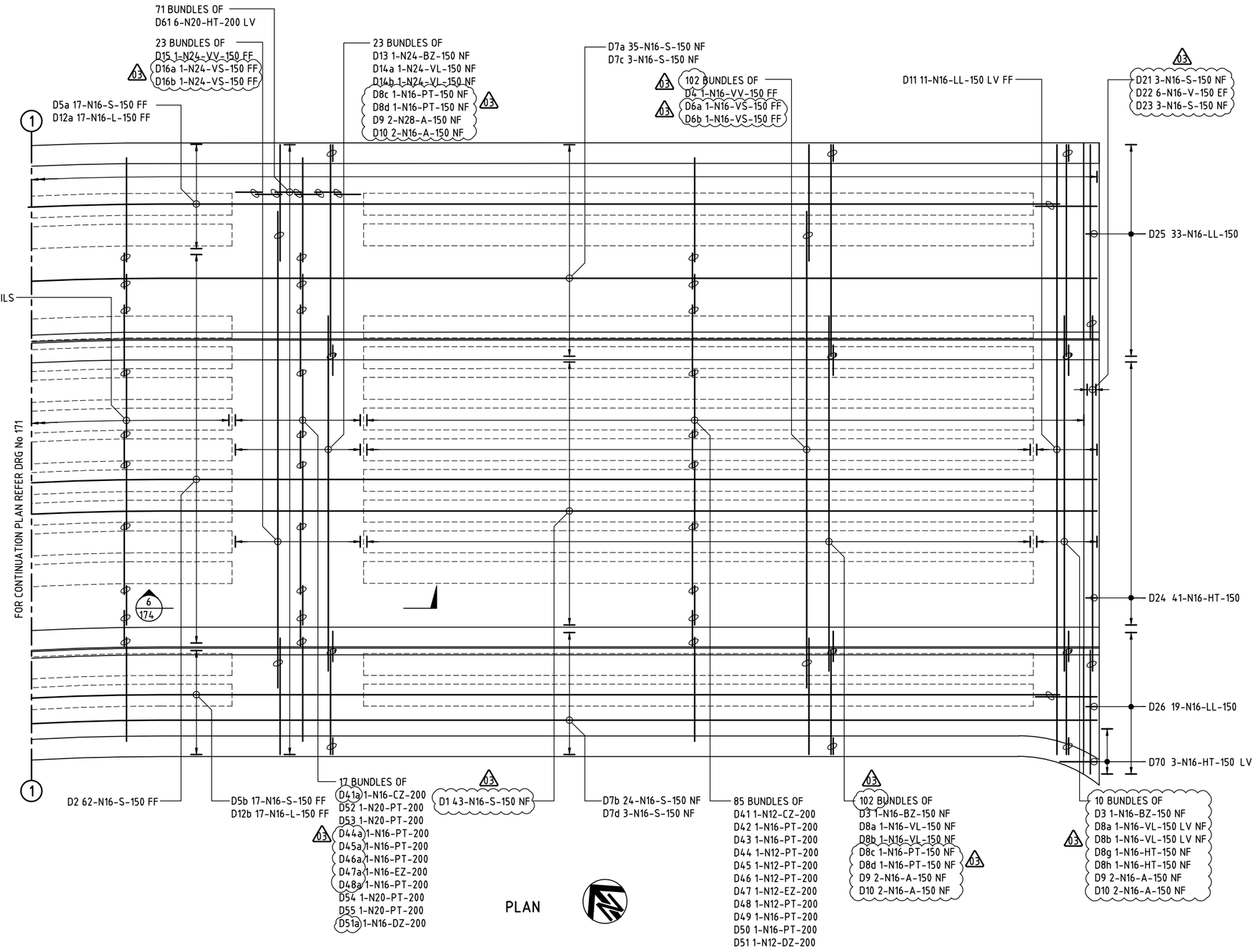

PLAN

These plans are referred to in certificate no. **16746** approved by:
Eric Hausfeld
Registered Certifier
Registration No: BDC 2416
Categories: Certifier – Subdivision; Certifier – Strata; Certifier – Stormwater; Certifier – Road & Drainage; Certifier – Hydraulic (stormwater)
Land Development Certificates
www.LDC.com.au

GENERAL NOTES

FOR OTHER GENERAL NOTES RELATED TO THIS DRAWING, REFER TO DRG No 171.

DRAWING FILE LOCATION / NAME	PLOT DATE	TIME
V:_Vault\Projects\3001\30013046\110_CADD\CAD\DWG\30013046-172.dwg	13 Oct 2021	23:50:10

EXTERNAL REFERENCE FILES: X_30013046_SMEC_A1, X_BRG_PLAN, X_DES_MAIN

REV	DATE	AMENDMENT / REVISION DESCRIPTION	WVR No.	APPROVAL
01	10.07.2021	ISSUED FOR TENDER	001	JD
02	20.08.2021	ISSUED FOR TENDER	001	JD
03	14.10.2021	ISSUED FOR TENDER	002	JD

TITLE	NAME
DRAFTER	T.SABAPATHI
DRAFTING CHECK	V.S.KODURU
DESIGNER	V.S.KODURU
DESIGN CHECK	V.BALAKRISHNAN
PROJECT MANAGER	J.DICKERSON
PROJECT DIRECTOR	K.LUU

SCALES AT A1 SIZE DRAWING: 0 1000 2000mm; 500 250; 1:50

DESIGNER: SMEC
Member of the Surbana Jurong Group
© ABN 47 065 475 149
LEVEL 5, 20 BERRY STREET
NORTH SYDNEY NSW 2060
SMEC PROJECT No 30013046

CLIENT: FRASERS PROPERTY

PROJECT TITLE: SHRIMPTON CREEK BRIDGE

DECK REINFORCEMENT SHEET B

SCALE	PHASE	PROJECT / DRAWING No.	REVISION
AS NOTED	TENDER	30013046-172	03

150 mm ON ORIGINAL
A1

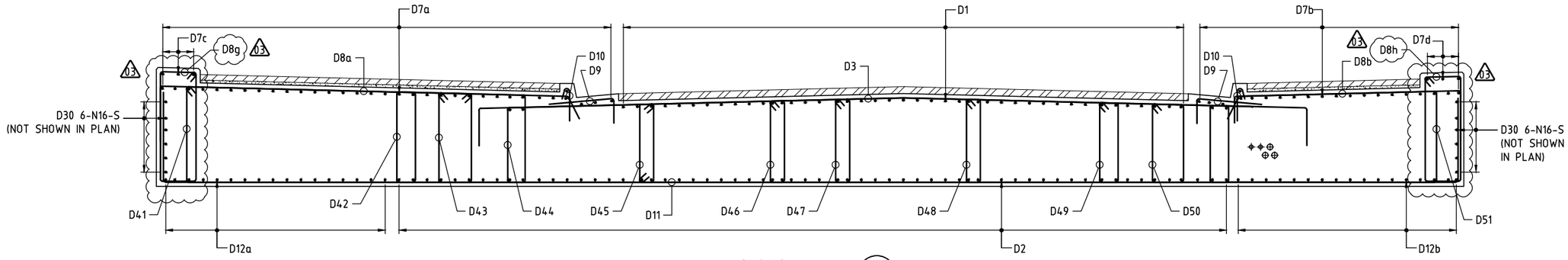

SECTION 1
SCALE 1:25
171

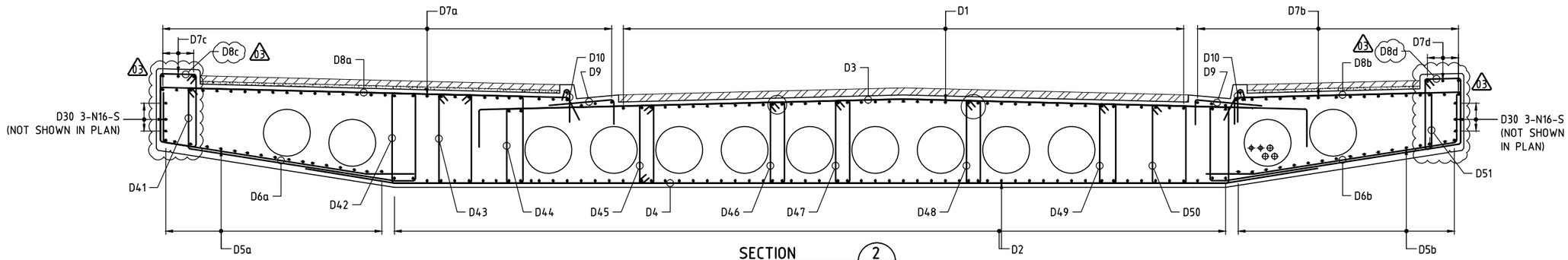

SECTION 2
SCALE 1:25
171

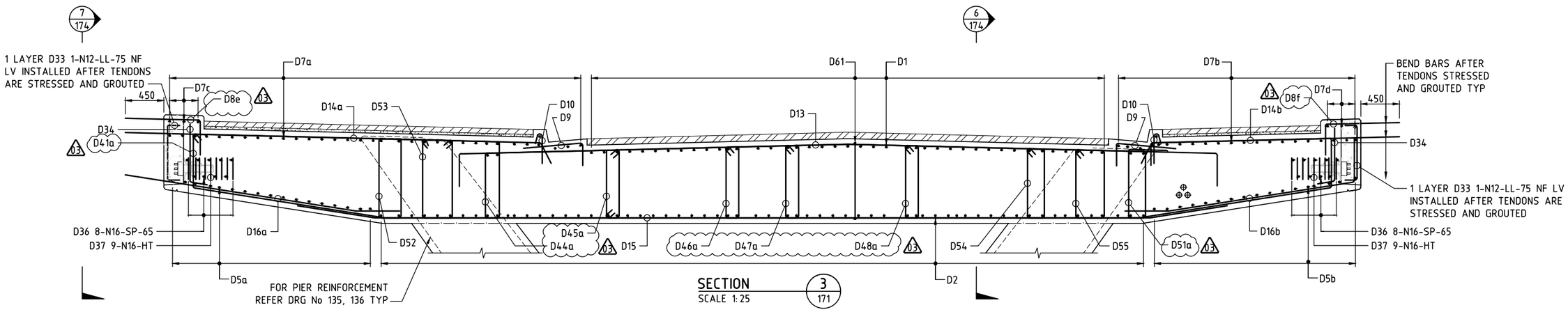

SECTION 3
SCALE 1:25
171

DENOTES D33, D34, D35, D36 & D37 NOT SHOWN IN PLAN

These plans are referred to in certificate no. **16746** approved by:
Eric Hausfeld
Registered Certifier
Registration No: BDC 2416
Categories: Certifier – Subdivision, Certifier – Strata, Certifier – Stormwater, Certifier – Road & Drainage, Certifier – Hydraulic (stormwater)
Land Development Certificates
www.LDC.com.au

GENERAL NOTES

FOR OTHER GENERAL NOTES RELATED TO THIS DRAWING, REFER TO DRG No 171.

DRAWING FILE LOCATION / NAME	PLOT DATE	TIME
V:_Vault\Projects\3001\30013046\110_CADD\CAD\DWG\30013046-173.dwg	13 Oct 2021	23:46:04

EXTERNAL REFERENCE FILES: X_30013046_SMEC_A1, X_BRG_SEC

REV	DATE	AMENDMENT / REVISION DESCRIPTION	WVR No.	APPROVAL
01	10.07.2021	ISSUED FOR TENDER	001	JD
02	20.08.2021	ISSUED FOR TENDER	001	JD
03	14.10.2021	ISSUED FOR TENDER	002	JD

TITLE	NAME
DRAFTER	T.SABAPATHI
DRAFTING CHECK	V.S.KODURU
DESIGNER	V.S.KODURU
DESIGN CHECK	V.BALAKRISHNAN
PROJECT MANAGER	J.DICKERSON
PROJECT DIRECTOR	K.LUU

SCALES AT A1 SIZE DRAWING: 0 500 1000mm; 250 125; 1:25

DESIGNER: SMEC
Member of the Surbana Jurong Group
© ABN 47 065 475 149
LEVEL 5, 20 BERRY STREET
NORTH SYDNEY NSW 2060
SMEC PROJECT No 30013046

CLIENT: FRASERS PROPERTY

PROJECT TITLE: SHRIMPTON CREEK BRIDGE

DECK REINFORCEMENT SHEET C

SCALE	PHASE	PROJECT / DRAWING No.	REVISION
AS NOTED	TENDER	30013046-173	03

150 mm ON ORIGINAL
A1

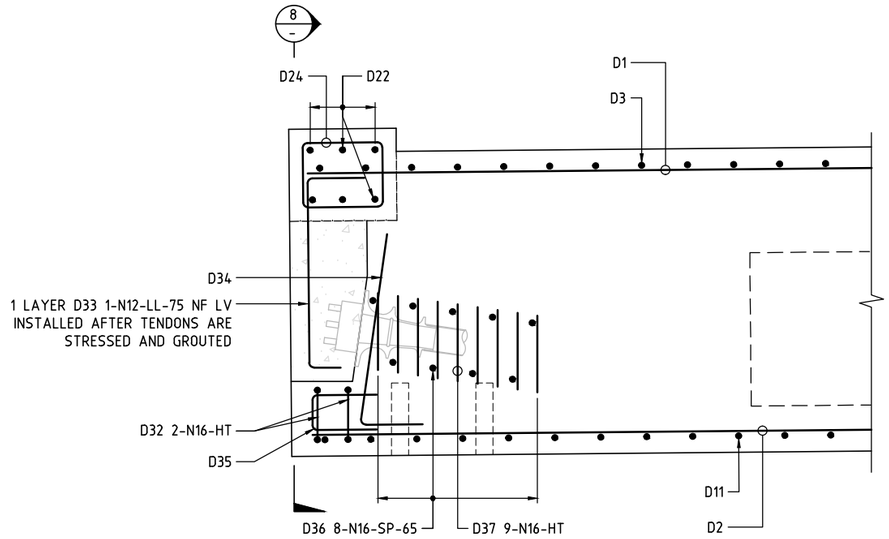

SECTION 4 / 171
SCALE 1:10
SHEAR STIRRUPS NOT
SHOWN FOR CLARITY

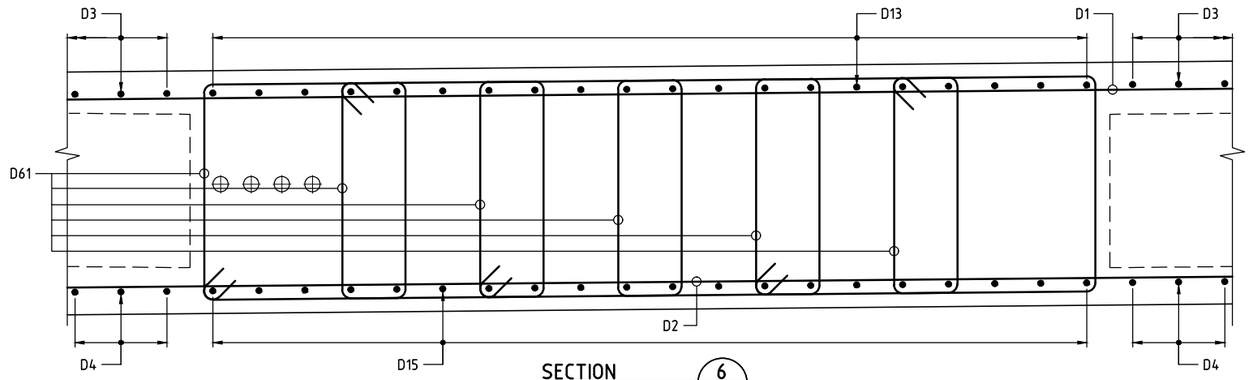

SECTION 6 / 172
SCALE 1:10

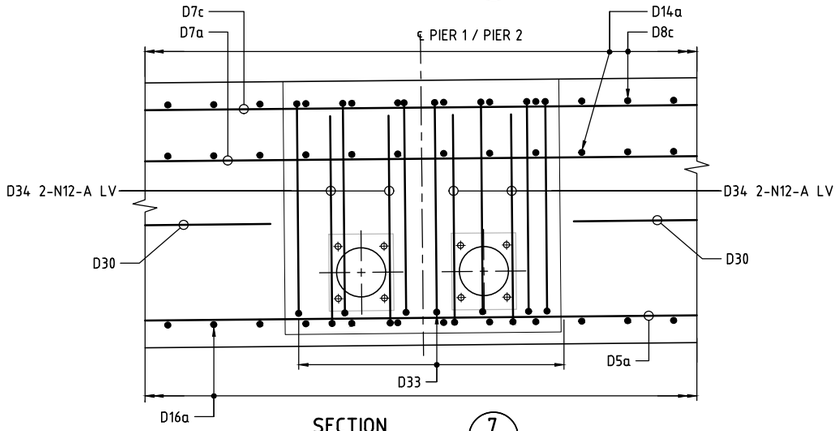

SECTION 7 / 173
SCALE 1:10

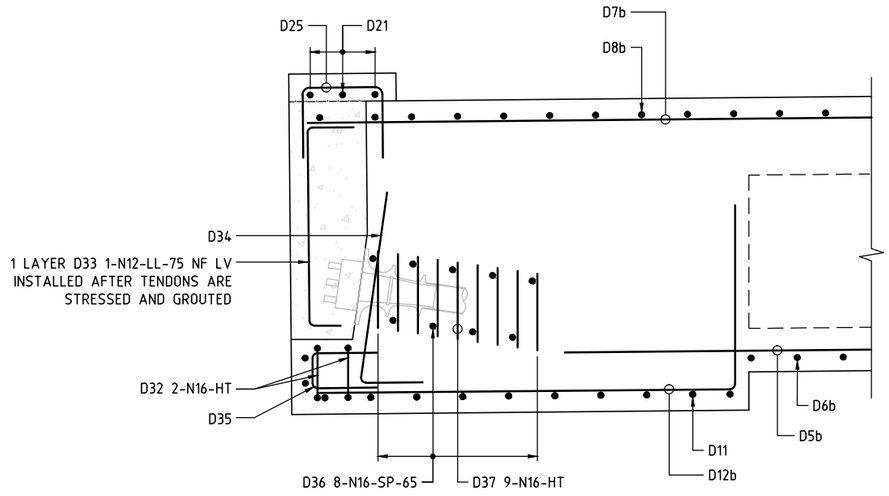

SECTION 5 / 171
SCALE 1:10
SHEAR STIRRUPS NOT
SHOWN FOR CLARITY

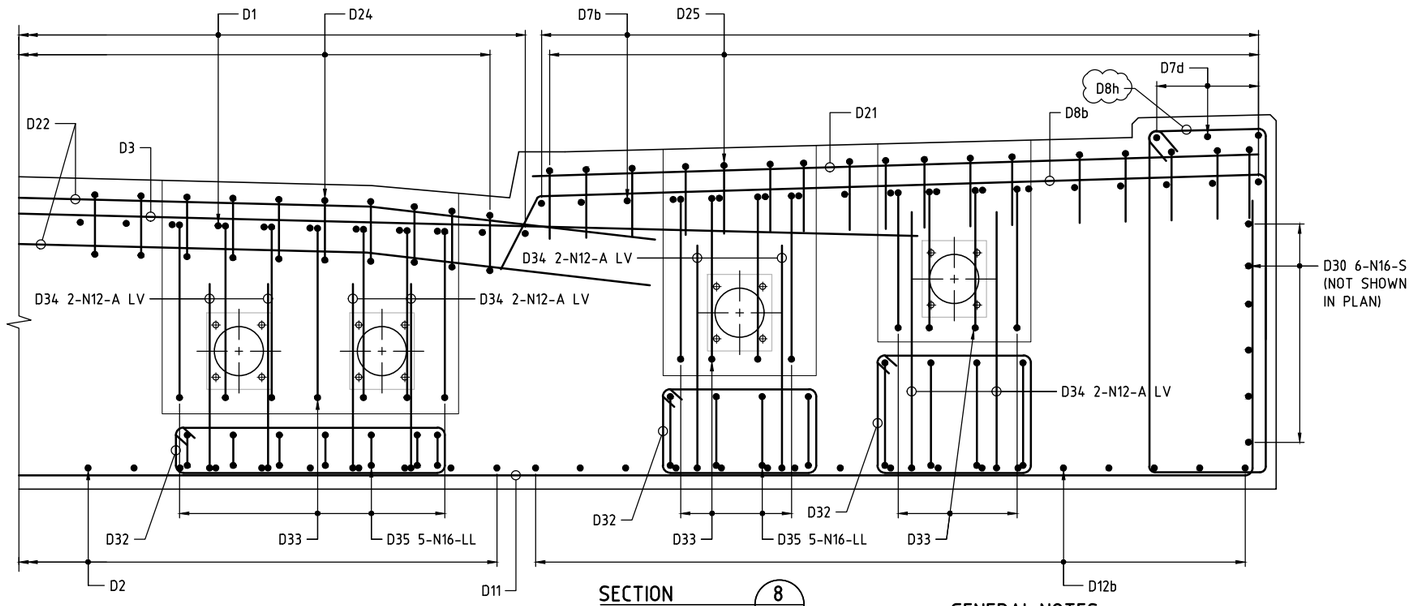

SECTION 8 / -
SCALE 1:10

GENERAL NOTES

FOR OTHER GENERAL NOTES RELATED TO THIS DRAWING, REFER TO DRG No 171.

These plans are referred to in certificate no. **16746** approved by:
Eric Hausfeld
Registered Certifier
Registration No: BDC 2416
Categories: Certifier – Subdivision
Certifier – Strata
Certifier – Stormwater
Certifier – Road & Drainage
Certifier – Hydraulic (stormwater)
Land Development Certificates
www.LDC.com.au

DRAWING FILE LOCATION / NAME: V:_Vault\Projects\3001\30013046\110_CADD\CAD\DWG\30013046-174.dwg
PLOT DATE: 13 Oct 2021 TIME: 23:45:54

EXTERNAL REFERENCE FILES	REV	DATE	AMENDMENT / REVISION DESCRIPTION	WVR No.	APPROVAL
	01	10.07.2021	ISSUED FOR TENDER	001	JD
	02	20.08.2021	ISSUED FOR TENDER	001	JD
	03	14.10.2021	ISSUED FOR TENDER	002	JD

TITLE	NAME
DRAFTER	T.SABAPATHI
DRAFTING CHECK	V.S.KODURU
DESIGNER	V.S.KODURU
DESIGN CHECK	V.BALAKRISHNAN
PROJECT MANAGER	J.DICKERSON
PROJECT DIRECTOR	K.LUU

SCALES AT A1 SIZE DRAWING: 0 100 200 300 400 500mm; 100 50; 1:10

DESIGNER: SMEC
Member of the Surbana Jurong Group
© ABN 47 065 475 149
LEVEL 5, 20 BERRY STREET
NORTH SYDNEY NSW 2060
SMEC PROJECT No 30013046

CLIENT: FRASERS PROPERTY

PROJECT TITLE: SHRIMPTON CREEK BRIDGE

DECK REINFORCEMENT
SHEET D

SCALE	PHASE	PROJECT / DRAWING No.	REVISION
AS NOTED	TENDER	30013046-174	03

150 mm ON ORIGINAL
A1
X_30013046_SMEC_A1

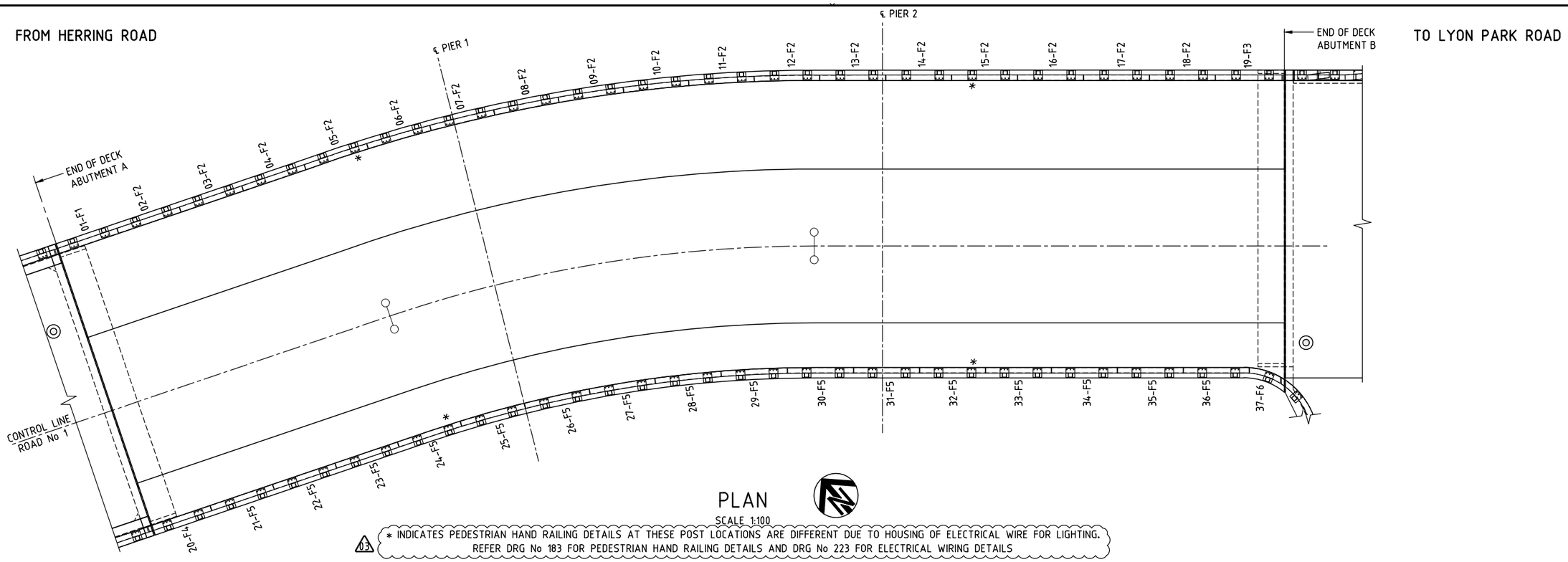

PLAN

SCALE 1:100

03 * INDICATES PEDESTRIAN HAND RAILING DETAILS AT THESE POST LOCATIONS ARE DIFFERENT DUE TO HOUSING OF ELECTRICAL WIRE FOR LIGHTING. REFER DRG No 183 FOR PEDESTRIAN HAND RAILING DETAILS AND DRG No 223 FOR ELECTRICAL WIRING DETAILS

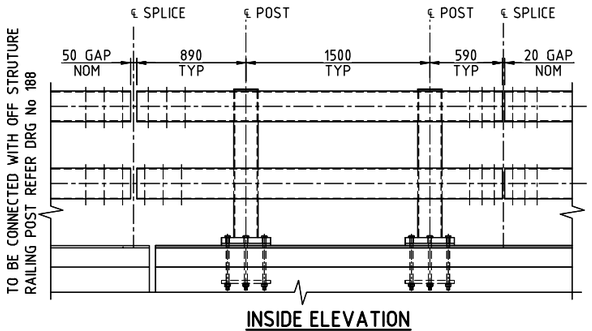

INSIDE ELEVATION PANEL F1 (F4)

SCALE 1:25

(CYCLIST/PEDESTRIAN RAILS NOT SHOWN)

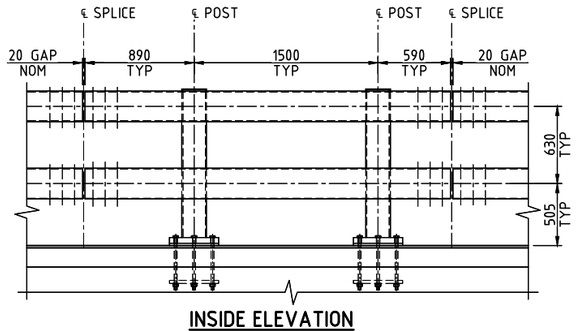

INSIDE ELEVATION PANEL F2 (F5 SIMILAR)

SCALE 1:25

(CYCLIST/PEDESTRIAN RAILS NOT SHOWN)

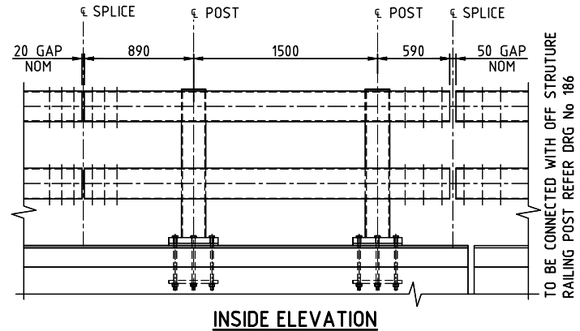

INSIDE ELEVATION PANEL F3

SCALE 1:25

(CYCLIST/PEDESTRIAN RAILS NOT SHOWN)

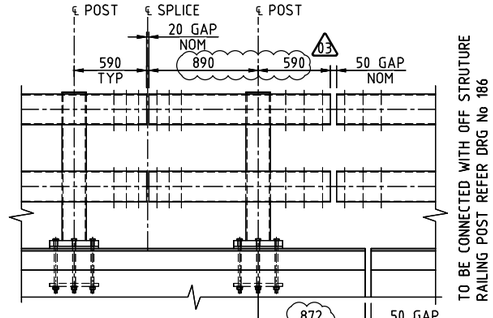

INSIDE ELEVATION PANEL F6

SCALE 1:25

(CYCLIST/PEDESTRIAN RAILS NOT SHOWN)

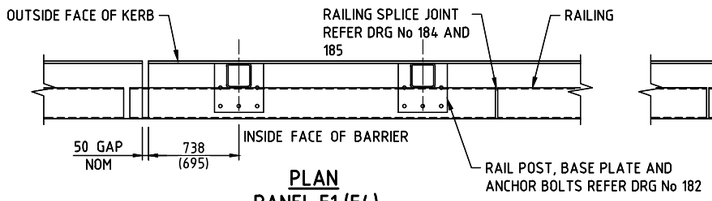

PLAN PANEL F1 (F4)

SCALE 1:25

(F1-1 No REQUIRED)

(F4-1 No REQUIRED)

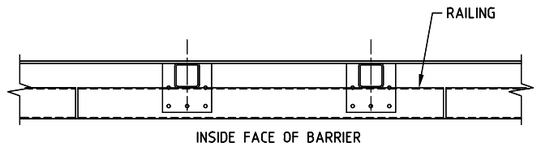

PLAN PANEL F2 (F5 SIMILAR)

SCALE 1:25

(F2-17 No REQUIRED)

(F5-16 No REQUIRED)

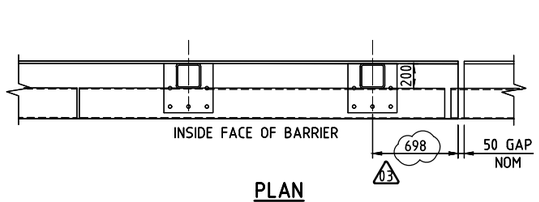

PLAN PANEL F3

SCALE 1:25

(F3-1 No REQUIRED)

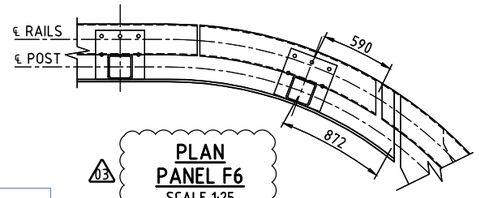

03 PLAN PANEL F6

SCALE 1:25

(F6-1 No REQUIRED)

These plans are referred to in certificate no. **16746** approved by:

Eric Hausfeld
Registered Certifier

Registration No: BDC 2416

Categories: Certifier – Subdivision; Certifier – Strata; Certifier – Stormwater; Certifier – Road & Drainage; Certifier – Hydraulic (stormwater)

Land Development Certificates
www.LDC.com.au

GENERAL NOTES

FOR GENERAL NOTES RELATED TO THIS SHEET, REFER DRG No 182.

03 ELEVATIONS DRAWN ARE ALONG THE LENGTH.

150 mm ON ORIGINAL

A1

DRAWING FILE LOCATION / NAME: V:_Vault\Projects\3001\30013046\110_CADD\CAD\DWG\30013046-181.dwg

PLOT DATE: 14 Oct 2021 TIME: 00:24:53

EXTERNAL REFERENCE FILES: X_30013046_SMEC_A1; X_DES_MAIN; X_BRG_PLAN

REV	DATE	AMENDMENT / REVISION DESCRIPTION	WVR No.	APPROVAL
01	10.07.2021	ISSUED FOR TENDER	001	JD
02	20.08.2021	ISSUED FOR TENDER	001	JD
03	14.10.2021	ISSUED FOR TENDER	002	JD

TITLE	NAME
DRAFTER	T.SABAPATHI
DRAFTING CHECK	V.S.KODURU
DESIGNER	V.S.KODURU
DESIGN CHECK	V.BALAKRISHNAN
PROJECT MANAGER	J.DICKERSON
PROJECT DIRECTOR	K.LUU

SCALES AT A1 SIZE DRAWING: 0 1000 2000 3000 4000 5000mm; 1000 500; 1:100

DESIGNER: SMEC
Member of the Surbana Jurong Group
© ABN 47 065 475 149
LEVEL 5, 20 BERRY STREET
NORTH SYDNEY NSW 2060
SMEC PROJECT No 30013046

CLIENT: FRASERS PROPERTY

PROJECT TITLE: SHRIMPTON CREEK BRIDGE

ON STRUCTURE BARRIER DETAILS
SHEET A

SCALE	PHASE	PROJECT / DRAWING No.	REVISION
AS NOTED	TENDER	30013046-181	03

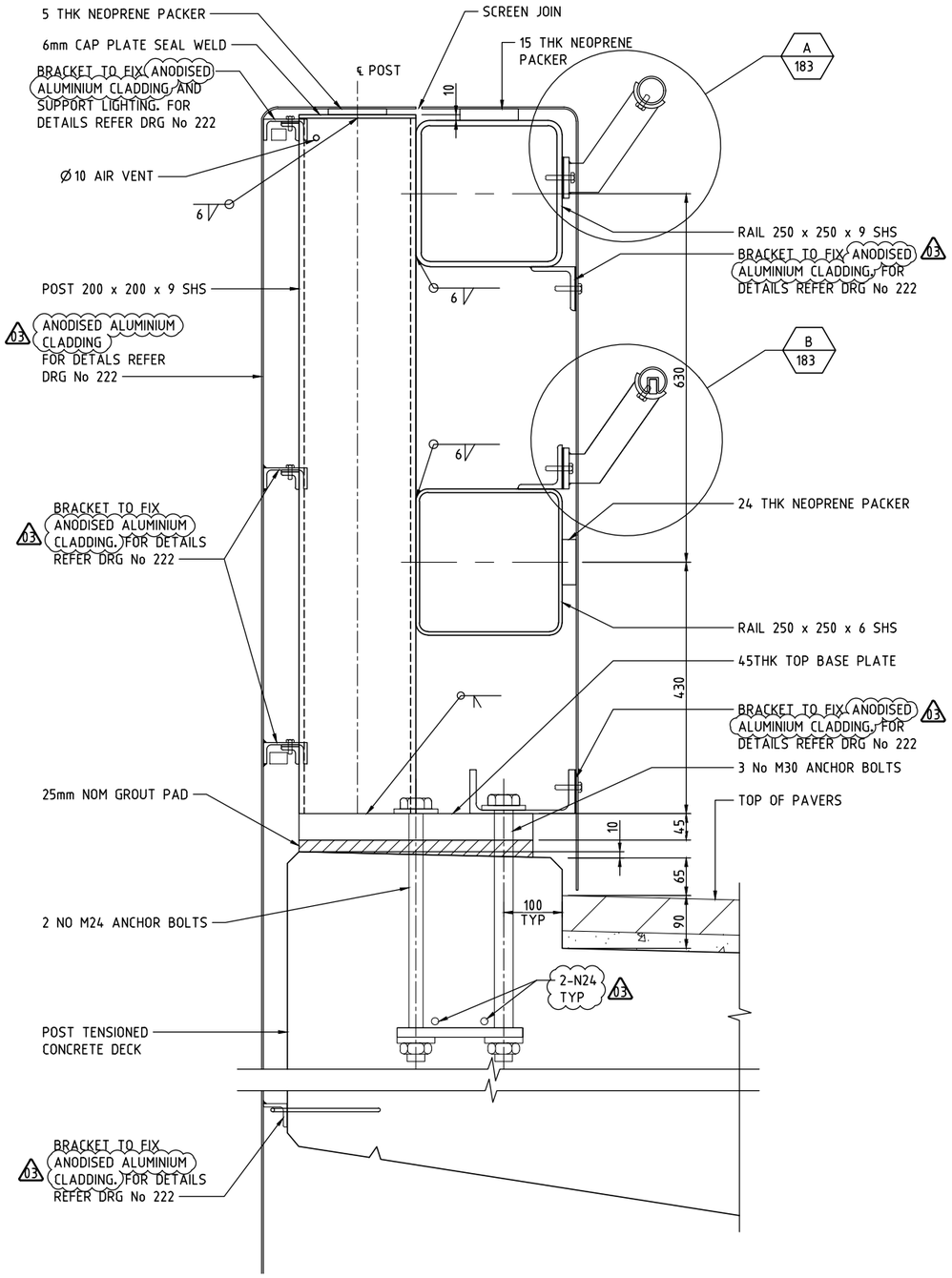

TYPICAL BARRIER SECTION

SCALE 1:5

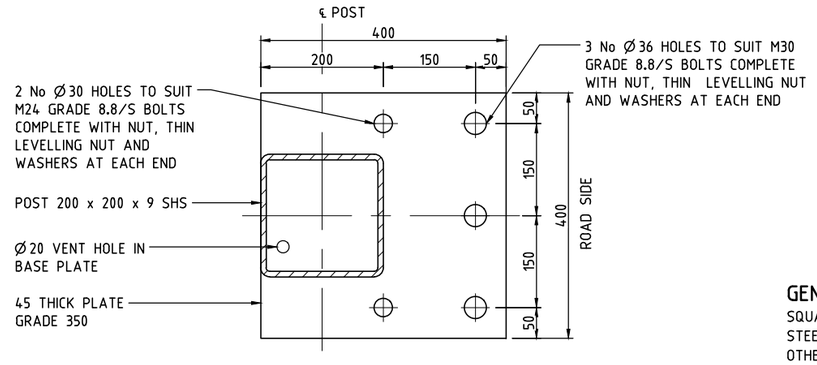

TOP OF BASE PLATE

SCALE 1:5

(PFC NOT SHOWN FOR CLARITY)

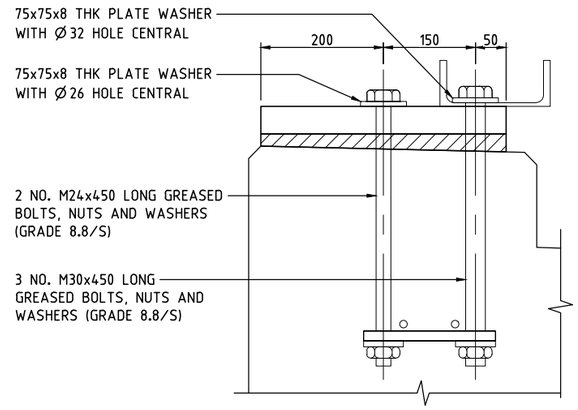

RAIL POST ANCHOR BOLTS DETAIL

SCALE 1:5

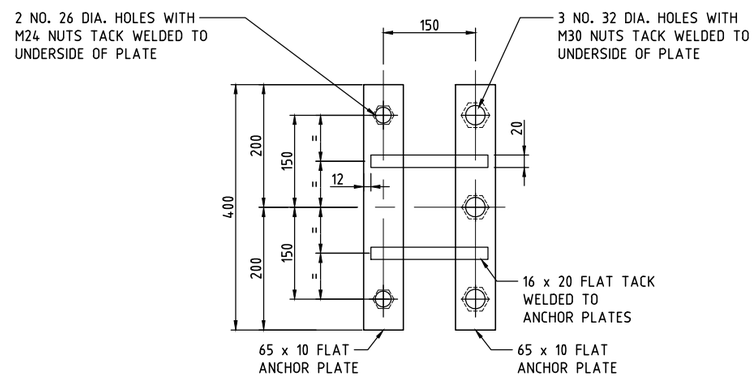

RAIL POST ANCHOR PLATE ASSEMBLY

SCALE 1:5

GENERAL NOTES

SQUARE HOLLOW SECTIONS SHALL BE GRADE C350LO TO AS 1163.
STEEL PLATE SHALL BE GRADE 350 TO AS/NZS3678 UNLESS NOTED OTHERWISE.
BOLTING CATEGORY SHALL BE 8.8/S IN ACCORDANCE WITH AS 5100.6.
WELDING SYMBOLS COMPLY WITH AS 1101.3.
ALL WELDING SHALL CONFORM TO THE REQUIREMENTS OF AS/NZS 1554.1.
THE WELD CATEGORY SHALL BE SP IN ACCORDANCE WITH AS/NZS 1554.1.
ALL EXPOSED BUTT WELDS SHALL BE GROUND FLUSH.
EDGES TO BE PROTECTIVE TREATED SHALL BE ROUNDED TO A RADIUS OF 1.5mm UNLESS SPECIFIED OTHERWISE.
ALL STEEL COMPONENTS SHALL BE HOT DIP GALVANISED AFTER FABRICATION.
BOLTS, NUTS AND WASHERS SHALL BE HOT DIP GALVANISED IN ACCORDANCE WITH AS 1214.
NUTS SHALL BE TAPPED TO SUIT GALVANISED THREADS AND OILED FOR PROTECTION.
THE LONGITUDINAL SEAM IN SHS MEMBERS SHALL BE ON THE UNDERSIDE OF THE RAILS.
RAILING POSTS SHALL BE ALIGNED PERPENDICULAR TO THE DECK.
RAILS SHALL FOLLOW LONGITUDINAL SLOPE OF BRIDGE.
HIGH-STRENGTH STEEL CUP HEAD BOLTS SHALL BE PROPERTY CLASS 8.8 WITH MATERIAL AND MECHANICAL PROPERTIES IN ACCORDANCE WITH AS/NZS 1252.
DIMENSION AND SHAPE FOR CUP HEAD BOLTS SHALL BE IN ACCORDANCE WITH AS/NZS 1390.
PRIOR TO INSTALLATION THE SOFFIT OF THE POST BASE PLATES AND THE SURFACE OF THE SLOTTED HOLES SHALL BE COATED WITH A TWO PACK EPOXY PAINT WITH A MINIMUM DRY FILM THICKNESS OFF 100mm.
PTFE SPACER SHALL BE 100% VIRGIN POLYTETRAFLUOROETHYLENE CONFORMING TO ISO 1300-1 GRADE 1 AND SHALL BE UNFILLED, NOT LUBRICATED AND NOT DIMPLED.
CONNECTORS TO BE TRIAL FITTED BEFORE GALVANISING TO ENSURE LOOSE FIT.
SEAM WELD INSIDE SHS TO BE GROUND OFF FOR 250mm MINIMUM FROM END OF RAIL.
PREPARE SHOP DRAWINGS AND SUBMIT COPIES OF EACH FOR ENGINEER'S REVIEW OF GENERAL COMPLIANCE WITH DESIGN CONCEPT. SHOP DRAWINGS TO SHOW RELEVANT DETAILS OF EACH ASSEMBLY, COMPONENT AND CONNECTION, TOGETHER WITH INFORMATION RELATIVE TO FABRICATION AND ERECTION, INCLUDING IDENTIFICATION, STEEL TYPE AND GRADE, DIMENSIONS OF ITEMS, LOCATION, TYPE AND SIZE OF WELDS OR BOLTS, WELD CATEGORIES AND BOLTING CATEGORIES, SURFACE PREPARATION METHODS AND COATING SYSTEM, VENT/DRAIN HOLES FOR HOP DIP GALVANISING, PROPOSED JOINTS IN STEEL MEMBERS, ETC.
THE GROUT USED TO CONSTRUCT MORTAR PADS AND FILL FORMED RECESSES SHALL BE SHRINKAGE COMPENSATED HIGH FLOW CEMENTITIOUS GROUT. MINIMUM COMPRESSIVE STRENGTH OF GROUT SHALL BE 40MPa.

* DENOTES NOMINAL DIMENSION ONLY. AFTER GALVANISING, HOLES SHALL PROVIDE TAP-IN FIT FOR M24 GALVANISED BOLTS.
† DENOTES APPROXIMATE DIMENSION. RAIL CONNECTOR SHALL BE SLIDING FIT INSIDE THE RAILS AFTER GALVANISING AND FITTING OF PINS.

FOR NOTES RELATED TO STAINLESS STEEL & ALUMINIUM REFER DRG No 223.

These plans are referred to in certificate no. 16746 approved by:
Eric Hausfeld
Registered Certifier
Registration No: BDC 2416
Categories: Certifier – Subdivision, Certifier – Strata, Certifier – Stormwater, Certifier – Road & Drainage, Certifier – Hydraulic (stormwater)
Land Development Certificates
www.LDC.com.au

DRAWING FILE LOCATION / NAME	PLOT DATE	TIME
V:_Vault\Projects\3001\30013046\110_CADD\CAD\DWG\30013046-182.dwg	14 Oct 2021	00:24:39

EXTERNAL REFERENCE FILES: X_30013046_SMEC_A1 X_BRG_SEC

REV	DATE	AMENDMENT / REVISION DESCRIPTION	WVR No.	APPROVAL
01	10.07.2021	ISSUED FOR TENDER	001	JD
02	20.08.2021	ISSUED FOR TENDER	001	JD
03	14.10.2021	ISSUED FOR TENDER	002	JD

TITLE	NAME
DRAFTER	T.SABAPATHI
DRAFTING CHECK	V.S.KODURU
DESIGNER	V.S.KODURU
DESIGN CHECK	V.BALAKRISHNAN
PROJECT MANAGER	J.DICKERSON
PROJECT DIRECTOR	K.LUU

SCALES AT A1 SIZE DRAWING: 0 100 200mm; 50 25; 1:5

DESIGNER: SMEC
Member of the Surbana Jurong Group
© ABN 47 065 475 149
LEVEL 5, 20 BERRY STREET
NORTH SYDNEY NSW 2060
SMEC PROJECT No 30013046

CLIENT: FRASERS PROPERTY

PROJECT TITLE: SHRIMPTON CREEK BRIDGE

ON STRUCTURE BARRIER DETAILS
SHEET B

SCALE	PHASE	PROJECT / DRAWING No.	REVISION
AS NOTED	TENDER	30013046-182	03

150 mm ON ORIGINAL
A1

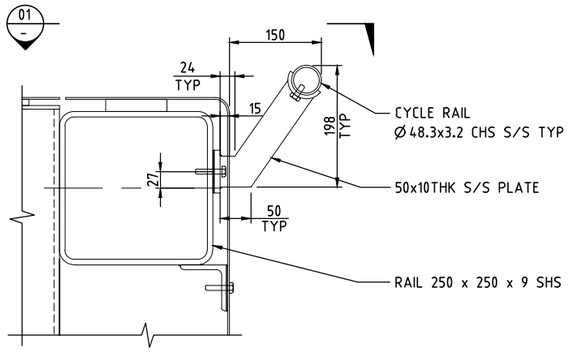

DETAIL A 182
SCALE 1:5

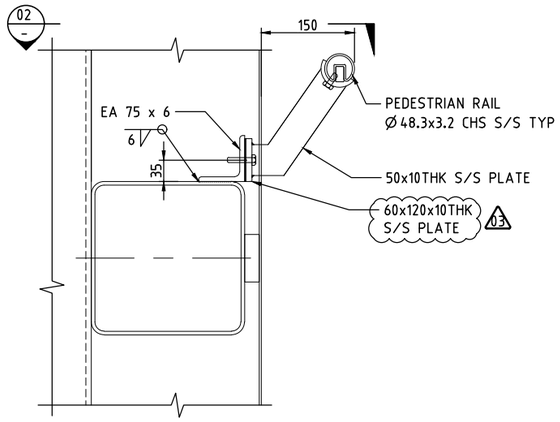

DETAIL B 182
SCALE 1:5

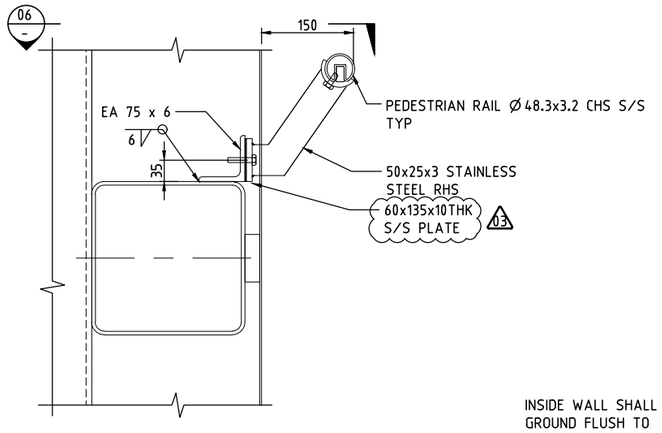

PEDESTRIAN HAND RAIL DETAILS FOR
POST INDICATED WITH * IN DWG NO 181
SCALE 1:5

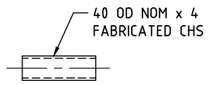

RAIL CONNECTOR
SCALE 1:5

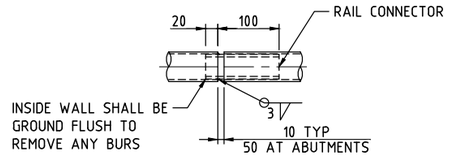

RAIL CONNECTOR ASSEMBLY
SCALE 1:5

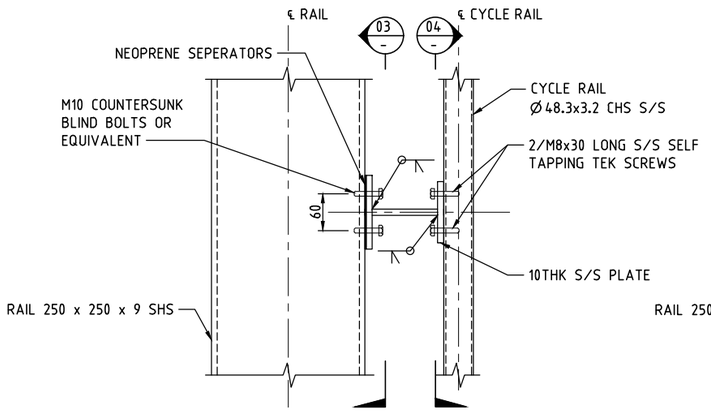

VIEW 1
SCALE 1:5

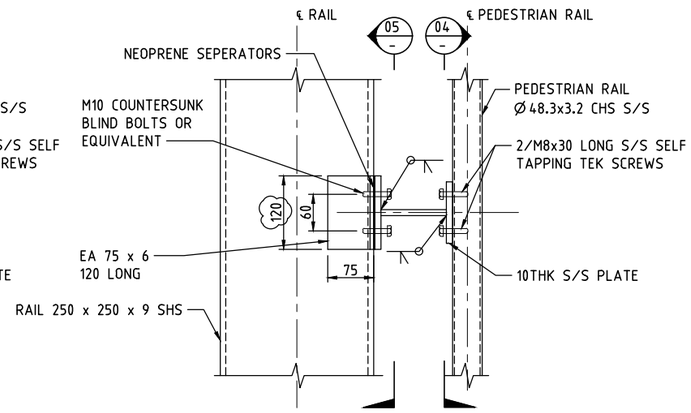

VIEW 2
SCALE 1:5

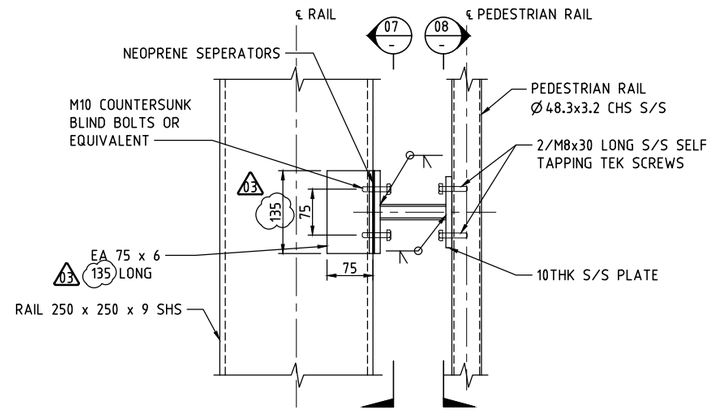

VIEW 6
SCALE 1:5

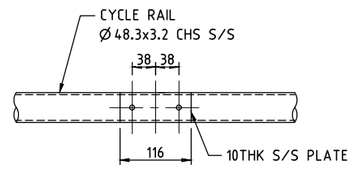

SECTION 8
SCALE 1:5

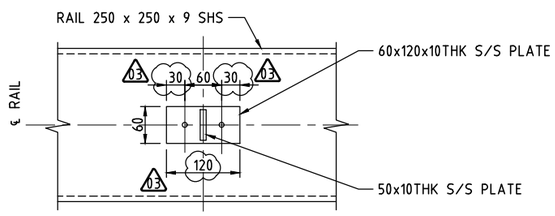

SECTION 3
SCALE 1:5

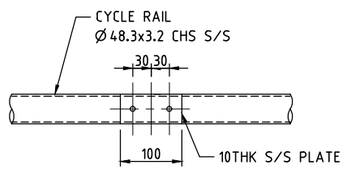

SECTION 4
SCALE 1:5

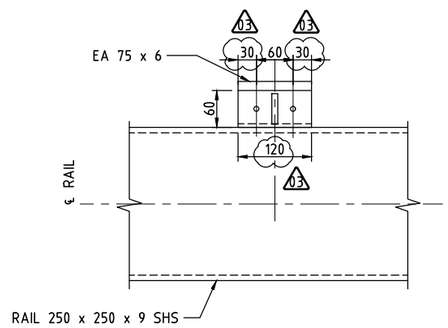

SECTION 5
SCALE 1:5

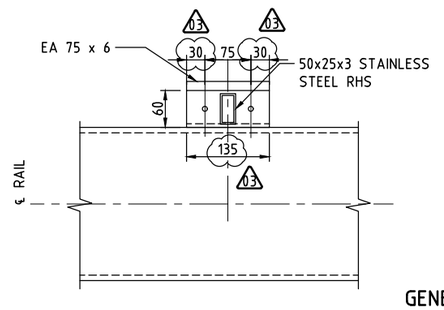

SECTION 7
SCALE 1:5

These plans are referred to in certificate no. **16746** approved by:
Eric Hausfeld
Registered Certifier
Registration No: BDC 2416
Categories: Certifier – Subdivision
Certifier – Strata
Certifier – Stormwater
Certifier – Road & Drainage
Certifier – Hydraulic (stormwater)
Land Development Certificates
www.LDC.com.au

GENERAL NOTES

FOR GENERAL NOTES RELATED TO THIS DRAWING, REFER DRG No 182.
S/S INDICATES STAINLESS STEEL.
CONTRACTOR TO PROPOSE THE PEDESTRAIN RAIL SPLICING DETAILS.

150 mm ON ORIGINAL
A1

DRAWING FILE LOCATION / NAME
V:_Vault\Projects\3001\30013046\110_CADD\CAD\DWG\30013046-183.dwg

PLOT DATE 14 Oct 2021 TIME 00:24:29

EXTERNAL REFERENCE FILES
X_30013046_SMEC_A1
X_BRG_SEC

REV	DATE	AMENDMENT / REVISION DESCRIPTION	WVR No.	APPROVAL
01	10.07.2021	ISSUED FOR TENDER	001	JD
02	20.08.2021	ISSUED FOR TENDER	001	JD
03	14.10.2021	ISSUED FOR TENDER	002	JD

TITLE	NAME
DRAFTER	T.SABAPATHI
DRAFTING CHECK	V.S.KODURU
DESIGNER	V.S.KODURU
DESIGN CHECK	V.BALAKRISHNAN
PROJECT MANAGER	J.DICKERSON
PROJECT DIRECTOR	K.LUU

SCALES AT A1 SIZE DRAWING
0 100 200mm
50 25 1:5

DESIGNER
SMEC
Member of the Surbana Jurong Group
© ABN 47 065 475 149
LEVEL 5, 20 BERRY STREET
NORTH SYDNEY NSW 2060
SMEC PROJECT No 30013046

CLIENT
FRASERS PROPERTY

PROJECT TITLE
SHRIMPTON CREEK BRIDGE

ON STRUCTURE BARRIER DETAILS
SHEET C

SCALE	PHASE	PROJECT / DRAWING No.	REVISION
AS NOTED	TENDER	30013046-183	03

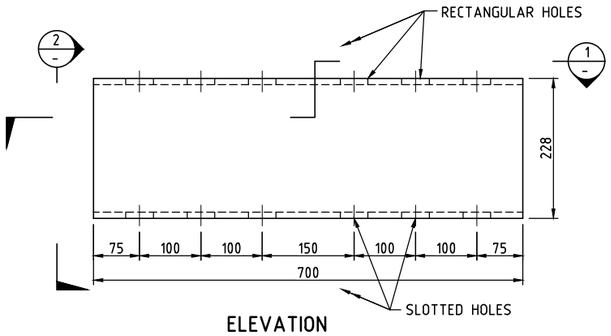

ELEVATION
SCALE 1:5

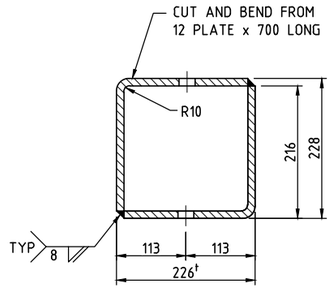

VIEW 2
SCALE 1:5

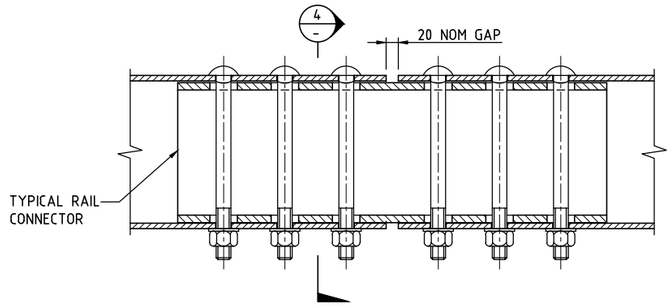

SECTION 3
SCALE 1:5

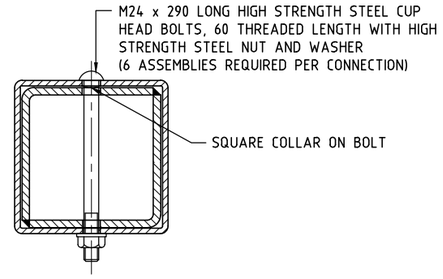

SECTION 4
SCALE 1:5

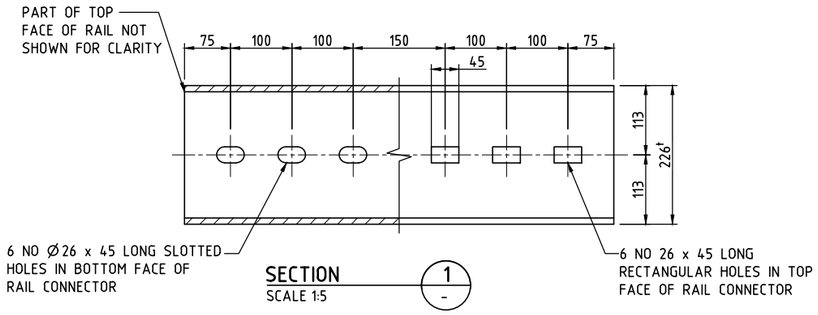

SECTION 1
SCALE 1:5

TYPICAL RAIL CONNECTOR

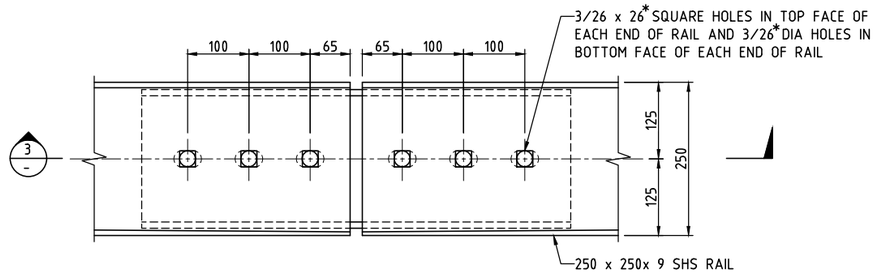

PLAN
ASSEMBLY OF TYPICAL RAIL CONNECTION
SCALE 1:5

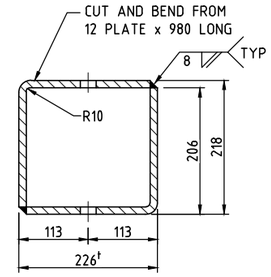

VIEW 5
SCALE 1:5

DETAIL AT TYPICAL CONNECTION

(FOR 250 x 250 x 9 SHS RAIL)

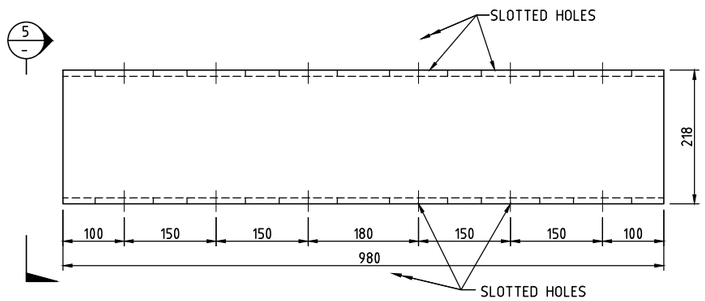

ELEVATION
SCALE 1:5

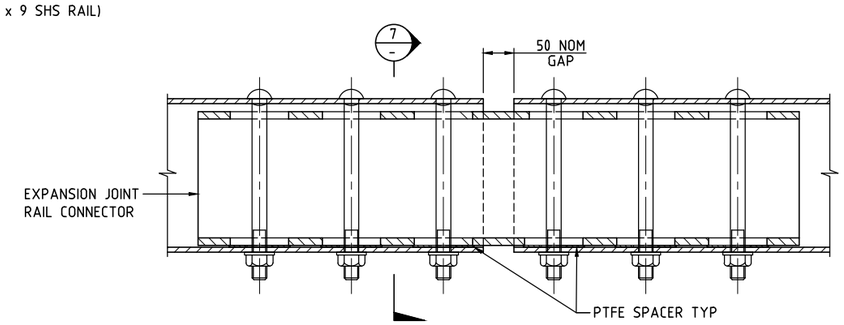

SECTION 6
SCALE 1:5

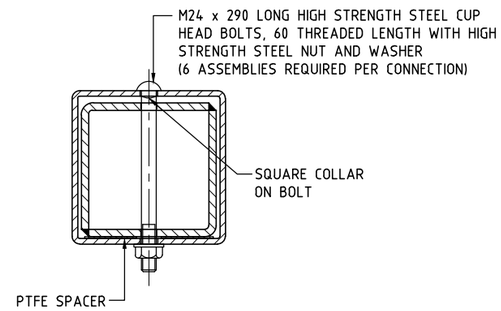

SECTION 7
SCALE 1:5

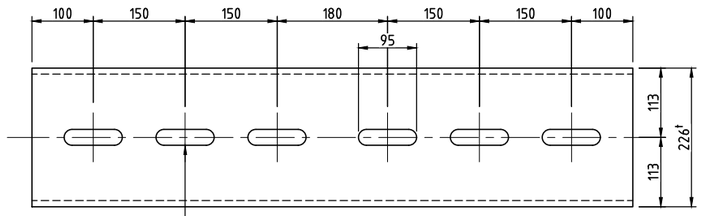

PLAN
EXPANSION JOINT RAIL CONNECTOR
SCALE 1:5

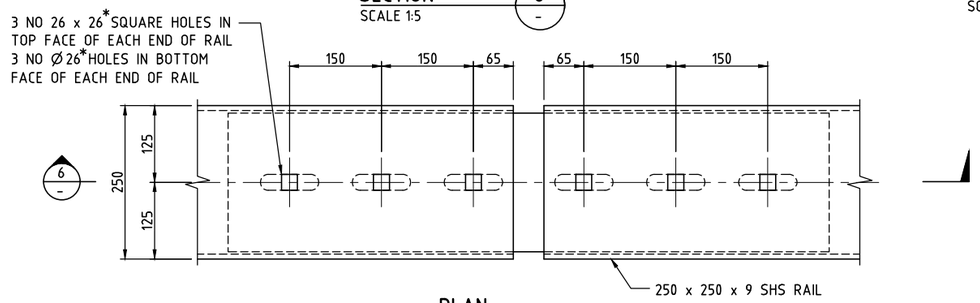

PLAN
ASSEMBLY AT EXPANSION JOINT RAIL CONNECTION
SCALE 1:5

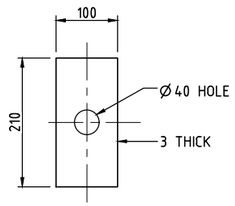

PTFE SPACER
SCALE 1:5

DETAIL AT EXPANSION JOINT CONNECTION

(FOR 250 x 250 x 9 SHS RAIL)

These plans are referred to in certificate no. **16746** approved by:
Eric Hausfeld
Registered Certifier
Registration No: BDC 2416
Categories: Certifier – Subdivision, Certifier – Strata, Certifier – Stormwater, Certifier – Road & Drainage, Certifier – Hydraulic (stormwater)
Land Development Certificates
www.LDC.com.au

GENERAL NOTES

FOR GENERAL NOTES RELATED TO THIS DRAWING, REFER DRG No 182.

DRAWING FILE LOCATION / NAME	PLOT DATE	TIME
V:_Vault\Projects\3001\30013046\110_CADD\CAD\DWG\30013046-184.dwg	14 Oct 2021	00:22:47

EXTERNAL REFERENCE FILES: X_30013046_SMEC_A1

REV	DATE	AMENDMENT / REVISION DESCRIPTION	WVR No.	APPROVAL
01	10.07.2021	ISSUED FOR TENDER	001	JD
02	20.08.2021	ISSUED FOR TENDER	001	JD

TITLE	NAME
DRAFTER	T.SABAPATHI
DRAFTING CHECK	V.S.KODURU
DESIGNER	V.S.KODURU
DESIGN CHECK	V.BALAKRISHNAN
PROJECT MANAGER	J.DICKERSON
PROJECT DIRECTOR	K.LUU

SCALES AT A1 SIZE DRAWING: 0 100 200mm; 50 25; 1:5

DESIGNER: SMEC
Member of the Surbana Jurong Group
© ABN 47 065 475 149
LEVEL 5, 20 BERRY STREET
NORTH SYDNEY NSW 2060
SMEC PROJECT No 30013046

CLIENT: FRASERS PROPERTY

PROJECT TITLE: SHRIMPTON CREEK BRIDGE
ON STRUCTURE BARRIER DETAILS
SHEET D

SCALE	PHASE	PROJECT / DRAWING No.	REVISION
AS NOTED	TENDER	30013046-184	02

150 mm ON ORIGINAL
A1

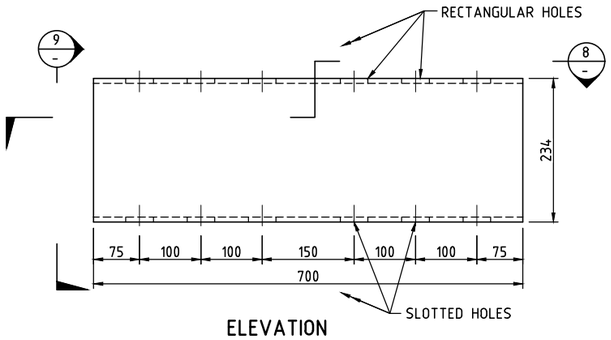

ELEVATION
SCALE 1:5

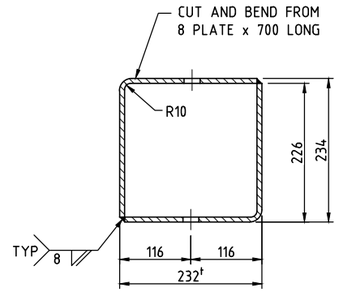

VIEW 9
SCALE 1:5

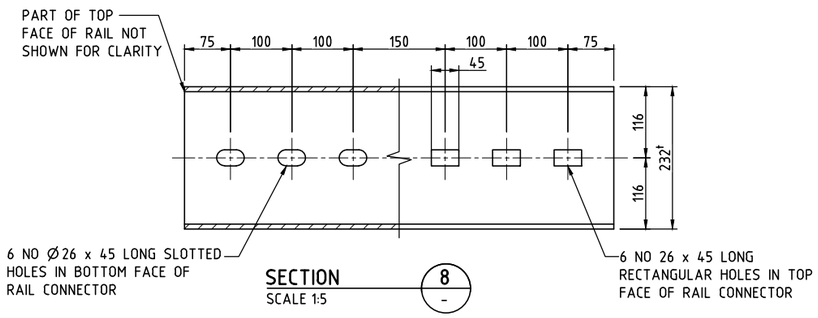

SECTION 8
SCALE 1:5

TYPICAL RAIL CONNECTOR

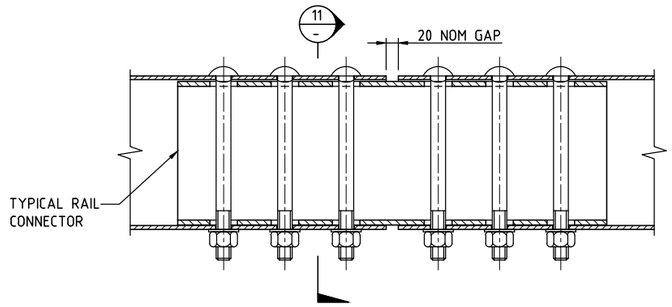

SECTION 10
SCALE 1:5

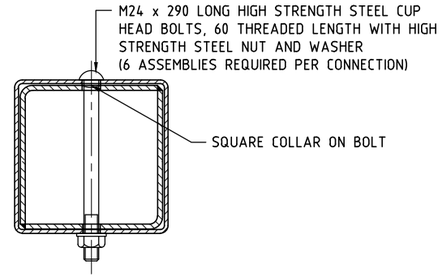

SECTION 11
SCALE 1:5

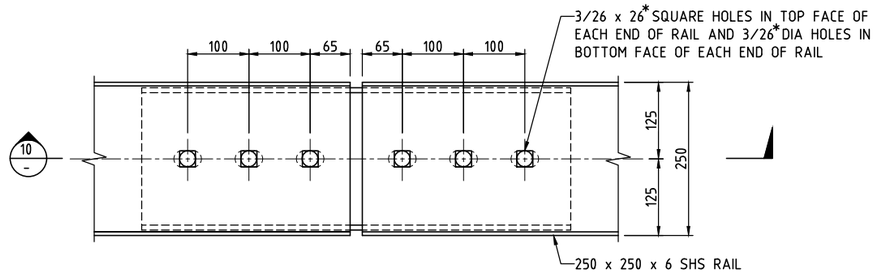

PLAN
ASSEMBLY OF TYPICAL RAIL CONNECTION
SCALE 1:5

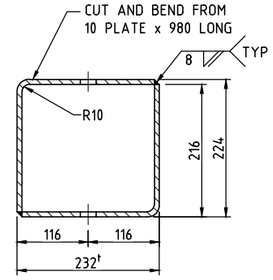

VIEW 12
SCALE 1:5

DETAIL AT TYPICAL CONNECTION

(FOR 250 x 250 x 6 SHS RAIL)

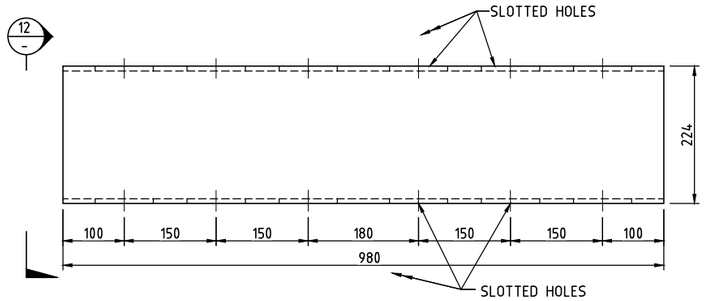

ELEVATION
SCALE 1:5

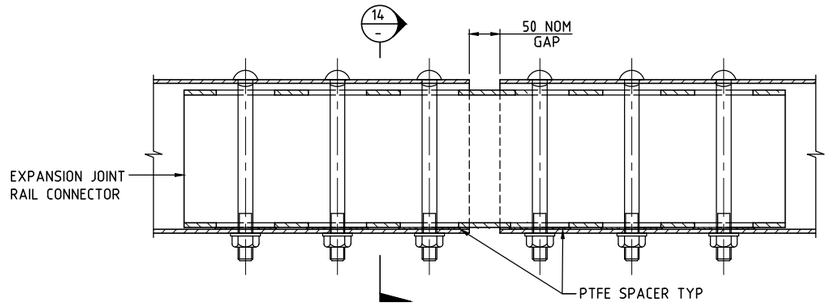

SECTION 13
SCALE 1:5

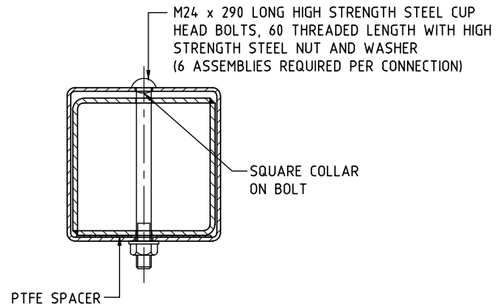

SECTION 14
SCALE 1:5

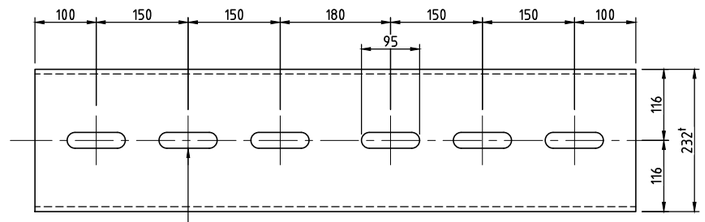

PLAN
EXPANSION JOINT RAIL CONNECTOR
SCALE 1:5

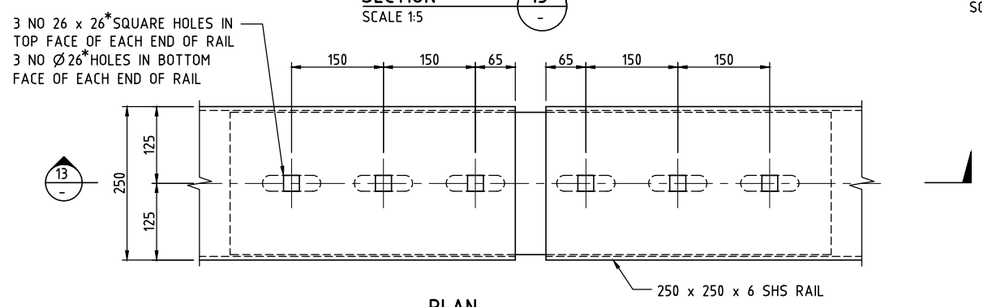

PLAN
ASSEMBLY AT EXPANSION JOINT RAIL CONNECTION
SCALE 1:5

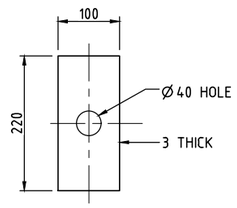

PTFE SPACER
SCALE 1:5

DETAIL AT EXPANSION JOINT CONNECTION

(FOR 250 x 250 x 6 SHS RAIL)

These plans are referred to in certificate no. **16746** approved by:
Eric Hausfeld
Registered Certifier
Registration No: BDC 2416
Categories: Certifier – Subdivision, Certifier – Strata, Certifier – Stormwater, Certifier – Road & Drainage, Certifier – Hydraulic (stormwater)
Land Development Certificates
www.LDC.com.au

GENERAL NOTES

FOR GENERAL NOTES RELATED TO THIS DRAWING, REFER DRG No 182.

DRAWING FILE LOCATION / NAME	PLOT DATE	TIME
V:_Vault\Projects\3001\30013046\110_CADD\CAD\DWG\30013046-185.dwg	14 Oct 2021	00:22:35

EXTERNAL REFERENCE FILES	REV	DATE	AMENDMENT / REVISION DESCRIPTION	WVR No.	APPROVAL
	01	10.07.2021	ISSUED FOR TENDER	001	JD
	02	20.08.2021	ISSUED FOR TENDER	001	JD

TITLE	NAME
DRAFTER	T.SABAPATHI
DRAFTING CHECK	V.S.KODURU
DESIGNER	V.S.KODURU
DESIGN CHECK	V.BALAKRISHNAN
PROJECT MANAGER	J.DICKERSON
PROJECT DIRECTOR	K.LUU

SCALES AT A1 SIZE DRAWING: 0 100 200mm; 50 25; 1:5

DESIGNER: SMEC
Member of the Surbana Jurong Group
© ABN 47 065 475 149
LEVEL 5, 20 BERRY STREET
NORTH SYDNEY NSW 2060
SMEC PROJECT No 30013046

CLIENT: FRASERS PROPERTY

PROJECT TITLE: SHRIMPTON CREEK BRIDGE
ON STRUCTURE BARRIER DETAILS
SHEET E

SCALE	PHASE	PROJECT / DRAWING No.	REVISION
AS NOTED	TENDER	30013046-185	02

150 mm ON ORIGINAL
A1
X_30013046_SMEC_A1

FROM HERRING ROAD

TO LYON PARK ROAD

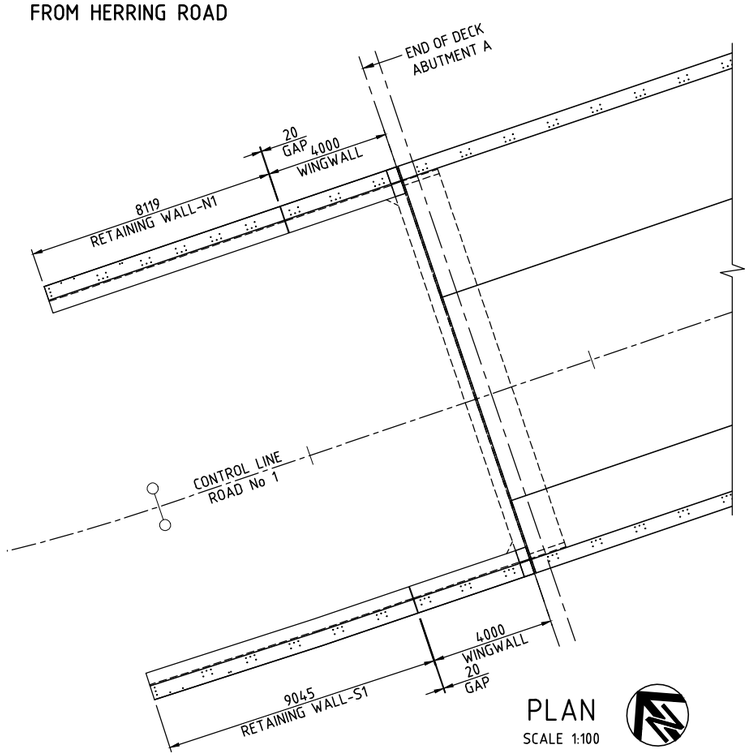

PLAN
SCALE 1:100

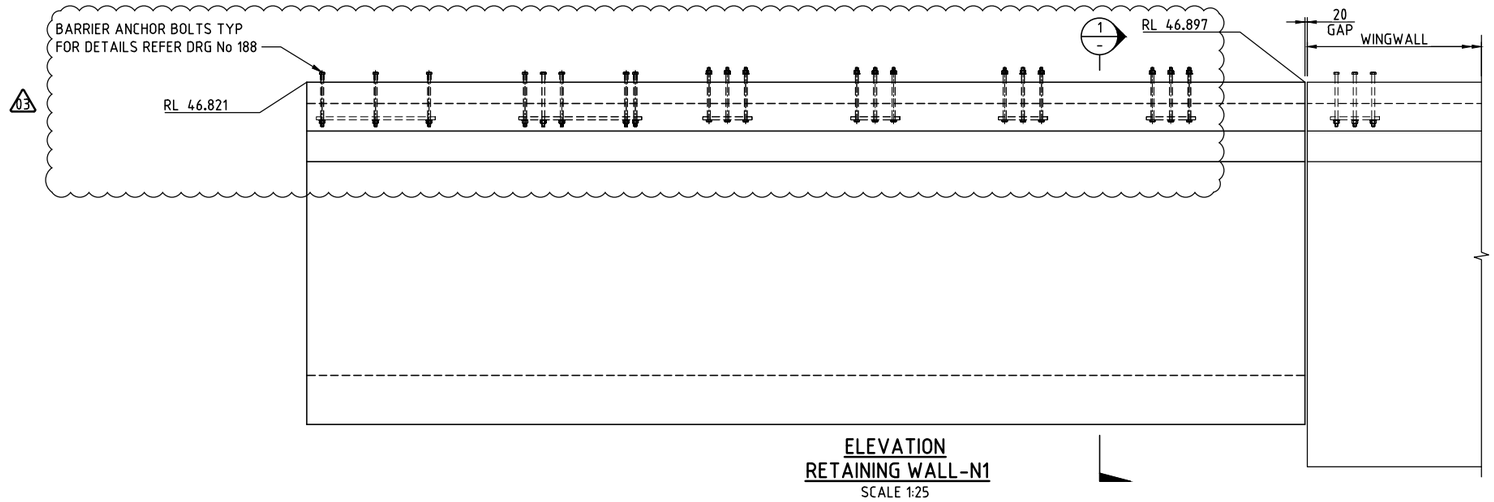

ELEVATION
RETAINING WALL-N1
SCALE 1:25

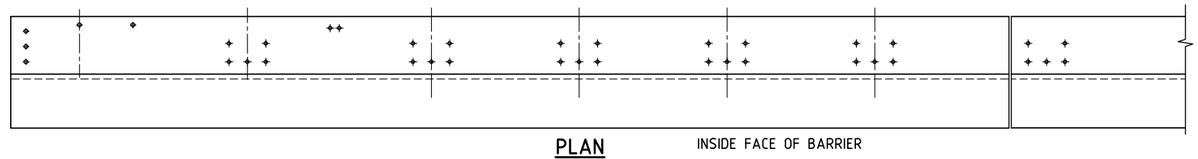

PLAN
RETAINING WALL-N1
SCALE 1:25

INSIDE FACE OF BARRIER

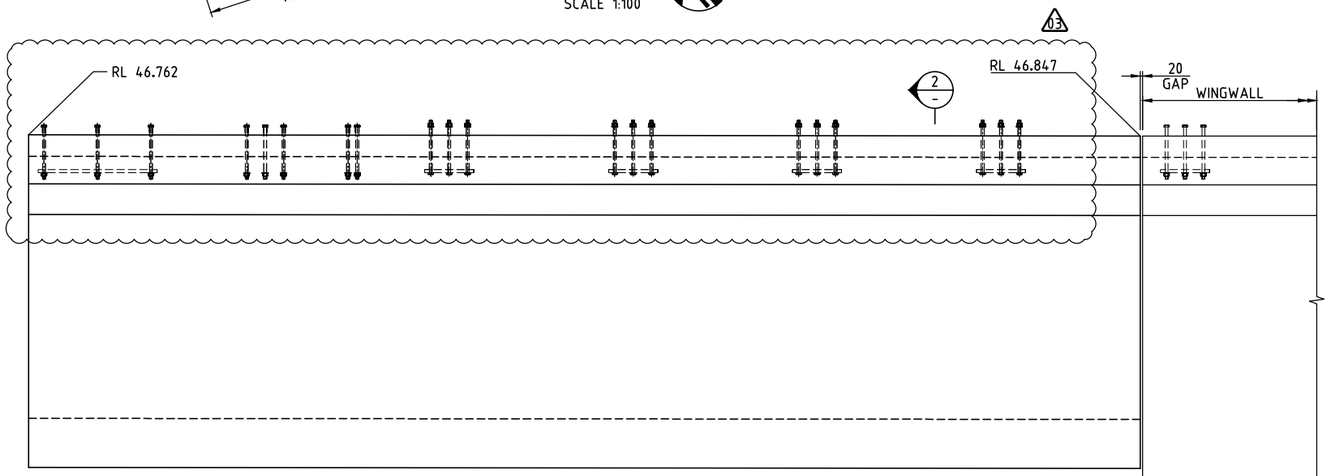

ELEVATION
RETAINING WALL-S1
SCALE 1:25

INSIDE FACE OF BARRIER

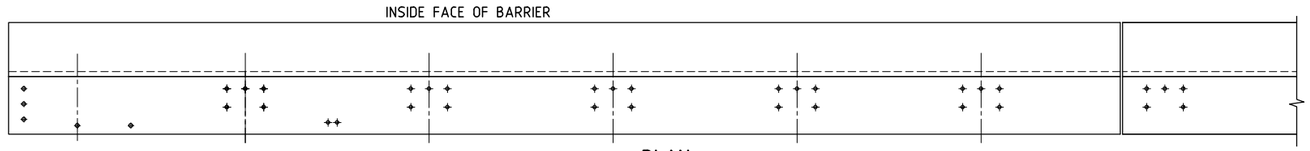

PLAN
RETAINING WALL-S1
SCALE 1:25

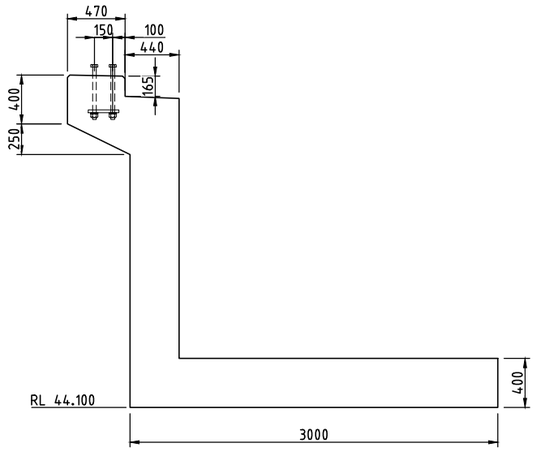

SECTION 1/- 2/-
SCALE 1:25

GENERAL NOTES

ALL DIMENSIONS ARE IN MILLIMETRES UNLESS NOTED OTHERWISE.
CONCRETE EXPOSURE CLASSIFICATION: B1.
MINIMUM 28 DAYS COMPRESSIVE STRENGTH OF CONCRETE SHALL BE 40 MPa.
MINIMUM 28 DAYS COMPRESSIVE STRENGTH OF MASS CONCRETE SHALL BE 20 MPa.
CONSTRUCTION JOINT ONLY AT THE LOCATIONS NOMINATED ON THE DRAWINGS.
EXPOSED CONCRETE SURFACE TO HAVE SMOOTH FINISH.

DURABILITY NOTES

MAXIMUM TOTAL BINDER CONTENT SHALL BE KEPT AT 430kg/m^3 WITH TYPE GB CEMENT WITH 65.5% GROUND GRANULAR BLAST-FURNACE SLAG.
USE 36mm THICK PLYWOOD FORMWORK OR PROVIDE INSULATION TO FORMWORK CONSTRUCTED WITH OTHER MATERIALS TO ACHIEVE AN OVERALL SURFACE CONDUCTANCE LESS THAN 3.0W/m^2 °C.
MAXIMUM CONCRETE PLACEMENT TEMPERATURE SHALL NOT EXCEED 27°C.
TOP SURFACE OF THE PIER SHALL BE COVERED WITH 20mm THICK POLYSTYRENE FOAM OR EQUIVALENT AFTER CASTING. THE INSULATION SHALL BE REMOVED AT THE SAME TIME AS THE FORMWORK.
FORMWORK SHALL BE REMOVED NOT EARLIER THAN 216 HOURS.
THERMOCOUPLES SHOULD BE LOCATED WITHIN THE CONCRETE MEMBER BEING CONSTRUCTED. (ONE AT CENTRE AND ONE BELOW SURFACE WITH THE LAST DIMENSION).

These plans are referred to in certificate no. **16746** approved by:
Eric Hausfeld
Registered Certifier
Registration No: BDC 2416
Categories: Certifier – Subdivision; Certifier – Strata; Certifier – Stormwater; Certifier – Road & Drainage; Certifier – Hydraulic (stormwater)
Land Development Certificates
www.LDC.com.au

DRAWING FILE LOCATION / NAME: V:_Vault\Projects\3001\30013046\110_CADD\CAD\DWG\30013046-186.dwg
PLOT DATE: 13 Oct 2021 TIME: 22:44:52

EXTERNAL REFERENCE FILES: X_30013046_SMEC_A1; X_DES_MAIN; X_BRG_PLAN

REV	DATE	AMENDMENT / REVISION DESCRIPTION	WVR No.	APPROVAL
01	10.07.2021	ISSUED FOR TENDER	001	JD
02	20.08.2021	ISSUED FOR TENDER	001	JD
03	14.10.2021	ISSUED FOR TENDER	002	JD

TITLE	NAME
DRAFTER	T.SABAPATHI
DRAFTING CHECK	V.S.KODURU
DESIGNER	V.S.KODURU
DESIGN CHECK	V.BALAKRISHNAN
PROJECT MANAGER	J.DICKERSON
PROJECT DIRECTOR	K.LUU

SCALES AT A1 SIZE DRAWING: 0 1000 2000 3000 4000 5000mm; 1000 500; 1:100

DESIGNER: SMEC
Member of the Surbana Jurong Group
© ABN 47 065 475 149
LEVEL 5, 20 BERRY STREET
NORTH SYDNEY NSW 2060
SMEC PROJECT No 30013046

CLIENT: FRASERS PROPERTY

PROJECT TITLE: SHRIMPTON CREEK BRIDGE
RETAINING WALL
CONCRETE DETAILS

SCALE	PHASE	PROJECT / DRAWING No.	REVISION
AS NOTED	TENDER	30013046-186	03

150 mm ON ORIGINAL
A1

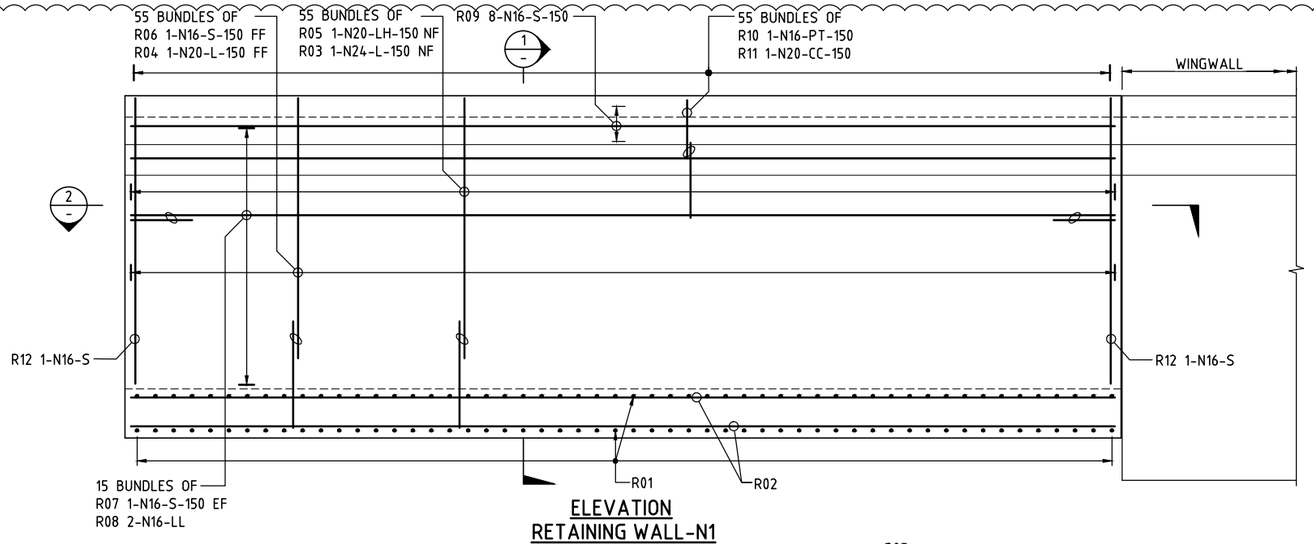

ELEVATION
RETAINING WALL-N1
SCALE 1:25

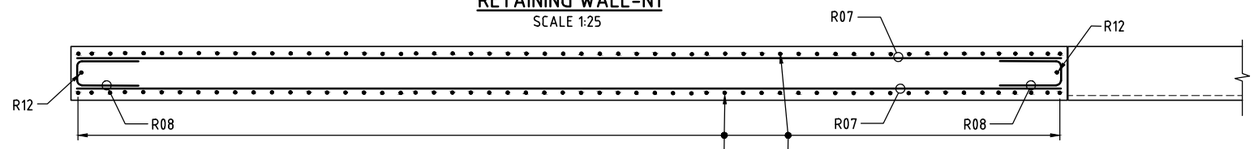

SECTION 2
SCALE 1:25

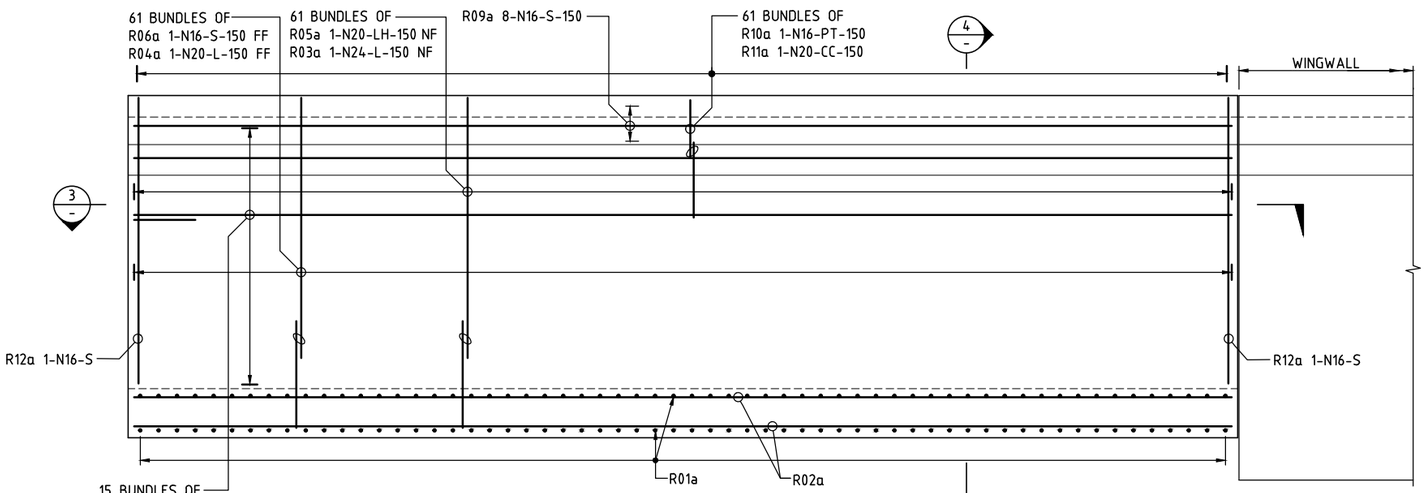

ELEVATION
RETAINING WALL-S1
SCALE 1:25

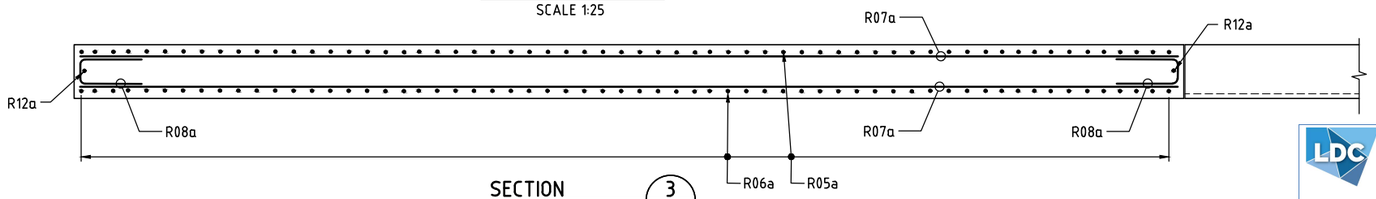

SECTION 3
SCALE 1:25

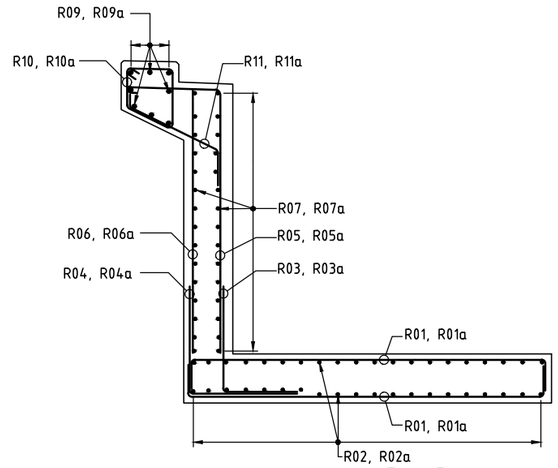

SECTION 1 - 4 - SIMILAR BUT OPPOSITE HAND
SCALE 1:25

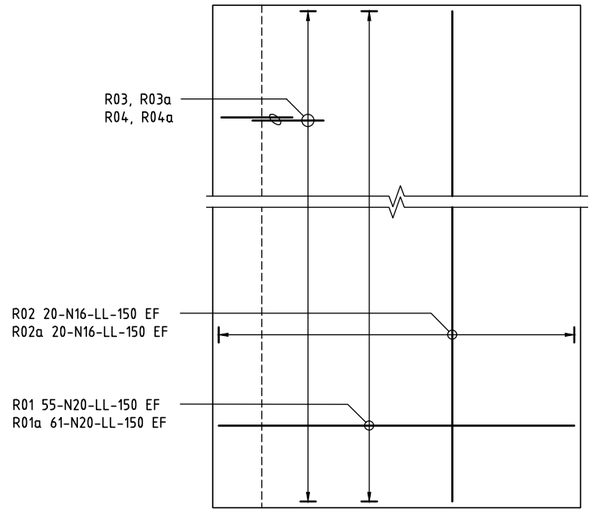

PLAN OF BASE SLAB
RETAINING WALL
SCALE 1:25

03

GENERAL NOTES

ALL DIMENSIONS ARE IN MILLIMETRES UNLESS NOTED OTHERISE.
CONCRETE EXPOSURE CLASSIFICATION: B1.
MINIMUM 28 DAY COMPRESSIVE STRENGTH OF CONCRETE SHALL BE 40MPA.
EDGES SHALL BE CHAMFERED 20 X 20 AND RE-ENTRANT ANGLES FILLETED 20 X 20 UNLESS SPECIFIED OTHERISE.
NOMINAL COVER TO REINFORCEMENT NEAREST TO THE CONCRETE SURFACE SHALL BE 45mm UNLESS NOTED OTHERISE.
UNLESS NOTED OTHERISE, THE MINIMUM LAP LENGTHS OF BARS SHALL BE AS FOLLOWS:

BAR SIZE	N12	N16	N20	N24	N28	N32
A) HORIZONTAL BARS WITH >300mm OF CONCRETE CAST BELOW THE BAR	650	900	1150	1430	1730	2060
B) OTHER BARS	500	690	890	1100	1330	1590

CLEAR DISTANCE BETWEEN LAPPED BARS SHALL NOT EXCEED 3 x THE BAR DIAMETER.
REINFORCEMENT MAY BE DISPLACED SLIGHTLY WHERE NECESSARY TO CLEAR DOWELS, ANCHORS, LIFTING DEVICES, DUCTS, DRAINAGE LINES AND GENERAL FITMENTS.
FOR REINFORCEMENT NOTES REFER DRG No 215.

LDC
These plans are referred to in certificate No. **16746** approved by:
Eric Hausfeld
Registered Certifier
Registration No: BDC 2416
Categories: Certifier – Subdivision
Certifier – Strata
Certifier – Stormwater
Certifier – Road & Drainage
Certifier – Hydraulic (stormwater)
Land Development Certificates
www.LDC.com.au

DRAWING FILE LOCATION / NAME: V:_Vault\Projects\3001\30013046\110_CADD\CAD\DWG\30013046-187.dwg
PLOT DATE: 13 Oct 2021 TIME: 22:45:04

EXTERNAL REFERENCE FILES: X_30013046_SMEC_A1

REV	DATE	AMENDMENT / REVISION DESCRIPTION	WVR No.	APPROVAL
01	10.07.2021	ISSUED FOR TENDER	001	JD
02	20.08.2021	ISSUED FOR TENDER	001	JD
03	14.10.2021	ISSUED FOR TENDER	002	JD

TITLE	NAME
DRAFTER	T.SABAPATHI
DRAFTING CHECK	V.S.KODURU
DESIGNER	V.S.KODURU
DESIGN CHECK	V.BALAKRISHNAN
PROJECT MANAGER	J.DICKERSON
PROJECT DIRECTOR	K.LUU

SCALES AT A1 SIZE DRAWING: 0 1000 2000 3000 4000 5000mm; 1000 500; 1:100

DESIGNER: SMEC
Member of the Surbana Jurong Group
© ABN 47 065 475 149
LEVEL 5, 20 BERRY STREET
NORTH SYDNEY NSW 2060
SMEC PROJECT No 30013046

CLIENT: FRASERS PROPERTY

PROJECT TITLE: SHRIMPTON CREEK BRIDGE
RETAINING WALL
REINFORCEMENT DETAILS

SCALE	PHASE	PROJECT / DRAWING No.	REVISION
AS NOTED	TENDER	30013046-187	03

150 mm ON ORIGINAL
A1

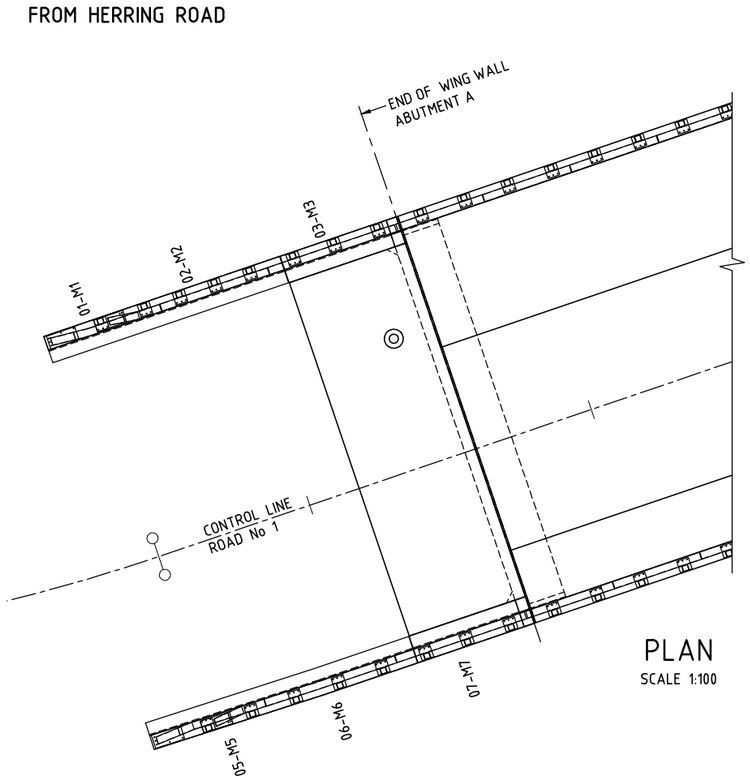

PLAN
SCALE 1:100

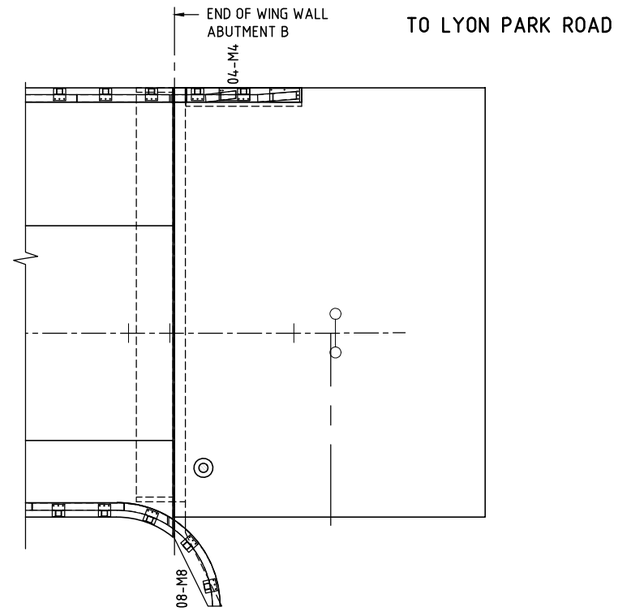

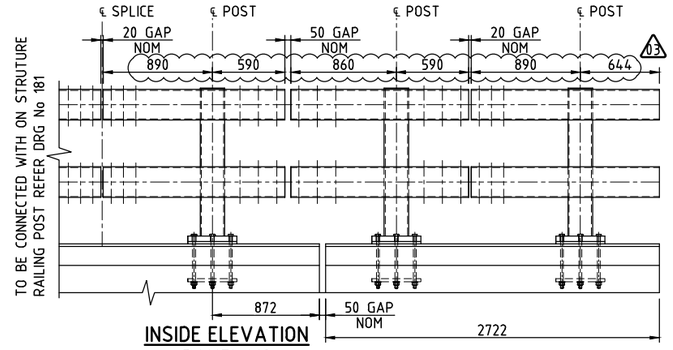

INSIDE ELEVATION
PANEL M8
SCALE 1:25
(CYCLIST/PEDESTRIAN RAILS NOT SHOWN)

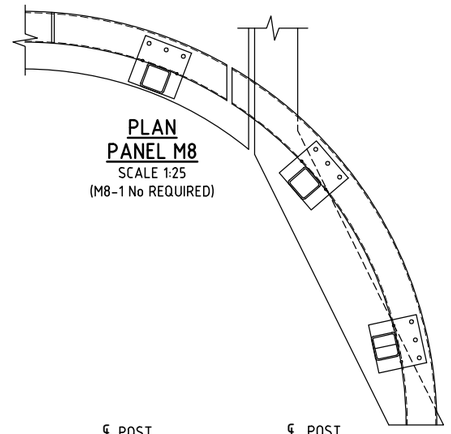

PLAN
PANEL M8
SCALE 1:25
(M8-1 No REQUIRED)

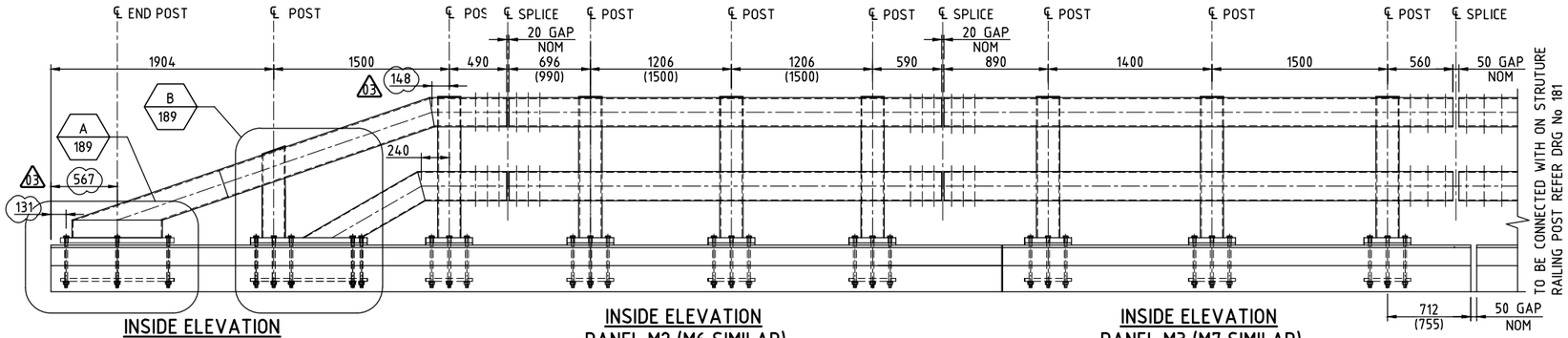

INSIDE ELEVATION
PANEL M1 (M5 SIMILAR)
SCALE 1:25

INSIDE ELEVATION
PANEL M2 (M6 SIMILAR)
SCALE 1:25
(CYCLIST/PEDESTRIAN RAILS NOT SHOWN)

INSIDE ELEVATION
PANEL M3 (M7 SIMILAR)
SCALE 1:25
(CYCLIST/PEDESTRIAN RAILS NOT SHOWN)

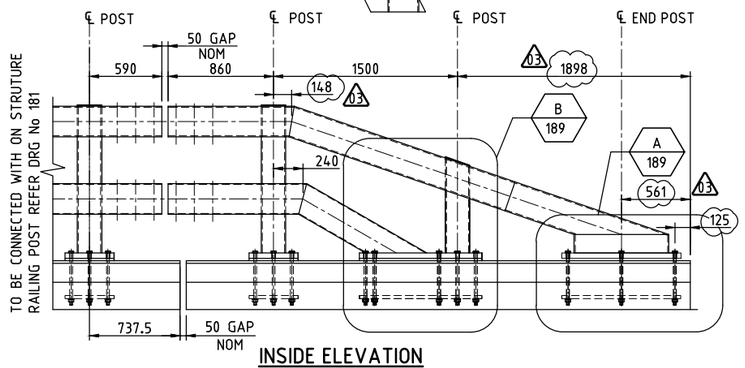

INSIDE ELEVATION
PANEL M4
SCALE 1:25

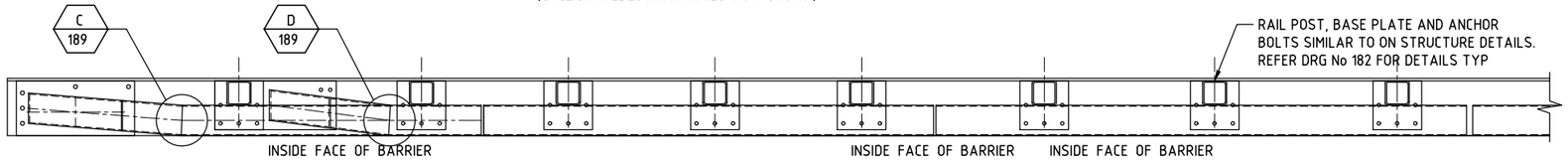

PLAN
PANEL M1 (M5)
SCALE 1:25
(M1-1 No REQUIRED)
(M5-5 No REQUIRED)

PLAN
PANEL M2 (M6 SIMILAR)
SCALE 1:25
(M2-1 No REQUIRED)
(M6-1 No REQUIRED)

PLAN
PANEL M3 (M7 SIMILAR)
SCALE 1:25
(M3-1 No REQUIRED)
(M7-1 No REQUIRED)

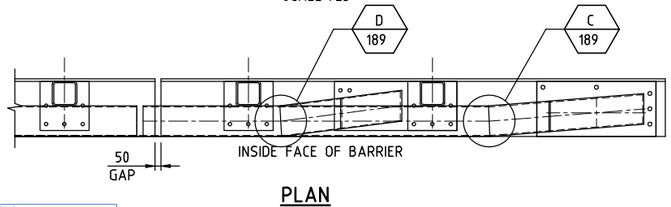

PLAN
PANEL M4
SCALE 1:25
(M4-1 No REQUIRED)

These plans are referred to in certificate no. **16746** approved by:
Eric Hausfeld
Registered Certifier
Registration No: BDC 2416
Categories: Certifier – Subdivision, Certifier – Strata, Certifier – Stormwater, Certifier – Road & Drainage, Certifier – Hydraulic (stormwater)
Land Development Certificates
www.LDC.com.au

GENERAL NOTES

FOR GENERAL NOTES RELATED TO THIS DRAWING, REFER DRG No 182.
03 ELEVATIONS DRAWN ARE ALONG THE LENGTH.

DRAWING FILE LOCATION / NAME: V:_Vault\Projects\3001\30013046\110_CADD\CAD\DWG\30013046-188.dwg
PLOT DATE: 14 Oct 2021 TIME: 00:22:18

EXTERNAL REFERENCE FILES: X_30013046_SMEC_A1, X_DES_MAIN, X_BRG_PLAN

REV	DATE	AMENDMENT / REVISION DESCRIPTION	WVR No.	APPROVAL
01	10.07.2021	ISSUED FOR TENDER	001	JD
02	20.08.2021	ISSUED FOR TENDER (TITLE REVISED)	001	JD
03	14.10.2021	ISSUED FOR TENDER	002	JD

TITLE	NAME
DRAFTER	T.SABAPATHI
DRAFTING CHECK	V.S.KODURU
DESIGNER	V.S.KODURU
DESIGN CHECK	V.BALAKRISHNAN
PROJECT MANAGER	J.DICKERSON
PROJECT DIRECTOR	K.LUU

SCALES AT A1 SIZE DRAWING: 1:100 (0 1000 2000 3000 4000 5000mm; 1000 500); 1:25 (0 500 1000mm; 250 125)

DESIGNER: SMEC
Member of the Surbana Jurong Group
© ABN 47 065 475 149
LEVEL 5, 20 BERRY STREET
NORTH SYDNEY NSW 2060
SMEC PROJECT No 30013046

CLIENT: FRASERS PROPERTY

PROJECT TITLE: SHRIMPTON CREEK BRIDGE

OFF STRUCTURE BARRIER DETAILS SHEET A

SCALE	PHASE	PROJECT / DRAWING No.	REVISION
AS NOTED	TENDER	30013046-188	03

150 mm ON ORIGINAL
A1

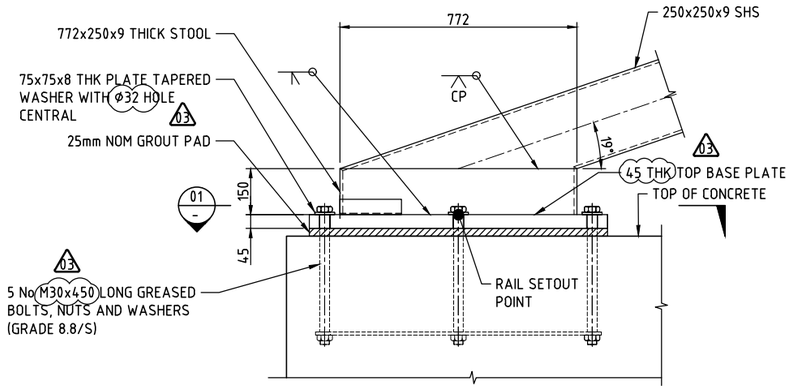

DETAIL A
SCALE 1:10
188

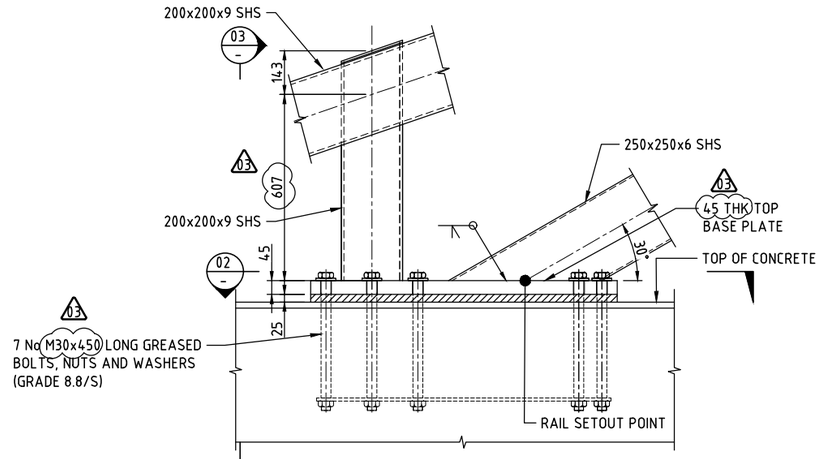

DETAIL B
SCALE 1:10
188
(PFC NOT SHOWN FOR CLARITY)

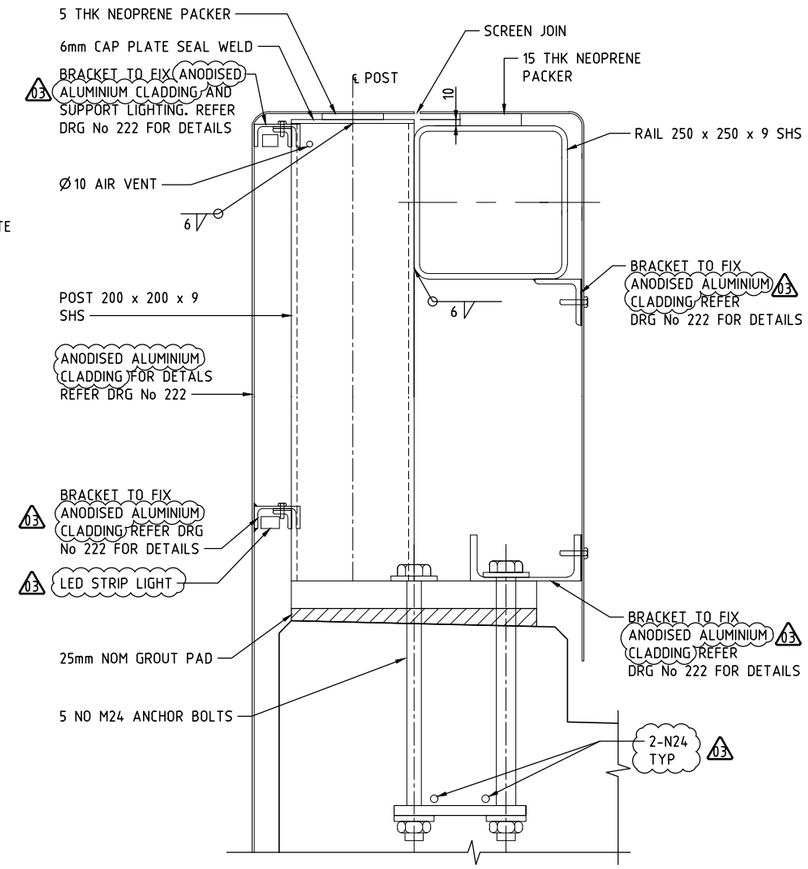

SECTION 3
SCALE 1:5
-

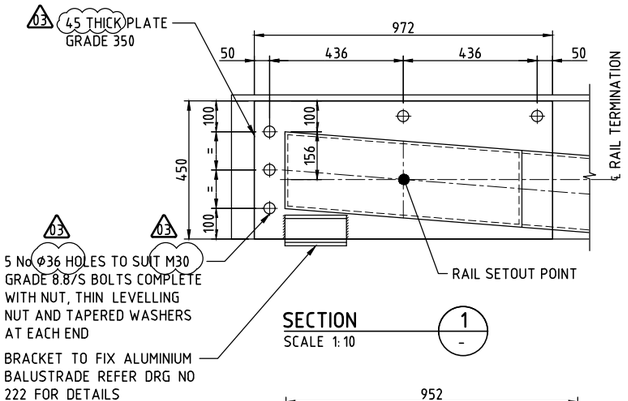

SECTION 1
SCALE 1:10
-

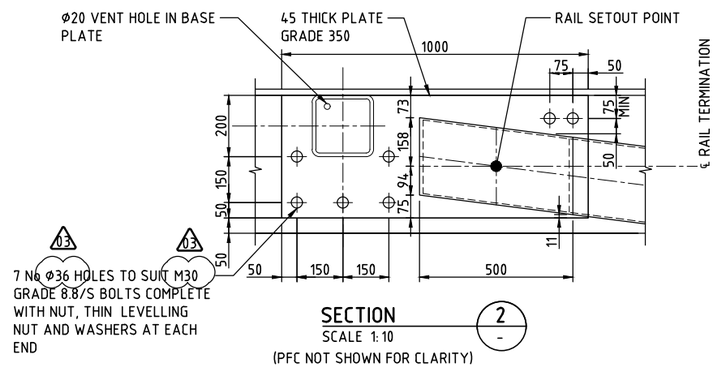

SECTION 2
SCALE 1:10
-
(PFC NOT SHOWN FOR CLARITY)

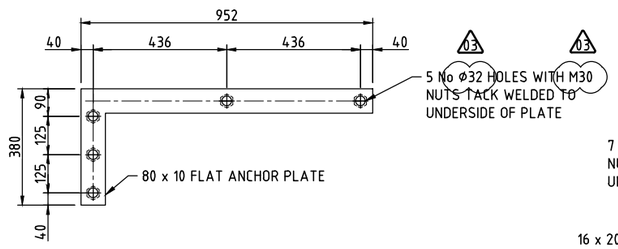

RAIL POST ANCHOR PLATE ASSEMBLY
SCALE 1:10

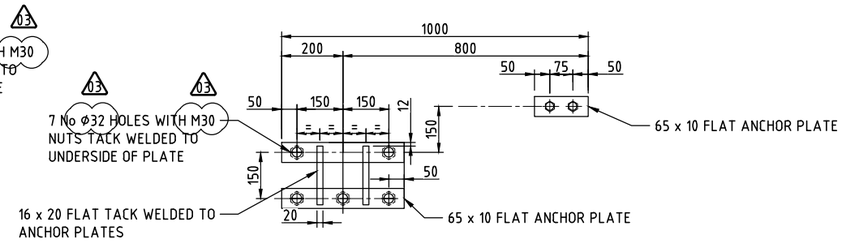

RAIL POST ANCHOR PLATE ASSEMBLY
SCALE 1:10

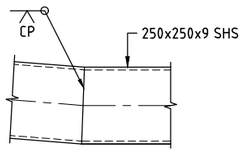

DETAIL C
SCALE 1:10
188

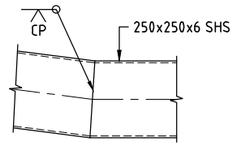

DETAIL D
SCALE 1:10
-

These plans are referred to in certificate no. **16746** approved by:
Eric Hausfeld
Registered Certifier
Registration No: BDC 2416
Categories: Certifier – Subdivision, Certifier – Strata, Certifier – Stormwater, Certifier – Road & Drainage, Certifier – Hydraulic (stormwater)
Land Development Certificates
www.LDC.com.au

GENERAL NOTES

FOR GENERAL NOTES RELATED TO THIS DRAWING, REFER DRG No 182.

DRAWING FILE LOCATION / NAME: V:_Vault\Projects\3001\30013046\110_CADD\CAD\DWG\30013046-189.dwg
PLOT DATE: 14 Oct 2021 TIME: 00:31:58

EXTERNAL REFERENCE FILES: X_30013046_SMEC_A1, X_BRG_SEC

REV	DATE	AMENDMENT / REVISION DESCRIPTION	WVR No.	APPROVAL
01	10.07.2021	ISSUED FOR TENDER	001	JD
02	20.08.2021	ISSUED FOR TENDER (DETAILS REVISED)	001	JD
03	14.10.2021	ISSUED FOR TENDER	002	JD

TITLE	NAME
DRAFTER	T.SABAPATHI
DRAFTING CHECK	V.S.KODURU
DESIGNER	V.S.KODURU
DESIGN CHECK	V.BALAKRISHNAN
PROJECT MANAGER	J.DICKERSON
PROJECT DIRECTOR	K.LUU

SCALES AT A1 SIZE DRAWING: 1:10 (0 100 200 300 400 500mm); 1:5 (0 100 200mm)

DESIGNER: SMEC
Member of the Surbana Jurong Group
© ABN 47 065 475 149
LEVEL 5, 20 BERRY STREET
NORTH SYDNEY NSW 2060
SMEC PROJECT No 30013046

CLIENT: FRASERS PROPERTY

PROJECT TITLE: SHRIMPTON CREEK BRIDGE
OFF STRUCTURE BARRIER DETAILS
SHEET B

SCALE	PHASE	PROJECT / DRAWING No.	REVISION
AS NOTED	TENDER	30013046-189	03

150 mm ON ORIGINAL
A1

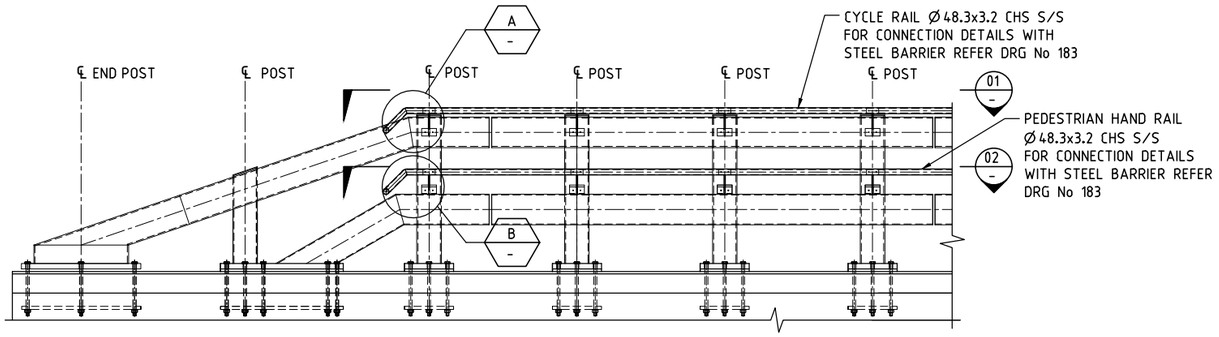

CYCLIST/PEDESTRIAN RAILS INSIDE ELEVATION
SCALE 1:25

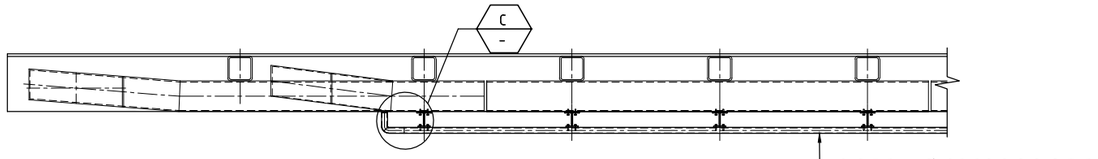

SECTION 1
SCALE 1:25

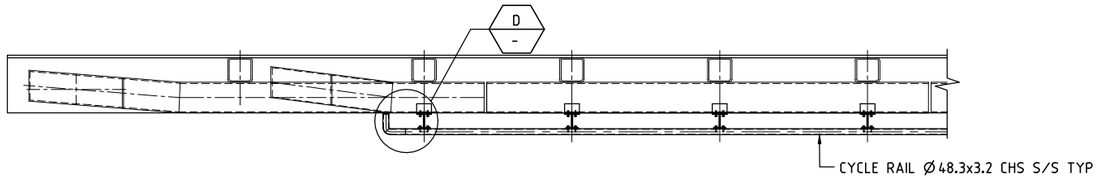

SECTION 2
SCALE 1:25

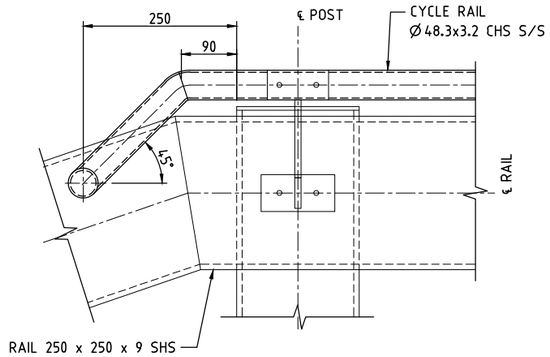

DETAIL A
SCALE 1:5

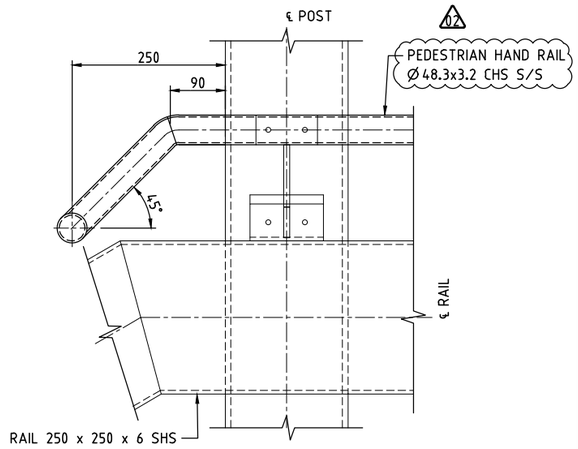

DETAIL B
SCALE 1:5

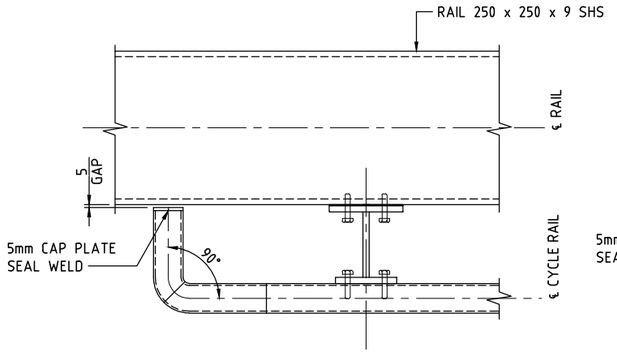

DETAIL C
SCALE 1:5

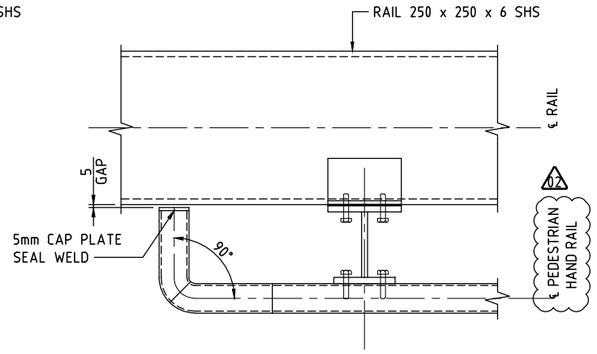

DETAIL D
SCALE 1:5

These plans are referred to in certificate no. **16746** approved by:
Eric Hausfeld
Registered Certifier
Registration No: BDC 2416
Categories: Certifier – Subdivision
Certifier – Strata
Certifier – Stormwater
Certifier – Road & Drainage
Certifier – Hydraulic (stormwater)
Land Development Certificates
www.LDC.com.au

GENERAL NOTES

FOR GENERAL NOTES RELATED TO THIS DRAWING, REFER DRG No 182.

DRAWING FILE LOCATION / NAME	PLOT DATE	TIME
V:_Vault\Projects\3001\30013046\110_CADD\CAD\DWG\30013046-190.dwg	14 Oct 2021	00:21:24

EXTERNAL REFERENCE FILES: X_30013046_SMEC_A1, X_BRG_SEC

REV	DATE	AMENDMENT / REVISION DESCRIPTION	WVR No.	APPROVAL
01	20.08.2021	ISSUED FOR TENDER	001	JD
02	14.10.2021	ISSUED FOR TENDER	002	JD

TITLE	NAME
DRAFTER	T.SABAPATHI
DRAFTING CHECK	V.S.KODURU
DESIGNER	V.S.KODURU
DESIGN CHECK	V.BALAKRISHNAN
PROJECT MANAGER	J.DICKERSON
PROJECT DIRECTOR	K.LUU

SCALES AT A1 SIZE DRAWING: 0 500 1000mm; 250 125; 1:25

DESIGNER: SMEC
Member of the Surbana Jurong Group
© ABN 47 065 475 149
LEVEL 5, 20 BERRY STREET
NORTH SYDNEY NSW 2060
SMEC PROJECT No 30013046

CLIENT: FRASERS PROPERTY

PROJECT TITLE: SHRIMPTON CREEK BRIDGE

OFF STRUCTURE BARRIER CYCLE RAIL AND HAND RAIL TERMINATION DETAILS

SCALE	PHASE	PROJECT / DRAWING No.	REVISION
AS NOTED	TENDER	30013046-190	02

150 mm ON ORIGINAL
A1

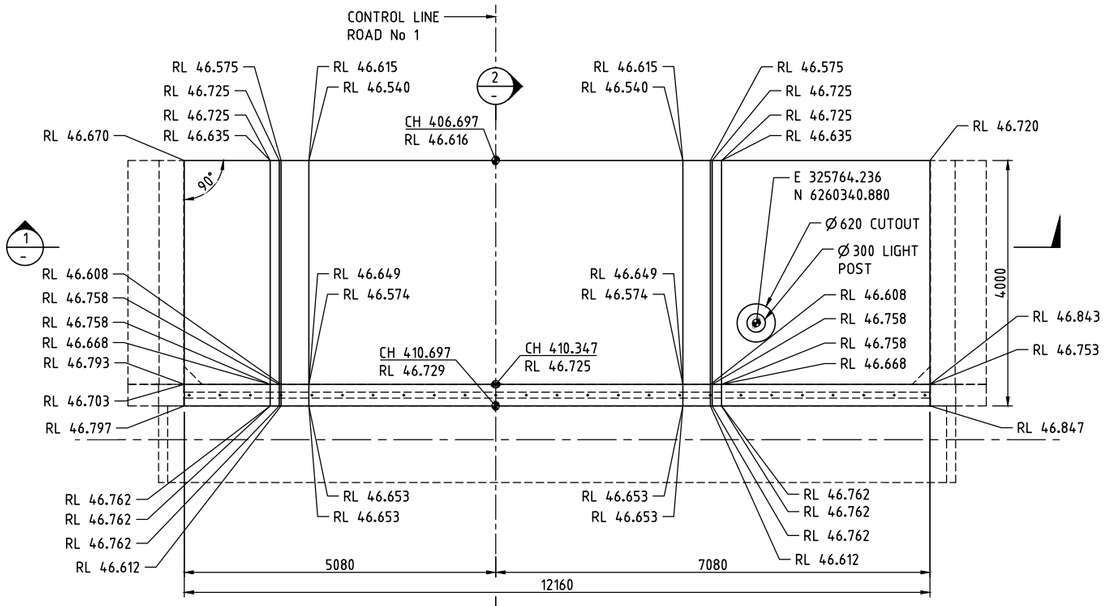

PLAN
SCALE 1:50

ABUTMENT A

BARRIER NOT SHOWN FOR CLARITY

END OF DECK AND UPSTAND RL'S SHOWN MAKE NO ALLOWANCE FOR COVER PLATE RECESS WHERE APPLICABLE

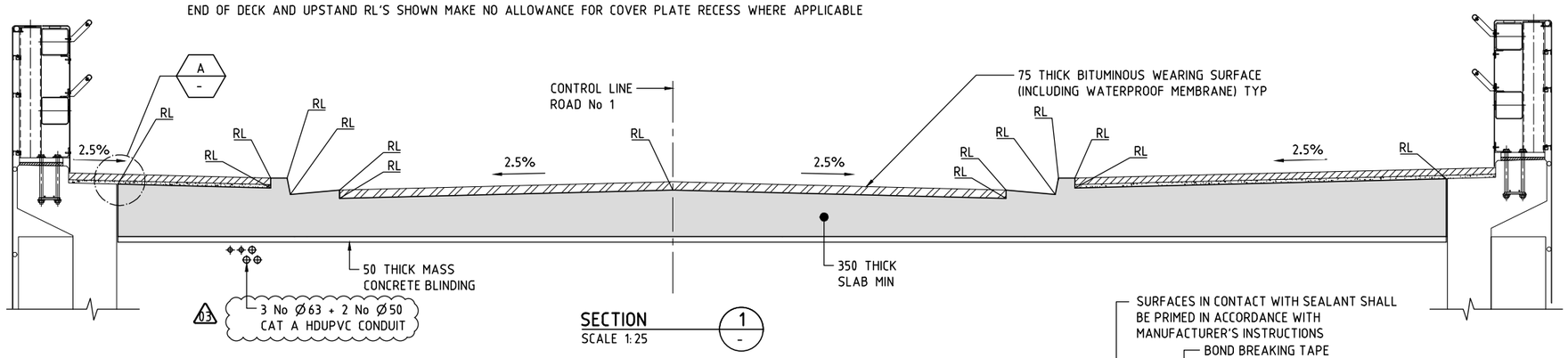

SECTION 1
SCALE 1:25

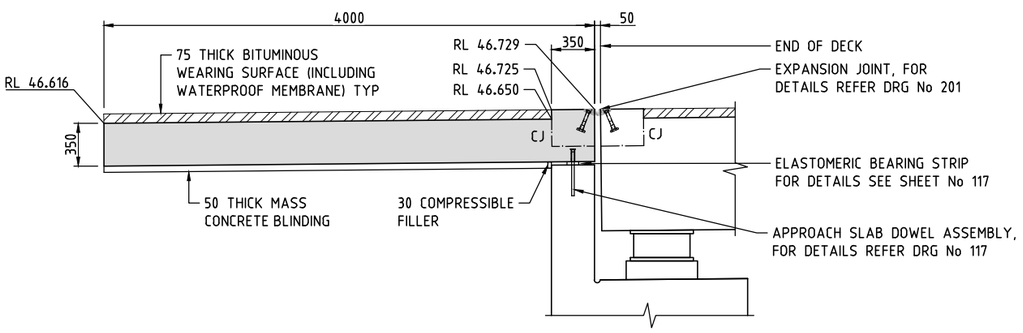

SECTION 2
SCALE 1:25

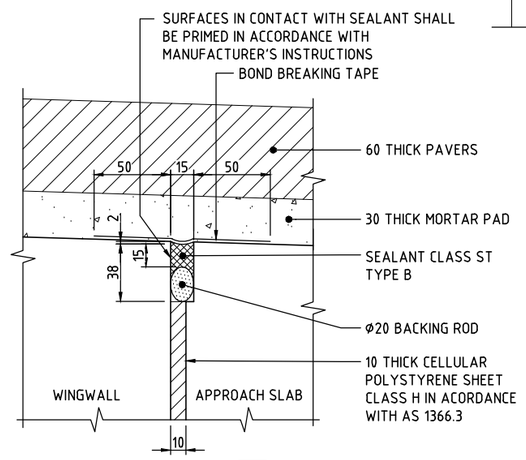

DETAIL A
SCALE 1:10

These plans are referred to in certificate no: **16746** approved by:

Eric Hausfeld
Registered Certifier

Registration No: BDC 2416
Categories: Certifier – Subdivision
Certifier – Strata
Certifier – Stormwater
Certifier – Road & Drainage
Certifier – Hydraulic (stormwater)

Land Development Certificates
www.LDC.com.au

GENERAL NOTES

ALL DIMENSIONS ARE IN MILLIMETRES UNLESS NOTED OTHERWISE.
CONCRETE EXPOSURE CLASSIFICATION: B1.
MINIMUM 28 DAY COMPRESSIVE STRENGTH OF CONCRETE SHALL BE 40MPa.
EDGES SHALL BE CHAMFERED 20 x 20 AND RE-ENTRANT ANGLES FILLETED 20 x 20 UNLESS SPECIFIED OTHERWISE.

150 mm ON ORIGINAL

DRAWING FILE LOCATION / NAME: V:_Vault\Projects\3001\30013046\110_CADD\CAD\DWG\30013046-191.dwg

PLOT DATE: 14 Oct 2021 TIME: 00:21:17

EXTERNAL REFERENCE FILES: X_30013046_SMEC_A1, X_DES_MAIN, X_BRG_PLAN

REV	DATE	AMENDMENT / REVISION DESCRIPTION	WVR No.	APPROVAL
01	10.07.2021	ISSUED FOR TENDER	001	JD
02	20.08.2021	ISSUED FOR TENDER	001	JD
03	14.10.2021	ISSUED FOR TENDER	002	JD

TITLE	NAME
DRAFTER	T.SABAPATHI
DRAFTING CHECK	V.S.KODURU
DESIGNER	V.S.KODURU
DESIGN CHECK	V.BALAKRISHNAN
PROJECT MANAGER	J.DICKERSON
PROJECT DIRECTOR	K.LUU

SCALES AT A1 SIZE DRAWING: 0 1000 2000mm; 500 250 1:50

DESIGNER: SMEC
Member of the Surbana Jurong Group
© ABN 47 065 475 149
LEVEL 5, 20 BERRY STREET
NORTH SYDNEY NSW 2060
SMEC PROJECT No 30013046

CLIENT: FRASERS PROPERTY

PROJECT TITLE: SHRIMPTON CREEK BRIDGE

APPROACH SLAB CONCRETE
SHEET A

SCALE	PHASE	PROJECT / DRAWING No.	REVISION
AS NOTED	TENDER	30013046-191	03

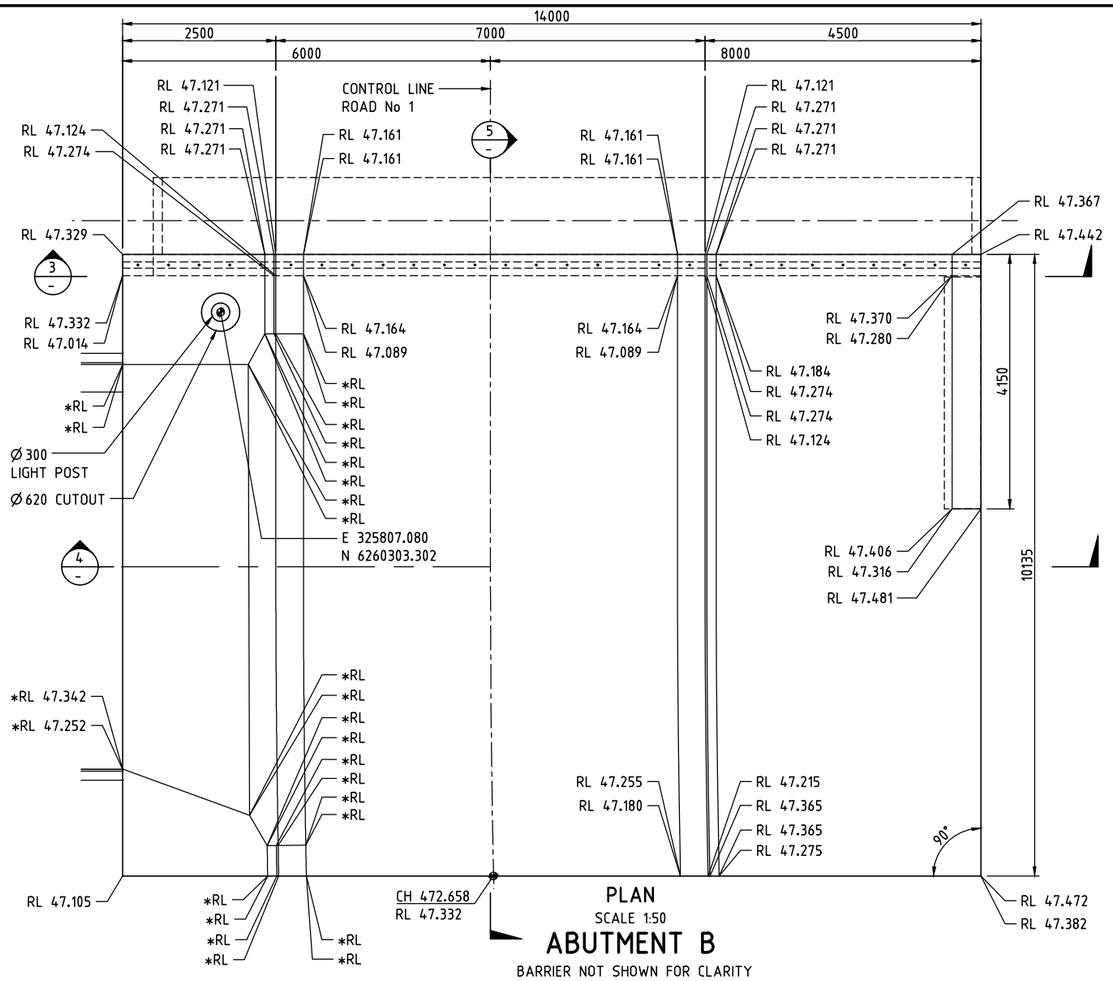

PLAN
SCALE 1:50

ABUTMENT B

BARRIER NOT SHOWN FOR CLARITY

END OF DECK AND UPSTAND RL'S SHOWN MAKE NO ALLOWANCE FOR COVER PLATE RECESS WHERE APPLICABLE

* FOR DETAILS REFER CIVILS DRAWINGS PREPARED BY ADW JOHNSON

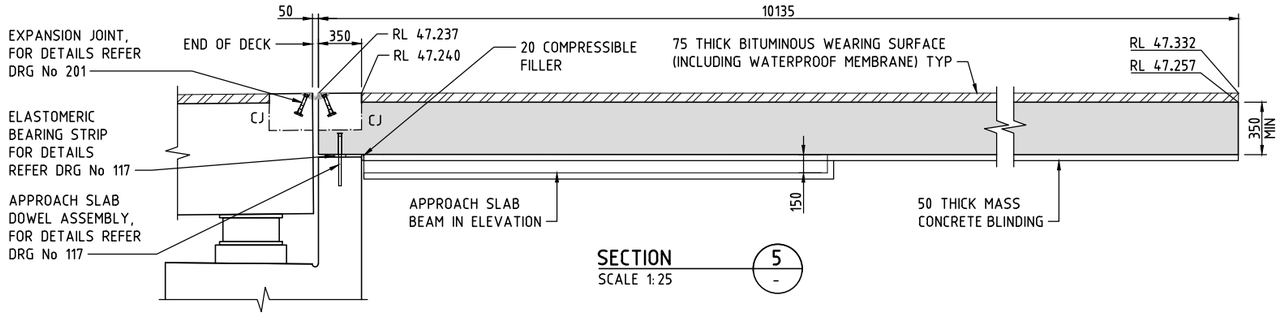

SECTION 5
SCALE 1:25

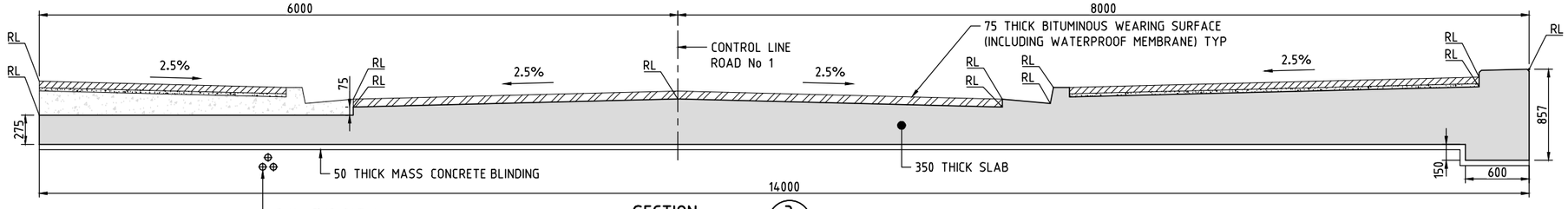

SECTION 3
SCALE 1:25

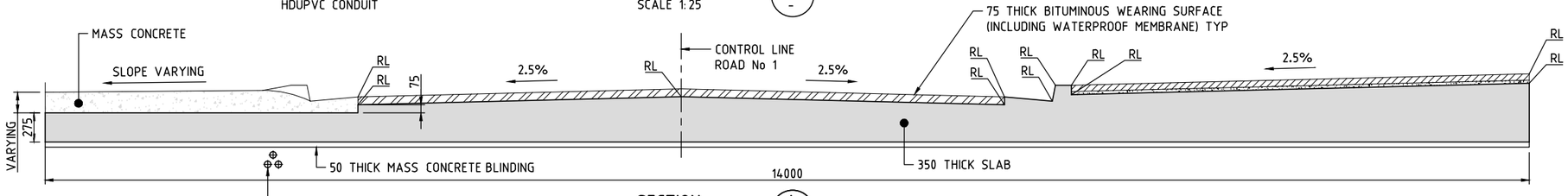

SECTION 4
SCALE 1:25

These plans are referred to in certificate no. **16746** approved by:
Eric Hausfeld
Registered Certifier
Registration No: BDC 2416
Categories: Certifier – Subdivision, Certifier – Strata, Certifier – Stormwater, Certifier – Road & Drainage, Certifier – Hydraulic (stormwater)
Land Development Certificates
www.LDC.com.au

GENERAL NOTES
FOR GENERAL NOTES RELATING TO THIS DRAWING, REFER DRG No 191.

DRAWING FILE LOCATION / NAME: V:_Vault\Projects\3001\30013046\110_CADD\CAD\DWG\30013046-192.dwg
PLOT DATE: 14 Oct 2021 TIME: 00:21:06

EXTERNAL REFERENCE FILES: X_30013046_SMEC_A1, X_BRS_MAIN, X_BRG_PLAN, X_BRG_SEC, X_SURV

REV	DATE	AMENDMENT / REVISION DESCRIPTION	WVR No.	APPROVAL
01	10.07.2021	ISSUED FOR TENDER	001	JD
02	20.08.2021	ISSUED FOR TENDER	001	JD
03	14.10.2021	ISSUED FOR TENDER	002	JD

TITLE	NAME
DRAFTER	T.SABAPATHI
DRAFTING CHECK	V.S.KODURU
DESIGNER	V.S.KODURU
DESIGN CHECK	V.BALAKRISHNAN
PROJECT MANAGER	J.DICKERSON
PROJECT DIRECTOR	K.LUU

SCALES AT A1 SIZE DRAWING: 0 1000 2000mm; 500 250; 1:50

DESIGNER: SMEC
Member of the Surbana Jurong Group
© ABN 47 065 475 149
LEVEL 5, 20 BERRY STREET
NORTH SYDNEY NSW 2060
SMEC PROJECT No 30013046

CLIENT: FRASERS PROPERTY

PROJECT TITLE: SHRIMPTON CREEK BRIDGE

APPROACH SLAB CONCRETE SHEET B

SCALE	PHASE	PROJECT / DRAWING No.	REVISION
AS NOTED	TENDER	30013046-192	03

150 mm ON ORIGINAL
A1

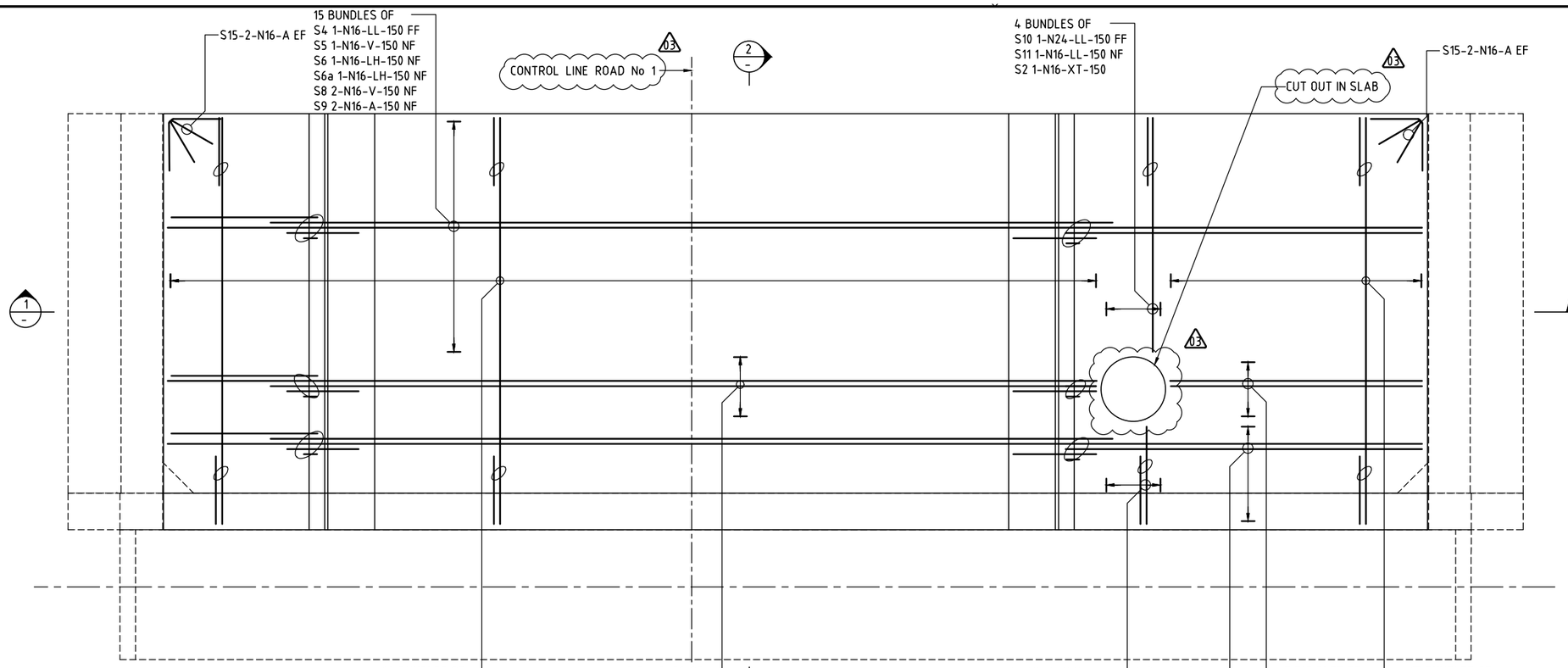

PLAN
SCALE 1:25
ABUTMENT A
BARRIER NOT SHOWN FOR CLARITY

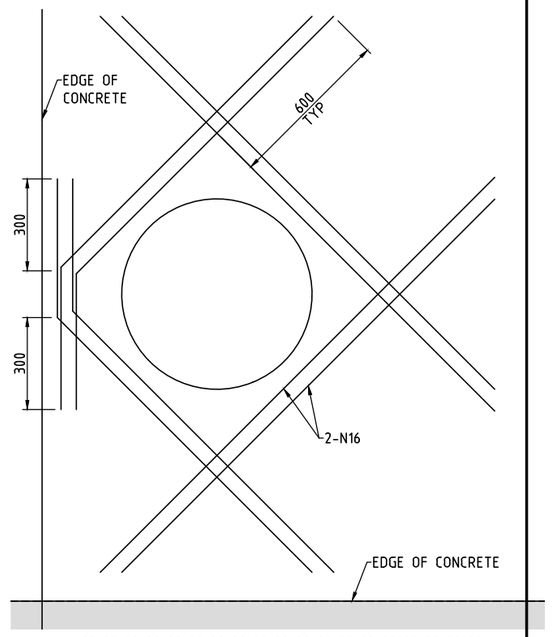

ADDITIONAL REBAR AT CUTOUT LOCATION
SCALE 1:10

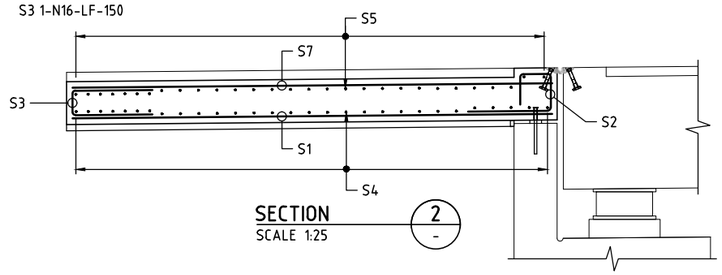

SECTION 2
SCALE 1:25

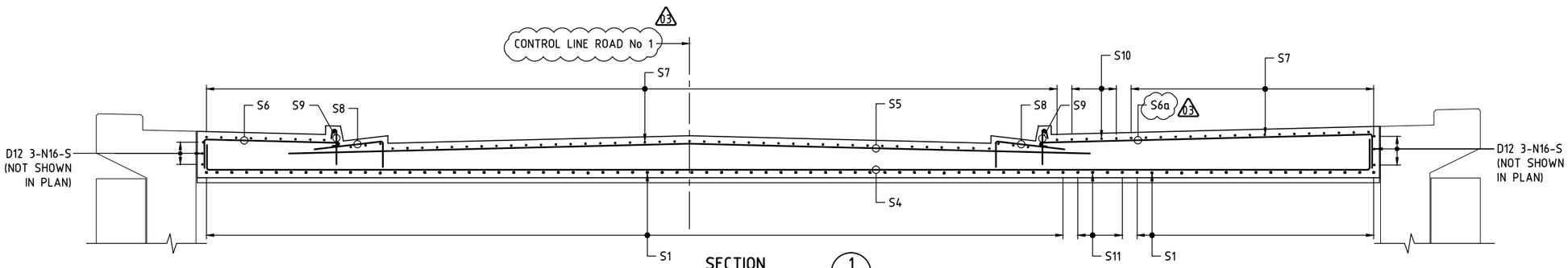

SECTION 1
SCALE 1:25

GENERAL NOTES

NOMINAL COVER TO REINFORCEMENT NEAREST TO THE CONCRETE SURFACE SHALL BE 45mm UNLESS NOTED OTHERWISE.
UNLESS NOTED OTHERWISE, THE MINIMUM LAP LENGTHS OF BARS SHALL BE AS FOLLOWS:

BAR SIZE:	N12	N16	N20	N24	N28	N32	N36
a) HORIZONTAL BARS WITH >300mm OF CONCRETE CAST BELOW THE BAR	650	900	1150	1430	1730	2060	2410
b) OTHER BARS	500	690	890	1100	1330	1590	1860

CLEAR DISTANCE BETWEEN LAPPED BARS SHALL NOT EXCEED 3 x THE BAR DIAMETER.
REINFORCEMENT MAY BE DISPLACED SLIGHTLY WHERE NECESSARY TO CLEAR DOWELS, ANCHORS, LIFTING DEVICES, DUCTS, DRAINAGE LINES AND GENERAL FITMENTS.
FOR REINFORCEMENT NOTES REFER DRG No 215.

LDC
These plans are referred to in certificate no. 16746 approved by:
Eric Hausfeld
Registered Certifier
Registration No: BDC 2416
Categories: Certifier – Subdivision, Certifier – Strata, Certifier – Stormwater, Certifier – Road & Drainage, Certifier – Hydraulic (stormwater)
Land Development Certificates
www.LDC.com.au

DRAWING FILE LOCATION / NAME: V:_Vault\Projects\3001\30013046\110_CADD\CAD\DWG\30013046-195.dwg
PLOT DATE: 14 Oct 2021 TIME: 00:20:58

EXTERNAL REFERENCE FILES: X_30013046_SMEC_A1, X_DES_MAIN, X_BRG_PLAN

REV	DATE	AMENDMENT / REVISION DESCRIPTION	WVR No.	APPROVAL
01	10.07.2021	ISSUED FOR TENDER	001	JD
02	20.08.2021	ISSUED FOR TENDER	001	JD
03	14.10.2021	ISSUED FOR TENDER	002	JD

TITLE	NAME
DRAFTER	T.SABAPATHI
DRAFTING CHECK	V.S.KODURU
DESIGNER	V.S.KODURU
DESIGN CHECK	V.BALAKRISHNAN
PROJECT MANAGER	J.DICKERSON
PROJECT DIRECTOR	K.LUU

SCALES AT A1 SIZE DRAWING: 0 1000 2000mm; 500 250; 1:50

DESIGNER: SMEC
Member of the Surbana Jurong Group
© ABN 47 065 475 149
LEVEL 5, 20 BERRY STREET
NORTH SYDNEY NSW 2060
SMEC PROJECT No 30013046

CLIENT: FRASERS PROPERTY

PROJECT TITLE: SHRIMPTON CREEK BRIDGE
APPROACH SLAB REINFORCEMENT SHEET A

SCALE	PHASE	PROJECT / DRAWING No.	REVISION
AS NOTED	TENDER	30013046-195	03

150 mm ON ORIGINAL
A1

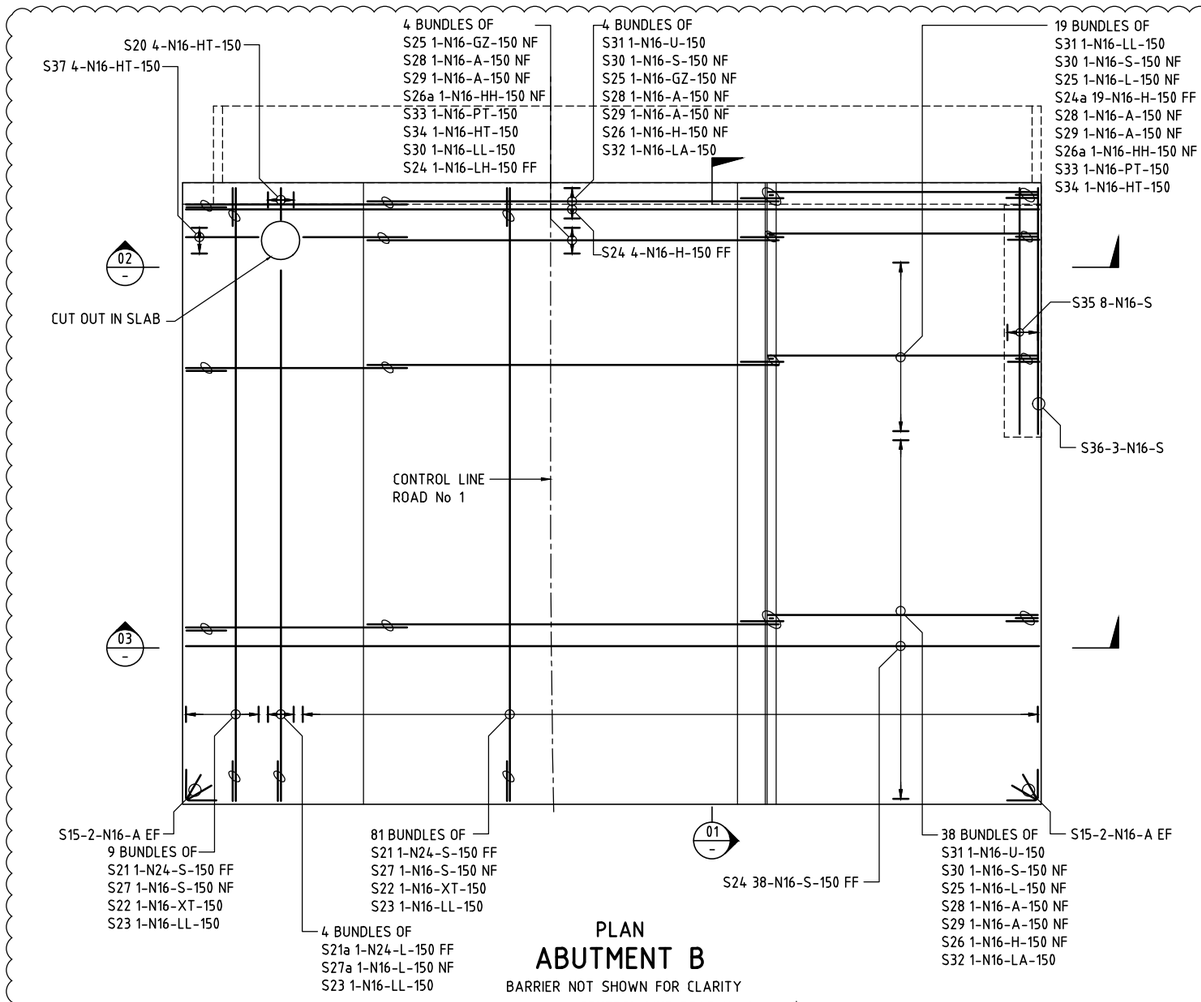

PLAN
ABUTMENT B
BARRIER NOT SHOWN FOR CLARITY

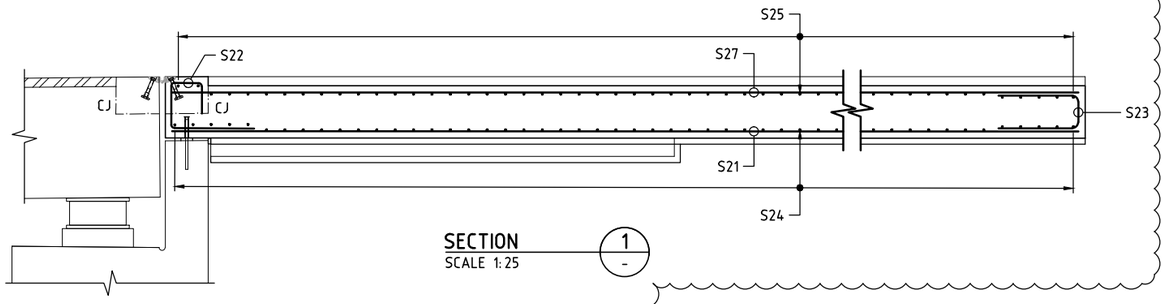

SECTION 1
SCALE 1:25

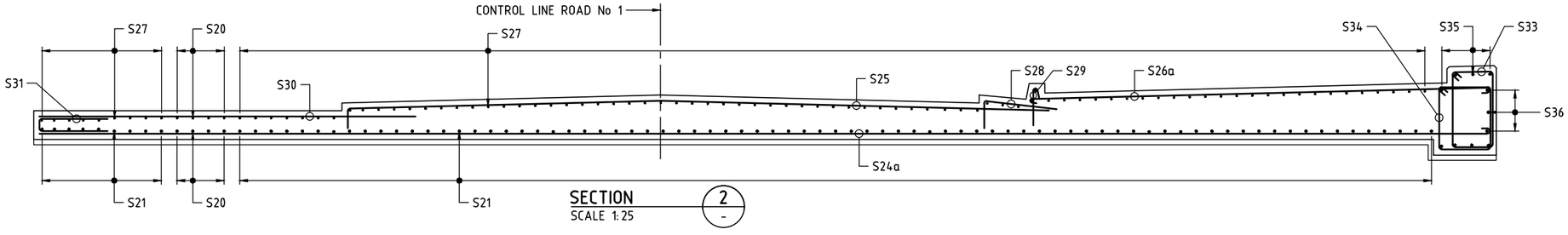

SECTION 2
SCALE 1:25

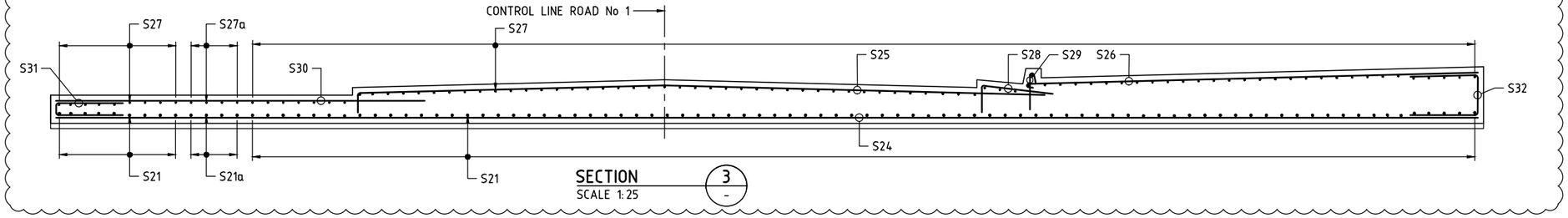

SECTION 3
SCALE 1:25

These plans are referred to in certificate no. **167746** approved by:
Eric Hausfeld
Registered Certifier
Registration No: BDC 2416
Categories: Certifier – Subdivision, Certifier – Strata, Certifier – Stormwater, Certifier – Road & Drainage, Certifier – Hydraulic (stormwater)
Land Development Certificates
www.LDC.com.au

GENERAL NOTES
FOR GENERAL NOTES RELATING TO THIS DRAWING, REFER DRG No 195.

DRAWING FILE LOCATION / NAME: V:_Vault\Projects\3001\30013046\110_CADD\CAD\DWG\30013046-196.dwg
PLOT DATE: 14 Oct 2021 TIME: 00:20:03

EXTERNAL REFERENCE FILES: X_30013046_SMEC_A1, X_DES_MAIN, X_BRG_PLAN

REV	DATE	AMENDMENT / REVISION DESCRIPTION	WVR No.	APPROVAL
01	10.07.2021	ISSUED FOR TENDER	001	JD
02	20.08.2021	ISSUED FOR TENDER	001	JD
03	14.10.2021	ISSUED FOR TENDER	002	JD

TITLE	NAME
DRAFTER	T.SABAPATHI
DRAFTING CHECK	V.S.KODURU
DESIGNER	V.S.KODURU
DESIGN CHECK	V.BALAKRISHNAN
PROJECT MANAGER	J.DICKERSON
PROJECT DIRECTOR	K.LUU

SCALES AT A1 SIZE DRAWING: 0 1000 2000mm 1:50; 0 500 1000mm 1:25

DESIGNER: SMEC
Member of the Surbana Jurong Group
© ABN 47 065 475 149
LEVEL 5, 20 BERRY STREET
NORTH SYDNEY NSW 2060
SMEC PROJECT No 30013046

CLIENT: FRASERS PROPERTY

PROJECT TITLE: SHRIMPTON CREEK BRIDGE
APPROACH SLAB REINFORCEMENT SHEET B

SCALE	PHASE	PROJECT / DRAWING No.	REVISION
AS NOTED	TENDER	30013046-196	03

150 mm ON ORIGINAL
A1

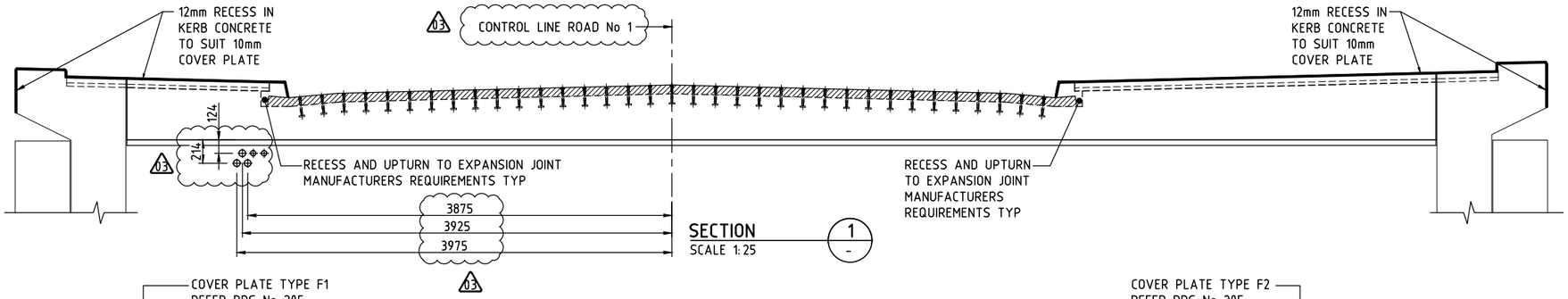

SECTION 1
SCALE 1:25

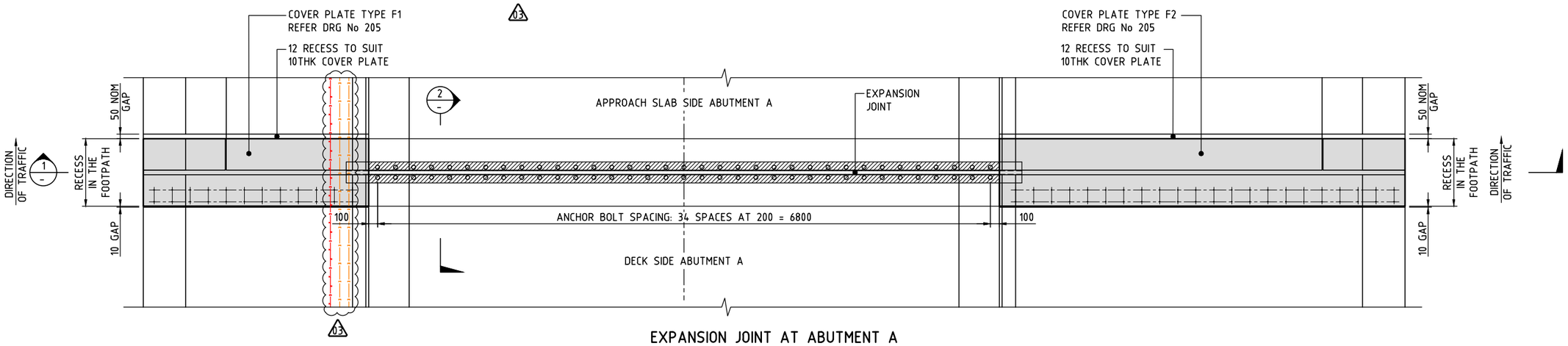

EXPANSION JOINT AT ABUTMENT A
SCALE 1:50

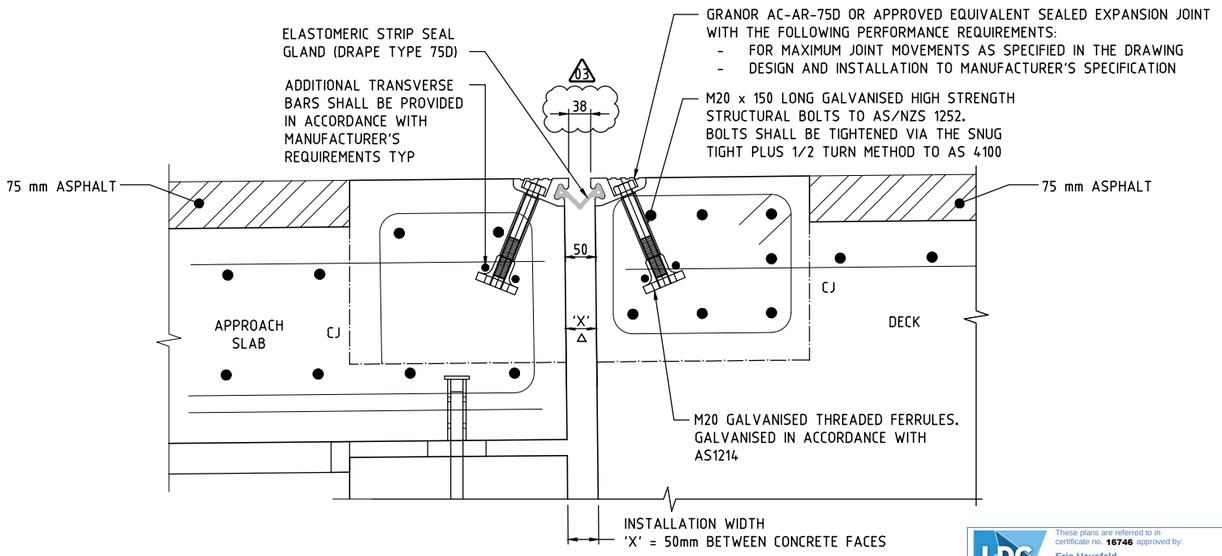

SECTION 2 / - 3 / 202
SCALE 1:5

SIMILAR BUT TO OPPOSITE HAND

△ DENOTES DIMENSIONS AT SHADE AIR TEMPERATURE OF 20-22°C MEASURED NORMAL TO EDGE OF DECK. THE CALCULATED TEMPERATURE MOVEMENT IS APPROXIMATELY 1.05mm PER 1.0°C AT EXPANSION JOINT. JOINT MOVEMENT INCLUDES ALLOWANCE FOR POSSIBLE VARIATION IN COEFFICIENT OF THERMAL EXPANSION

STRIP SEAL EXPANSION JOINT ULTIMATE PERFORMANCE REQUIREMENTS	
INSTALLATION GAP WIDTH SHADE AIR TEMPERATURE 20°C - 22°C	38mm
MAXIMUM ULS CLOSING MOVEMENT	20mm
MAXIMUM ULS OPENING MOVEMENT	25mm

03

03

PROPOSED UTILITIES

PROPOSED Ø50 ELECTRICAL LINE
PROPOSED Ø63 ELECTRICAL LINE

GENERAL NOTES

PERMANENT SEAL ELEMENT TO BE INSTALLED IN ONE LENGTH.
STEEL PLATES SHALL BE GRADE 250 TO AS/NZS 3678.3.
SLOTTED COUNTERSUNK HEAD SCREWS SHALL CONFORM TO AS/NZS 1427.4.
ALL EXPOSED STEEL COMPONENTS EXCEPT STAINLESS STEEL SHALL BE HOT-DIP GALVANISED AFTER FABRICATION IN ACCORDANCE WITH RMS SPECIFICAITON B241.
EDGES TO BE PROTECTIVE TREATED SHALL BE ROUNDED TO A RADIUS 1.5mm UNLESS OTHERWISE SPECIFIED.
ANCHORS FOR COVER PLATE TO BE SETOUT USING A SUITABLE TEMPLATE OR ACTUAL COVER PLATE.
DECK JOINTS TO BE INSTALLED STRICTLY IN ACCORDANCE WITH THE MANUFACTURER'S INSTRUCTIONS.

These plans are referred to in certificate no. **16746** approved by:
Eric Hausfeld
Registered Certifier
Registration No: BDC 2416
Categories: Certifier – Subdivision, Certifier – Strata, Certifier – Stormwater, Certifier – Road & Drainage, Certifier – Hydraulic (stormwater)
Land Development Certificates
www.LDC.com.au

DRAWING FILE LOCATION / NAME: V:_Vault\Projects\3001\30013046\110_CADD\CAD\DWG\30013046-201.dwg
PLOT DATE: 14 Oct 2021 TIME: 00:14:55

EXTERNAL REFERENCE FILES: X_30013046_SMEC_A1, X_BRS_MAIN, X_BRG_PLAN

REV	DATE	AMENDMENT / REVISION DESCRIPTION	WVR No.	APPROVAL
01	10.07.2021	ISSUED FOR TENDER	001	JD
02	20.08.2021	ISSUED FOR TENDER	001	JD
03	14.10.2021	ISSUED FOR TENDER	002	JD

TITLE	NAME
DRAFTER	T.SABAPATHI
DRAFTING CHECK	V.S.KODURU
DESIGNER	V.S.KODURU
DESIGN CHECK	V.BALAKRISHNAN
PROJECT MANAGER	J.DICKERSON
PROJECT DIRECTOR	K.LUU

SCALES AT A1 SIZE DRAWING: 0 500 1000mm; 250 125; 1:25

DESIGNER: SMEC
Member of the Surbana Jurong Group
© ABN 47 065 475 149
LEVEL 5, 20 BERRY STREET
NORTH SYDNEY NSW 2060
SMEC PROJECT No 30013046

CLIENT: FRASERS PROPERTY

PROJECT TITLE: SHRIMPTON CREEK BRIDGE

EXPANSION JOINT DETAILS SHEET A

SCALE	PHASE	PROJECT / DRAWING No.	REVISION
AS NOTED	TENDER	30013046-201	03

150 mm ON ORIGINAL
A1

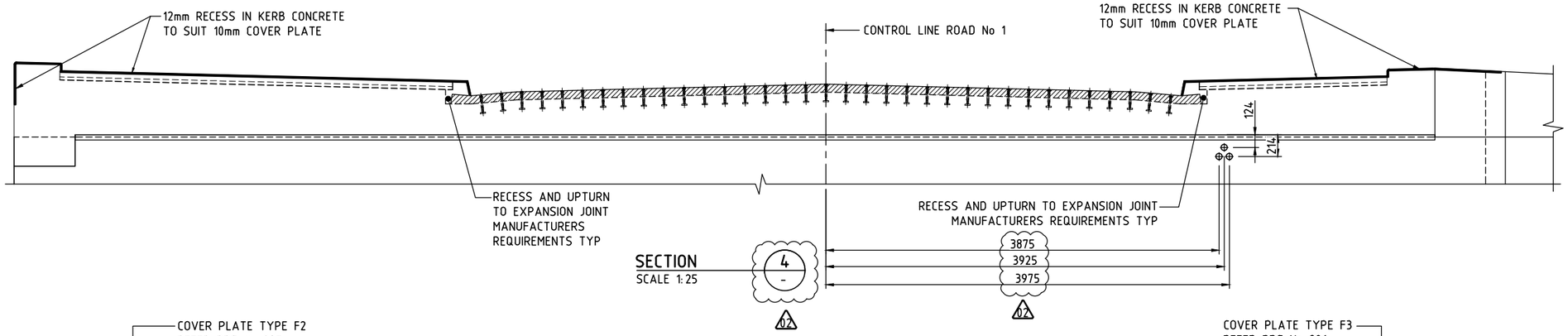

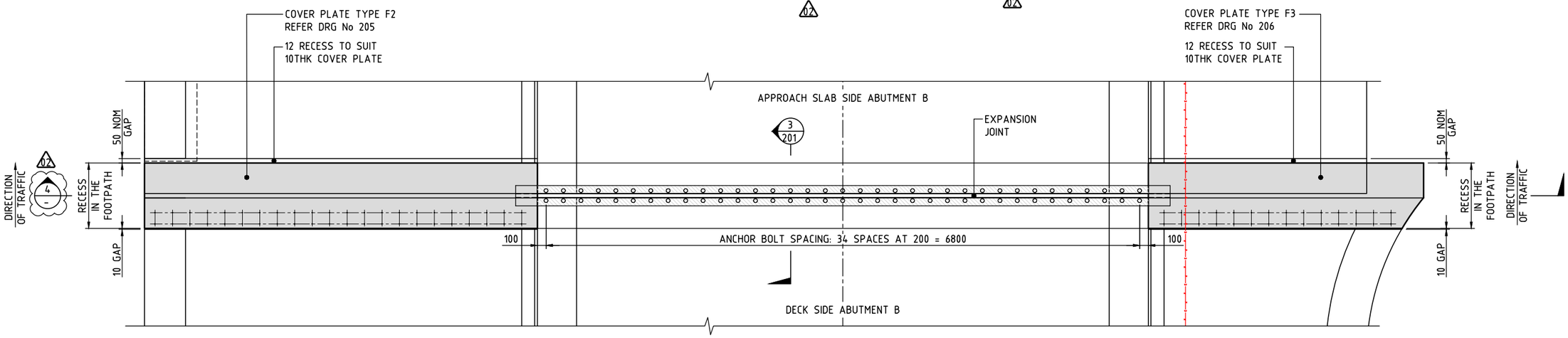

EXPANSION JOINT AT ABUTMENT B

SCALE 1:25

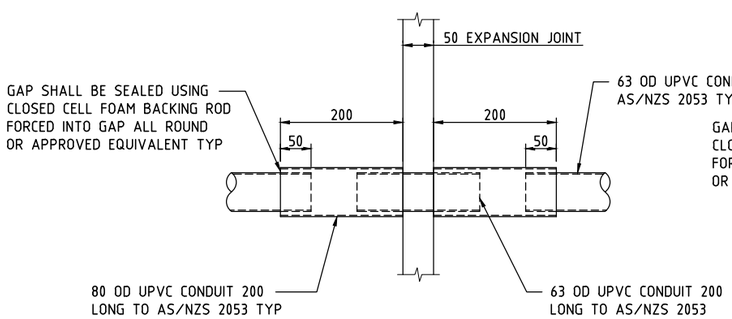

EXPANSION JOINT FOR Ø63 CONDUIT

SCALE 1:5

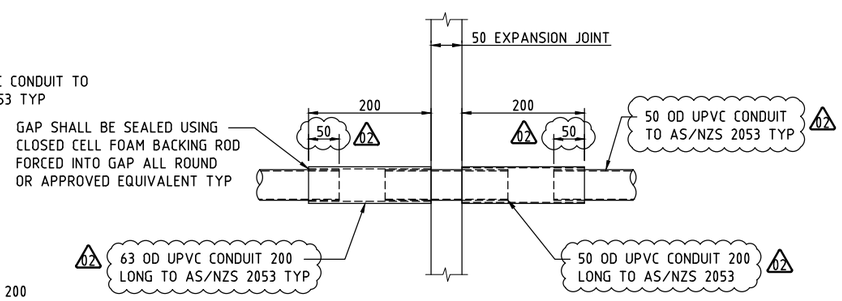

EXPANSION JOINT FOR Ø50 CONDUIT

SCALE 1:5

These plans are referred to in certificate no. **16746** approved by:
Eric Hausfeld
Registered Certifier
Registration No: BDC 2416
Categories: Certifier – Subdivision, Certifier – Strata, Certifier – Stormwater, Certifier – Road & Drainage, Certifier – Hydraulic (stormwater)
Land Development Certificates
www.LDC.com.au

02 **PROPOSED UTILITIES**

PROPOSED Ø63 ELECTRICAL LINE

GENERAL NOTES

FOR GENERAL NOTES RELATING TO THIS DRAWING, REFER DRG No 201.

DRAWING FILE LOCATION / NAME	PLOT DATE	TIME
V:_Vault\Projects\3001\30013046\110_CADD\CAD\DWG\30013046-202.dwg	14 Oct 2021	00:14:43

EXTERNAL REFERENCE FILES: X_30013046_SMEC_A1, X_DES_MAIN, X_BRG_PLAN

REV	DATE	AMENDMENT / REVISION DESCRIPTION	WVR No.	APPROVAL
01	20.08.2021	ISSUED FOR TENDER	001	JD
02	14.10.2021	ISSUED FOR TENDER	002	JD

TITLE	NAME
DRAFTER	T.SABAPATHI
DRAFTING CHECK	V.S.KODURU
DESIGNER	V.S.KODURU
DESIGN CHECK	V.BALAKRISHNAN
PROJECT MANAGER	J.DICKERSON
PROJECT DIRECTOR	K.LUU

SCALES AT A1 SIZE DRAWING: 0 250 125 500 1000mm 1:25

DESIGNER: SMEC
Member of the Surbana Jurong Group
© ABN 47 065 475 149
LEVEL 5, 20 BERRY STREET
NORTH SYDNEY NSW 2060
SMEC PROJECT No 30013046

CLIENT: FRASERS PROPERTY

PROJECT TITLE: SHRIMPTON CREEK BRIDGE

EXPANSION JOINT DETAILS SHEET B

SCALE	PHASE	PROJECT / DRAWING No.	REVISION
AS NOTED	TENDER	30013046-202	02

150 mm ON ORIGINAL
A1

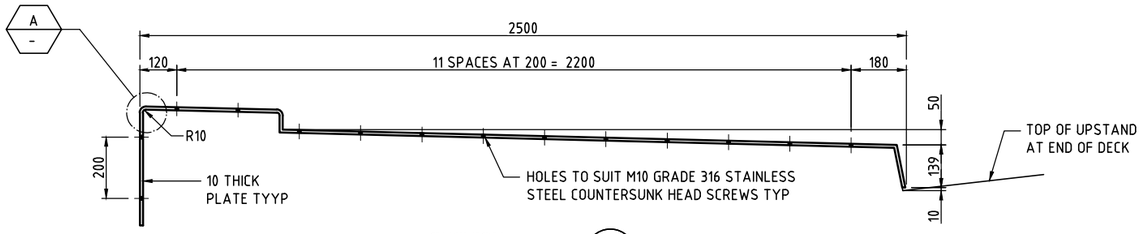

SECTION 1 / -
SCALE 1:10

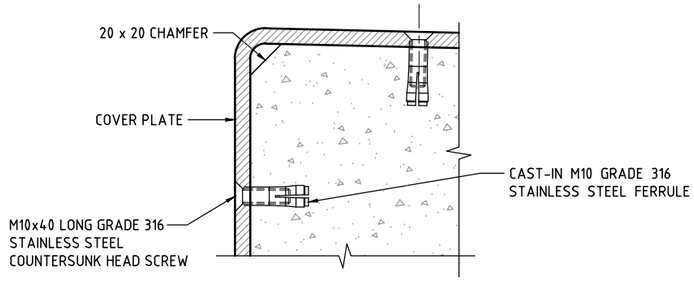

DETAIL A - / B 206 SIMILAR BUT TO OPPOSITE HAND
SCALE 1:2

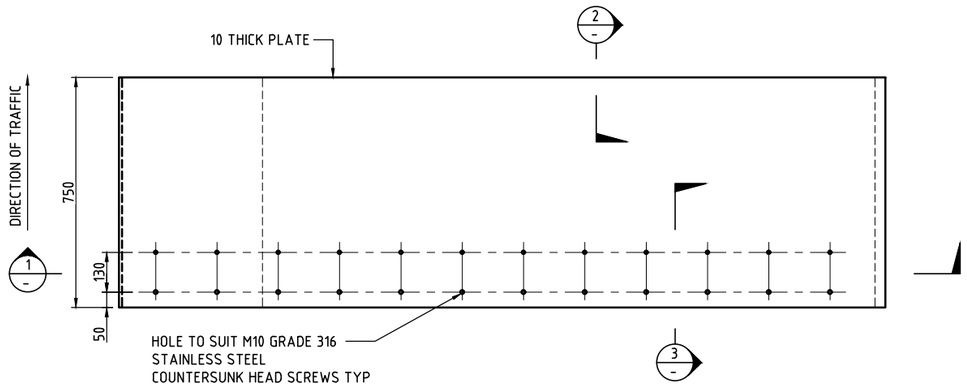

PLAN
COVER PLATE TYPE F1
2 No REQUIRED

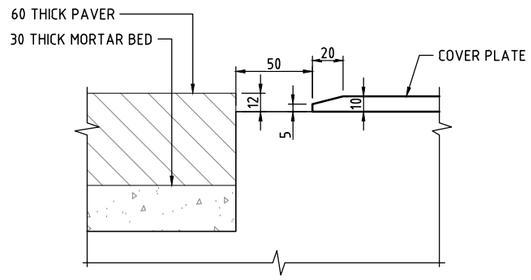

SECTION 2 / - 5 / 206
SCALE 1:10

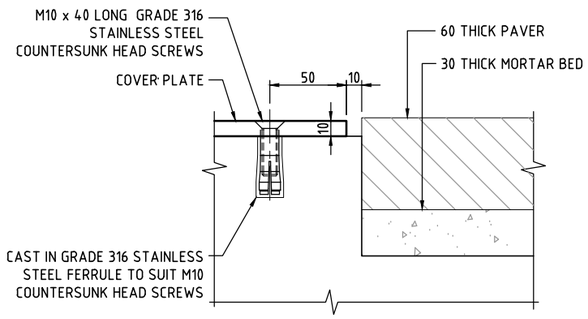

SECTION 3 / - 6 / 206
SCALE 1:10

These plans are referred to in certificate no: **16746** approved by:
Eric Hausfeld
Registered Certifier
Registration No: BDC 2416
Categories: Certifier – Subdivision, Certifier – Strata, Certifier – Stormwater, Certifier – Road & Drainage, Certifier – Hydraulic (stormwater)
Land Development Certificates
www.LDC.com.au

GENERAL NOTES

FOR GENERAL NOTES RELATED TO THIS DRAWING, REFER DRG No 201.

DRAWING FILE LOCATION / NAME	PLOT DATE	TIME
V:_Vault\Projects\3001\30013046\110_CADD\CAD\DWG\30013046-205.dwg	14 Oct 2021	00:14:31

EXTERNAL REFERENCE FILES: X_30013046_SMEC_A1

REV	DATE	AMENDMENT / REVISION DESCRIPTION	WVR No.	APPROVAL
01	10.07.2021	ISSUED FOR TENDER	001	JD
02	20.08.2021	ISSUED FOR TENDER	001	JD

TITLE	NAME
DRAFTER	T.SABAPATHI
DRAFTING CHECK	V.S.KODURU
DESIGNER	V.S.KODURU
DESIGN CHECK	V.BALAKRISHNAN
PROJECT MANAGER	J.DICKERSON
PROJECT DIRECTOR	K.LUU

SCALES AT A1 SIZE DRAWING: 0 100 200 300 400 500mm; 100 50; 1:10

DESIGNER: SMEC
Member of the Surbana Jurong Group
© ABN 47 065 475 149
LEVEL 5, 20 BERRY STREET
NORTH SYDNEY NSW 2060
SMEC PROJECT No 30013046

CLIENT: FRASERS PROPERTY

PROJECT TITLE: SHRIMPTON CREEK BRIDGE

COVER PLATE DETAILS
SHEET A

SCALE	PHASE	PROJECT / DRAWING No.	REVISION
AS NOTED	TENDER	30013046-205	02

150 mm ON ORIGINAL
A1

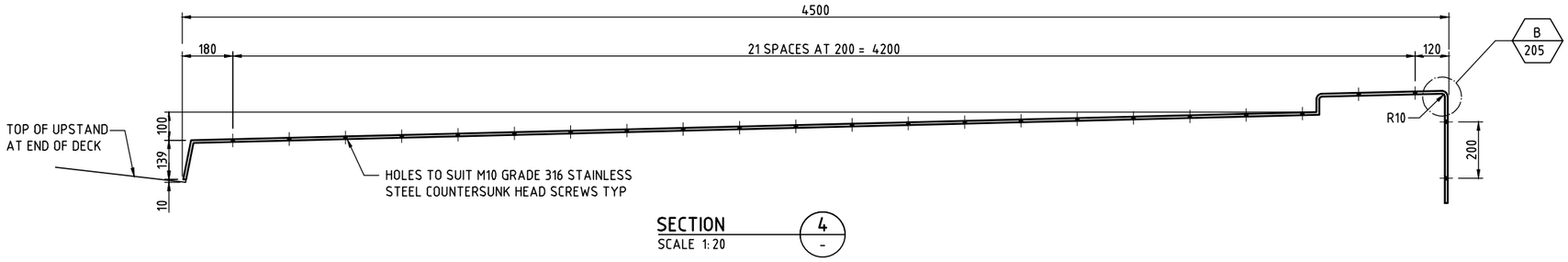

SECTION 4 / -
SCALE 1:20

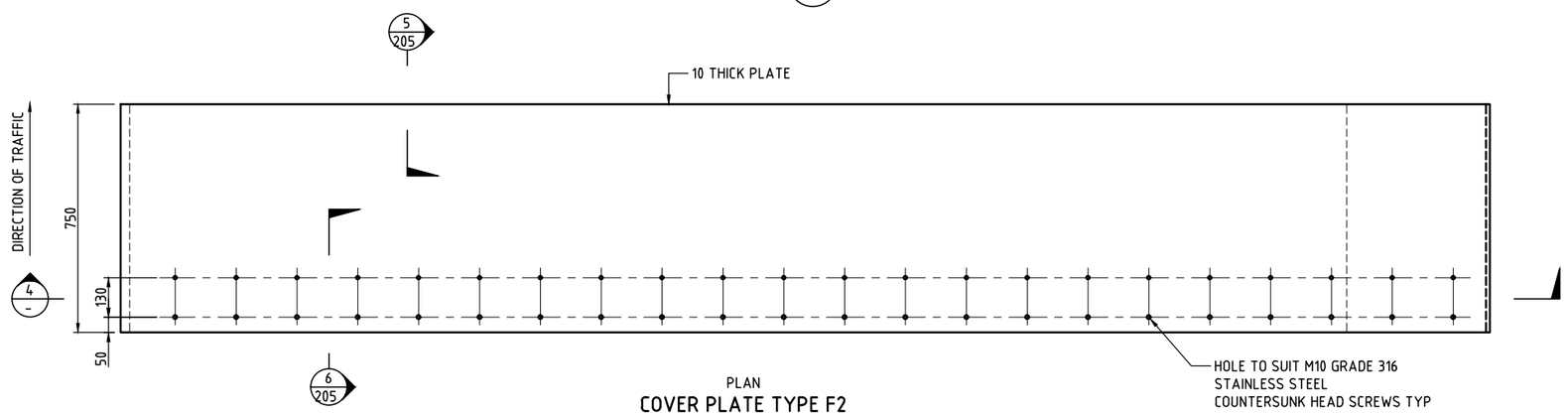

PLAN
COVER PLATE TYPE F2
2 No REQUIRED

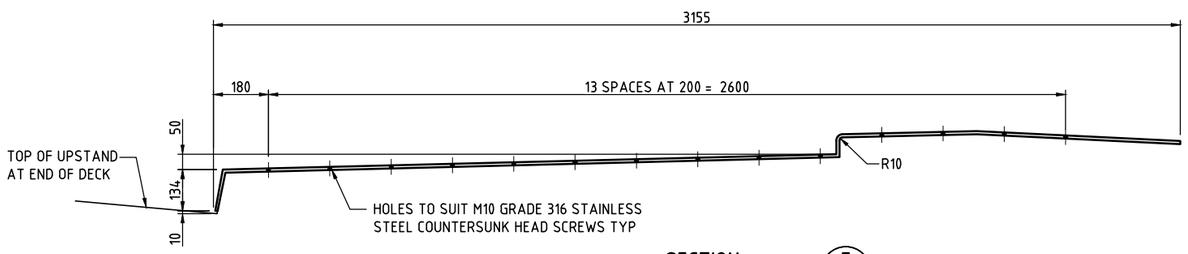

SECTION 7 / -
SCALE 1:20

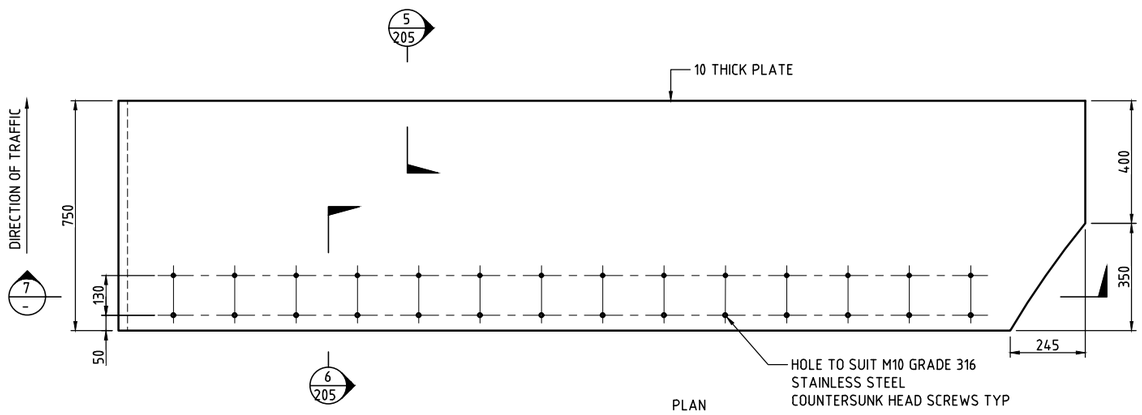

PLAN
COVER PLATE TYPE F3
2 No REQUIRED

These plans are referred to in certificate no. **16746** approved by:
Eric Hausfeld
Registered Certifier
Registration No: BDC 2416
Categories: Certifier – Subdivision, Certifier – Strata, Certifier – Stormwater, Certifier – Road & Drainage, Certifier – Hydraulic (stormwater)
Land Development Certificates
www.LDC.com.au

GENERAL NOTES

FOR GENERAL NOTES RELATED TO THIS DRAWING, REFER DRG No 201.

DRAWING FILE LOCATION / NAME	PLOT DATE	TIME
V:_Vault\Projects\3001\30013046\110_CADD\CAD\DWG\30013046-206.dwg	14 Oct 2021	00:25:01

EXTERNAL REFERENCE FILES: X_30013046_SMEC_A1

REV	DATE	AMENDMENT / REVISION DESCRIPTION	WVR No.	APPROVAL
01	10.07.2021	ISSUED FOR TENDER	001	JD
02	20.08.2021	ISSUED FOR TENDER	001	JD

TITLE	NAME
DRAFTER	T.SABAPATHI
DRAFTING CHECK	V.S.KODURU
DESIGNER	V.S.KODURU
DESIGN CHECK	V.BALAKRISHNAN
PROJECT MANAGER	J.DICKERSON
PROJECT DIRECTOR	K.LUU

SCALES AT A1 SIZE DRAWING: 0 100 200 300 400 500mm; 100 50; 1:10

DESIGNER: SMEC
Member of the Surbana Jurong Group
© ABN 47 065 475 149
LEVEL 5, 20 BERRY STREET
NORTH SYDNEY NSW 2060
SMEC PROJECT No 30013046

CLIENT: FRASERS PROPERTY

PROJECT TITLE: SHRIMPTON CREEK BRIDGE

COVER PLATE DETAILS
SHEET B

SCALE	PHASE	PROJECT / DRAWING No.	REVISION
AS NOTED	TENDER	30013046-206	02

150 mm ON ORIGINAL
A1

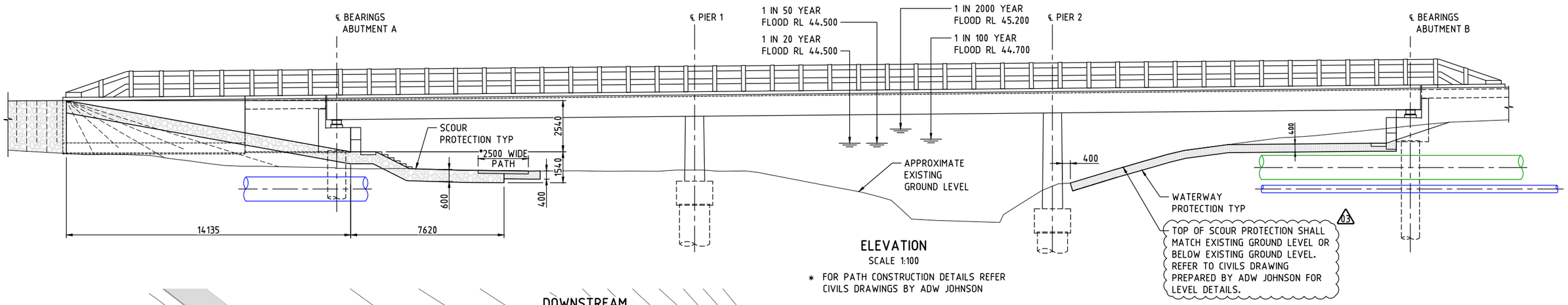

ELEVATION

SCALE 1:100

* FOR PATH CONSTRUCTION DETAILS REFER CIVILS DRAWINGS BY ADW JOHNSON

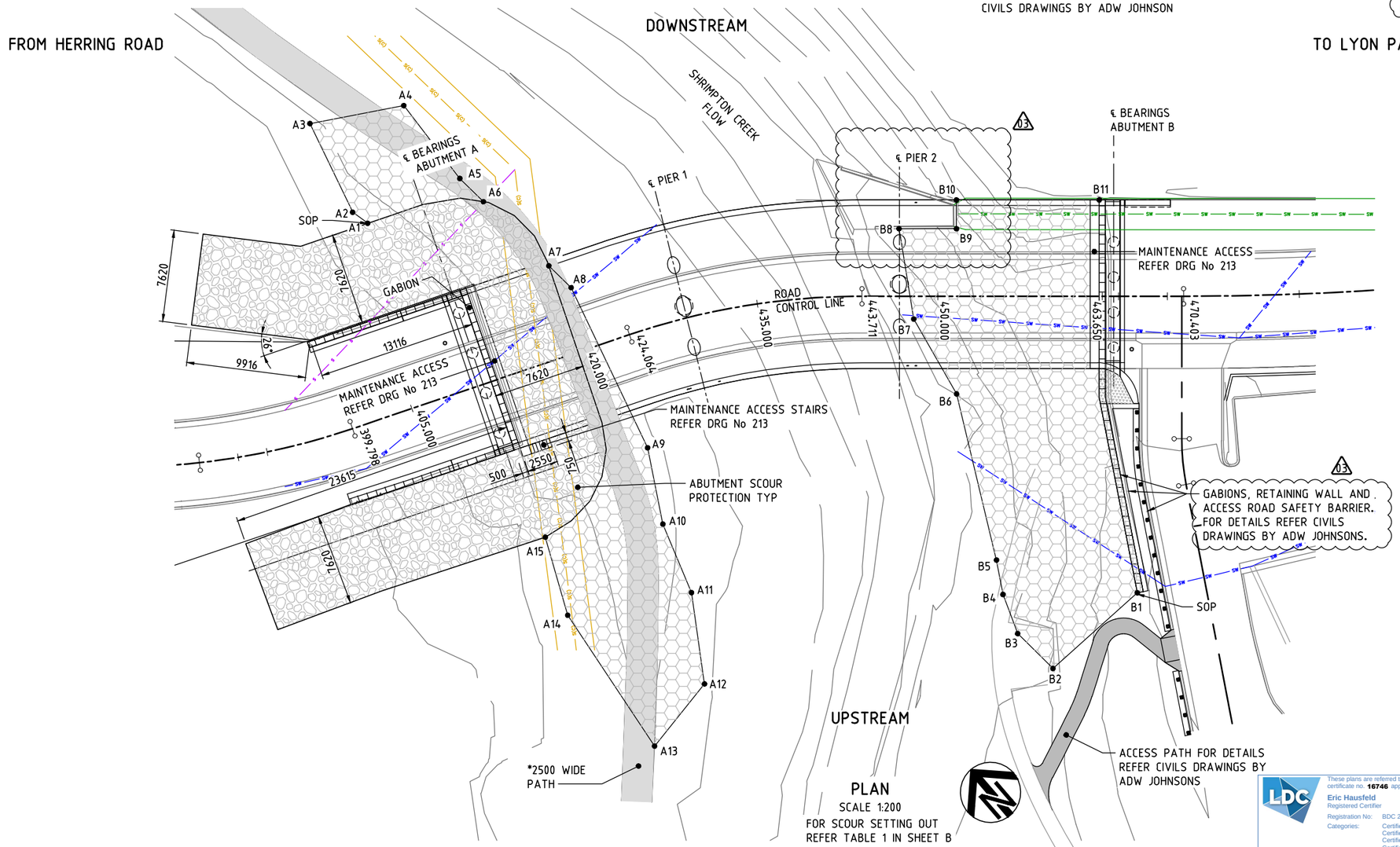

PLAN

SCALE 1:200

FOR SCOUR SETTING OUT REFER TABLE 1 IN SHEET B

LEGEND

SLOPE PROTECTION

WATERWAY PROTECTION

PROPOSED UTILITIES

SW — PROPOSED STORMWATER

S — PROPOSED SEWER LINE

EXISTING SERVICES TO REMAIN

SW — UNDERGROUND STORMWATER PIPE (QL D)

S(C) — UNDERGROUND SEWER (QL C)

SCOUR PROTECTION NOTES

ALL DIMENSIONS ARE IN MILLIMETRES UNLESS NOTED OTHERWISE.
THE THICKNESS OF THE ROCKFILL PROTECTION SHALL BE 600 FOR ABUTMENT SCOUR PROTECTION AND THE THICKNESS OF THE ROCKFILL PROTECTION FOR WATERWAY SHALL BE 400.
THE STONE SHALL BE REASONABLY WELL GRADED THROUGHOUT THE ROCKFILL LAYER. STONE SIZES SHALL BE DEPENDANT ON THE D50 VALUE SPECIFIED.
ROCK IS TO BE HARD, DENSE, DURABLE, RESISTANT TO WEATHERING AND ANGULAR IN SHAPE. IT SHALL BE FREE FROM OVERBURDEN, SPOIL, SHALE AND ORGANIC MATTER. ROCK THAT IS LAMINATED, FRACTURED, POROUS OR OTHERWISE PHYSICALLY WEAK WILL BE UNACCEPTABLE.
AN APPROXIMATE GUIDE TO STONE SHAPE IS THAT THE BREADTH OR THICKNESS OF A SINGLE STONE SHOULD BE NOT LESS THAN ONE-THIRD ITS LENGTH.
GEOFABRIC UNDER PLACED ROCKFILL TO BE BIDIM A49 BY GEOFABRICS OR EQUIVALENT UNLESS NOTED OTHERWISE.
GEOTEXTILE UNDERLAYER SHALL BE IN ACCORDANCE WITH TfNSW D&C QA SPECIFICATION R63.
PLACEMENT OF ROCK SHALL NOT DAMAGE THE GEOTEXTILE UNDERLAYER
SCOUR PROTECTION SHALL BE CONSTRUCTED IN ACCORDANCE WITH DETAILS AS INDICATED ON THESE DRAWINGS.
TOP OF ALL ROCKFILL PROTECTION MUST BE FLUSH WITH EXISTING GROUND SURFACE.
FOR DETAILS OF SCOUR AND WATERWAY INTERFACE WITH EXISTING AND NEW SERVICES REFER CIVILS DRAWING BY ADW JOHNSON.

These plans are referred to in certificate no. **16746** approved by:
Eric Hausfeld
Registered Certifier
Registration No: BDC 2416
Categories: Certifier – Subdivision, Certifier – Strata, Certifier – Stormwater, Certifier – Road & Drainage, Certifier – Hydraulic (stormwater)
Land Development Certificates
www.LDC.com.au

DRAWING FILE LOCATION / NAME: V:_Vault\Projects\3001\30013046\110_CADD\CAD\DWG\30013046-211.dwg

PLOT DATE: 14 Oct 2021 TIME: 00:34:50

EXTERNAL REFERENCE FILES: X_30013046_SMEC_A1, X_DES_MAIN, X_SURV, X_BRG_PLAN, X_BRG_SCOUR PROTECTION, X_PROP_SERVICES

REV	DATE	AMENDMENT / REVISION DESCRIPTION	WVR No.	APPROVAL
01	10.07.2021	ISSUED FOR TENDER	001	JD
02	20.08.2021	ISSUED FOR TENDER	001	JD
03	14.10.2021	ISSUED FOR TENDER	002	JD

TITLE	NAME
DRAFTER	T.SABAPATHI
DRAFTING CHECK	V.S.KODURU
DESIGNER	V.S.KODURU
DESIGN CHECK	V.BALAKRISHNAN
PROJECT MANAGER	J.DICKERSON
PROJECT DIRECTOR	K.LUU

SCALES AT A1 SIZE DRAWING: SCALE 1:100 (1 0 1 2 3 4 5)

DESIGNER: SMEC — Member of the Surbana Jurong Group © ABN 47 065 475 149, LEVEL 5, 20 BERRY STREET, NORTH SYDNEY NSW 2060, SMEC PROJECT No 30013046

CLIENT: FRASERS PROPERTY

PROJECT TITLE: SHRIMPTON CREEK BRIDGE

SCOUR PROTECTION DETAILS SHEET A

SCALE	PHASE	PROJECT / DRAWING No.	REVISION
AS NOTED	TENDER	30013046-211	03

150 mm ON ORIGINAL

A1

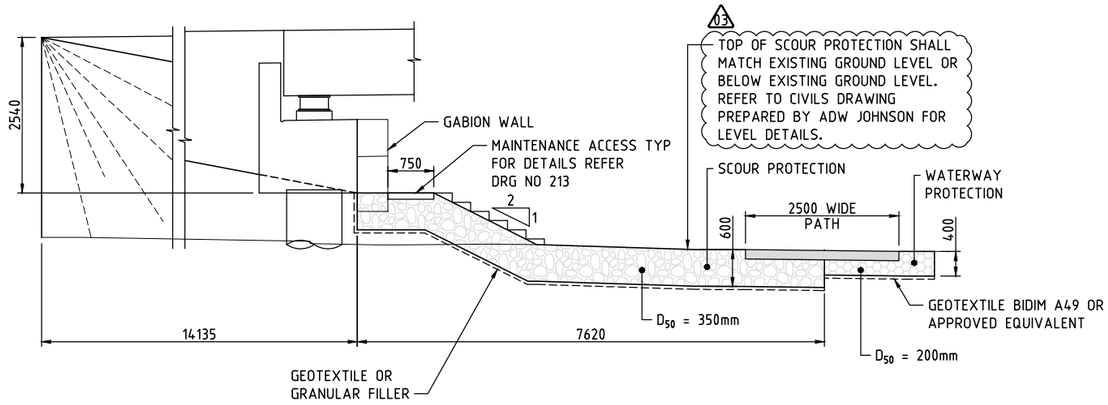

ABUTMENT A SCOUR PROTECTION

SCALE 1:50

TABLE 1 - SCOUR SETTING OUT		
LOCATION	NORTHING	EASTING
A1	325765.888	6260352.589
A2	325765.533	6260354.104
A3	325767.644	6260362.002
A4	325774.521	6260358.053
A5	325774.092	6260350.435
A6	325774.321	6260347.700
A7	325774.955	6260340.130
A8	325775.172	6260337.537
A9	325771.305	6260323.330
A10	325768.130	6260317.712
A11	325766.217	6260311.843
A12	325762.086	6260305.404
A13	325755.580	6260304.194
A14	325757.213	6260317.132
A15	325760.033	6260323.247
B1	325794.236	6260287.686
B2	325784.836	6260287.498
B3	325784.506	6260291.597
B4	325785.702	6260294.856
B5	325787.153	6260297.376
B6	325793.651	6260309.983
B7	325795.020	6260317.012
B8	325798.980	6260323.488
B9	325802.593	6260320.383
B10	325804.152	6260322.192
B11	325813.131	6260314.454

03

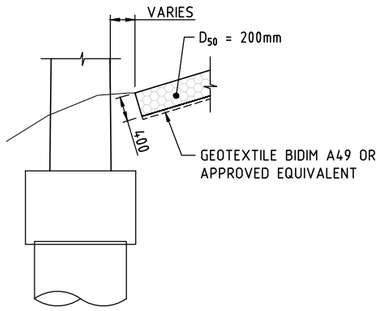

WATERWAY PROTECTION AT PIER 2

SCALE 1:50

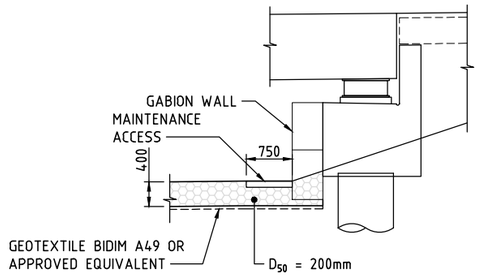

WATERWAY PROTECTION AT ABUTMENT B

SCALE 1:50

These plans are referred to in certificate no. **16746** approved by:
Eric Hausfeld
Registered Certifier
Registration No: BDC 2416
Categories: Certifier – Subdivision, Certifier – Strata, Certifier – Stormwater, Certifier – Road & Drainage, Certifier – Hydraulic (stormwater)
Land Development Certificates
www.LDC.com.au

GENERAL NOTES

FOR GENERAL NOTES RELATED TO THIS DRAWING, REFER DRG No 211.

DRAWING FILE LOCATION / NAME	PLOT DATE	TIME
V:_Vault\Projects\3001\30013046\110_CADD\CAD\DWG\30013046-212.dwg	13 Oct 2021	22:49:39

EXTERNAL REFERENCE FILES: X_30013046_SMEC_A1

REV	DATE	AMENDMENT / REVISION DESCRIPTION	WVR No.	APPROVAL
01	10.07.2021	ISSUED FOR TENDER	001	JD
02	20.08.2021	ISSUED FOR TENDER	001	JD
03	14.10.2021	ISSUED FOR TENDER	002	JD

TITLE	NAME
DRAFTER	T.SABAPATHI
DRAFTING CHECK	V.S.KODURU
DESIGNER	V.S.KODURU
DESIGN CHECK	V.BALAKRISHNAN
PROJECT MANAGER	J.DICKERSON
PROJECT DIRECTOR	K.LUU

SCALES AT A1 SIZE DRAWING: 0 1000 2000mm; 500 250 1:50

DESIGNER: SMEC
Member of the Surbana Jurong Group
© ABN 47 065 475 149
LEVEL 5, 20 BERRY STREET
NORTH SYDNEY NSW 2060
SMEC PROJECT No 30013046

CLIENT: FRASERS PROPERTY

PROJECT TITLE: SHRIMPTON CREEK BRIDGE

SCOUR PROTECTION DETAILS SHEET B

SCALE	PHASE	PROJECT / DRAWING No.	REVISION
AS NOTED	TENDER	30013046-212	03

150 mm ON ORIGINAL
A1

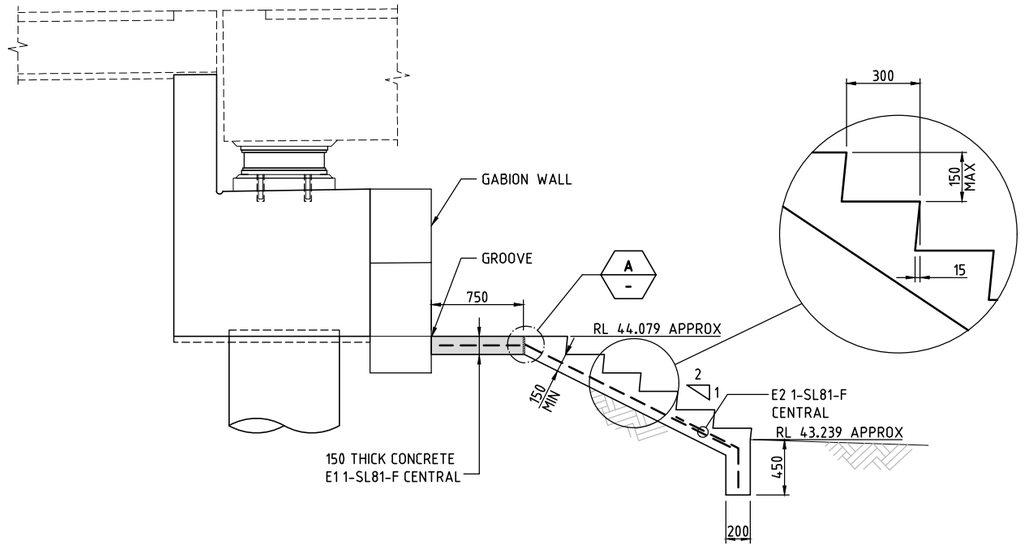

MAINTENANCE STAIRS AND ACCESS
PATH DETAIL AT ABUTMENT A
SCALE 1:25

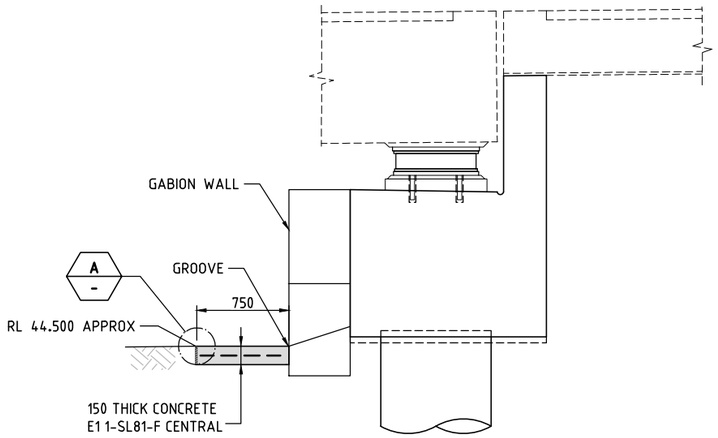

MAINTENANCE ACCESS PATH DETAIL
AT ABUTMENT B
SCALE 1:25

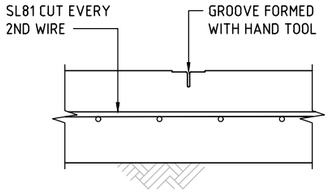

TOOLED JOINT(TJ)
AT MAX 2500 CENTRES IN
MAINTENANCE ACCESS WALKWAYS
SCALE 1:5

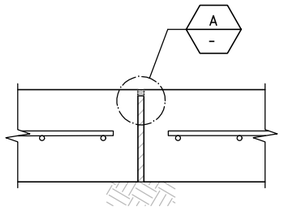

EXPANSION JOINT (EJ)
AT MAX 7500 CENTRES IN
MAINTENANCE ACCESS WALKWAYS
SCALE 1:5

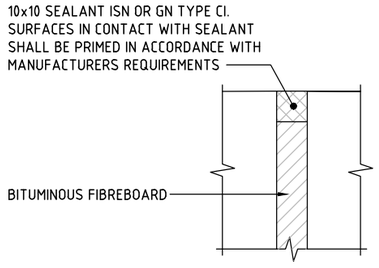

DETAIL A
SCALE 1:1

GENERAL NOTES

ALL DIMENSIONS ARE IN MILLIMETRES UNLESS NOTED OTHERWISE.
CONCRETE EXPOSURE CLASSIFICATION B1.
MINIMUM 28 DAY COMPRESSIVE STRENGTH OF CONCRETE SHALL BE 32MPa.
MINIMUM 28 DAY COMPRESSIVE STRENGTH OF MASS CONCRETE SHALL BE 20MPa UNO.
NOMINAL COVER TO REINFORCEMENT NEAREST TO THE CONCRETE SURFACE SHALL BE 50mm OR 80mm IF CAST AGAINST GROUND UNLESS SPECIFIED OTHERWISE.
REINFORCEMENT FABRIC LAPPED SPLICE SHALL BE AS FOLLOWS :

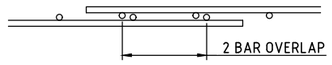

MAINTENANCE ACCESS STEPS AND BENCH SHALL HAVE A ROUGHENED SURFACE AS PER SPECIFICATION .
ALL SEALANTS SHALL CONFORM TO TfNSW QA SPECIFICATION B312.
BACKING RODS SHALL BE NON-ABSORBENT, CLOSED CELL POLYSTYRENE OR NEOPRENE (PARBURY'S EXPANDFORM BACKER ROD OR APPROVED EQUIVALENT) INSTALLED WITH 25% COMPRESSION.
SEALANTS SHALL BE APPLIED AS PER MATERIAL SPECIFICATION REQUIREMENTS.
BLINDING CONCRETE CAN BE POURED TOGETHER WITH THE MAINTENANCE ACCESS BENCH AS LONG AS THE CONCRETE STRENGTH IS THE SAME AS THE MAINTENANCE ACCESS BENCH.

These plans are referred to in certificate no. **16746** approved by:
Eric Hausfeld
Registered Certifier
Registration No: BDC 2416
Categories: Certifier – Subdivision, Certifier – Strata, Certifier – Stormwater, Certifier – Road & Drainage, Certifier – Hydraulic (stormwater)
Land Development Certificates
www.LDC.com.au

DRAWING FILE LOCATION / NAME	PLOT DATE	TIME
V:_Vault\Projects\3001\30013046\110_CADD\CAD\DWG\30013046-213.dwg	14 Oct 2021	00:31:47

EXTERNAL REFERENCE FILES	REV	DATE	AMENDMENT / REVISION DESCRIPTION	WVR No.	APPROVAL
	01	20.08.2021	ISSUED FOR TENDER	001	JD

TITLE	NAME
DRAFTER	T.SABAPATHI
DRAFTING CHECK	V.S.KODURU
DESIGNER	V.S.KODURU
DESIGN CHECK	V.BALAKRISHNAN
PROJECT MANAGER	J.DICKERSON
PROJECT DIRECTOR	K.LUU

SCALES AT A1 SIZE DRAWING: 0 1000 2000mm; 500 250; 1:50

DESIGNER: SMEC
Member of the Surbana Jurong Group
© ABN 47 065 475 149
LEVEL 5, 20 BERRY STREET
NORTH SYDNEY NSW 2060
SMEC PROJECT No 30013046

CLIENT: FRASERS PROPERTY

PROJECT TITLE: SHRIMPTON CREEK BRIDGE
MAINTENANCE ACCESS

SCALE	PHASE	PROJECT / DRAWING No.	REVISION
AS NOTED	TENDER	30013046-213	01

150 mm ON ORIGINAL
A1
X_30013046_SMEC_A1

SHAPE CODE	AUSTRALIAN STANDARD SHAPE	SHAPE CODE	AUSTRALIAN STANDARD SHAPE	SHAPE CODE	AUSTRALIAN STANDARD SHAPE	SHAPE CODE	AUSTRALIAN STANDARD SHAPE
S	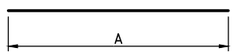	LL	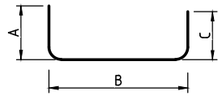	VL	FITMENT BENDS 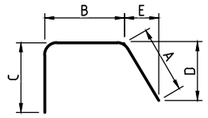	H	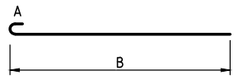
SH	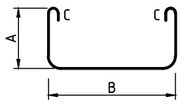	XT	FITMENT BENDS 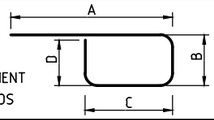	HH	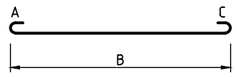	VV	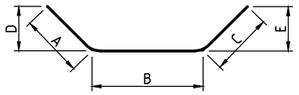
CT	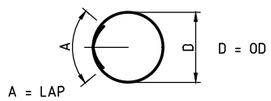 A = LAP D = OD	V	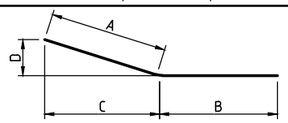	J	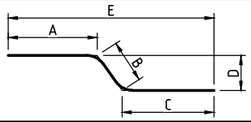	HT	FITMENT HOOKS 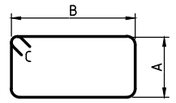
L	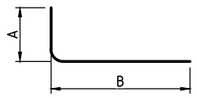	JJ	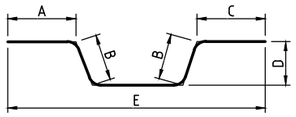	R	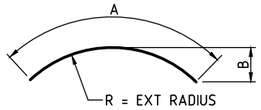 R = EXT RADIUS	LH	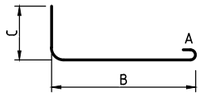
SP	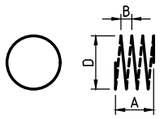	RC	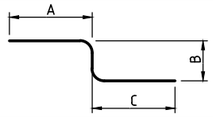	U	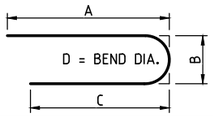 D = BEND DIA.	F	'A' IS IN THE DIRECTION OF THE MAIN BARS 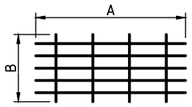
T	FITMENT BENDS 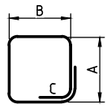	A	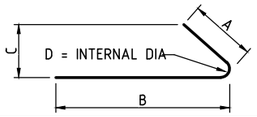 D = INTERNAL DIA	CC	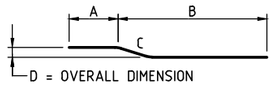 D = OVERALL DIMENSION		

SHAPE CODE	NON STANDARD SHAPE	SHAPE CODE	NON STANDARD SHAPE
AZ	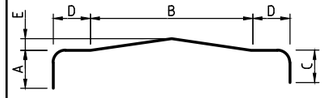	EZ	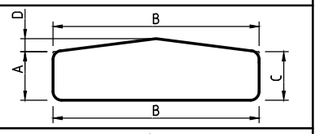
BZ	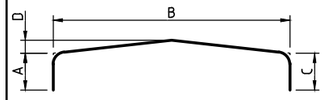	FZ	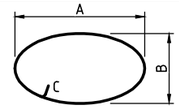
CZ	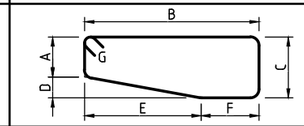	GZ	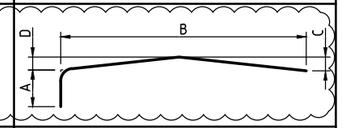
DZ	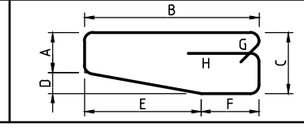	LZ	03

SHAPE CODE	ROADS AND MARITIME SERVICES STANDARD SHAPE	SHAPE CODE	ROADS AND MARITIME SERVICES STANDARD SHAPE	SHAPE CODE	ROADS AND MARITIME SERVICES STANDARD SHAPE	SHAPE CODE	ROADS AND MARITIME SERVICES STANDARD SHAPE
LF	FITMENT BENDS 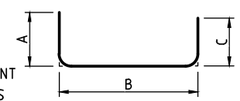	AV	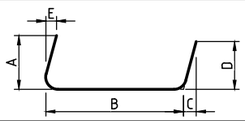	TT	FITMENT BENDS AND HOOKS 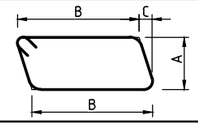	XH	FITMENT BENDS AND HOOK 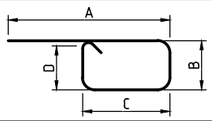
LA	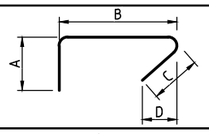	LG	FITMENT BENDS 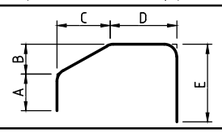	PT	FITMENT BENDS AND HOOKS 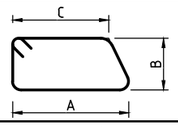	ST	FITMENT HOOKS 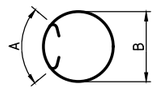
AA	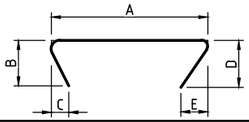	KH	FITMENT BENDS 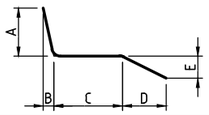	QT	FITMENT BENDS AND HOOKS 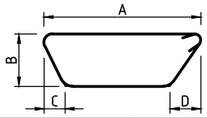	VS	FITMENT BENDS 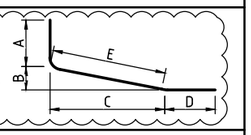 03
KL	FITMENT BENDS 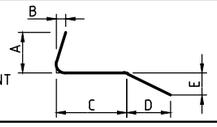	GT	FITMENT BENDS AND HOOKS 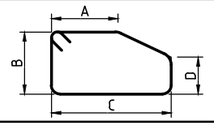	KF	FITMENT BENDS 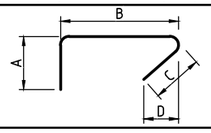	AF	FITMENT BENDS 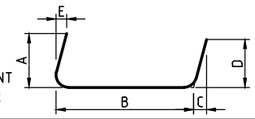

BAR MARKING LEGEND

THE METHOD USED TO DESCRIBE REINFORCEMENT ON THE DRAWINGS IS AS FOLLOWS:

A1 10-N16-S-300EF

- INFORMATION FOR PLACING
- SPACE ALONG LIMIT LINE
- BAR SHAPE CODE
- BAR SIZE IN MILLIMETRES
- BAR STRUCTURAL PROPERTIES
- NUMBER OF BARS IN THE SET
- BAR NUMBER IN SEQUENCE
- STRUCTURE ELEMENT DENOTATION

WHERE THE BAR SPACING IS APPROXIMATE ONLY, THE FOLLOWING FORMAT SHALL BE USED:

A1 10-N16-S-300EF APPROX

GENERAL NOTES

STRUCTURE ELEMENT DENOTATION:

A - FOR ABUTMENT A
B - FOR ABUTMENT B
C - FOR PIER COLUMNS
D - FOR DECK
E - FOR MAINTENANCE ACCESS
F - FOR FOUNDATION
G - FOR PRECAST GIRDERS
R - FOR RETAINING WALL
S - FOR APPROACH SLABS
W - FOR DEFECTION WALL

INFORMATION FOR PLACING:

NF - NEAR FACE
FF - FAR FACE
LV - LENGTH VARIES
EF - EACH FACE

REINFORCEMENT NOTES

AUSTRALIAN STANDARD BAR SHAPES ARE IN ACCORDANCE WITH AS 1100.501.
BAR SIZE IS THE NOMINAL DIAMETER IN MILLIMETRES, OR THE AS/NZS 4671 FABRIC NUMBER.
THE GRADE OF REINFORCEMENT, IF NOT STATED ON THE DRAWINGS, SHALL BE D500N TO AS/NZS 4671.
WHERE SHOWN ON THE DRAWINGS, "W" SHALL DENOTE PLAIN ROUND REINFORCING BARS EQUIVALENT TO GRADE R500L TO AS/NZS 4671.
WHERE SHOWN ON THE DRAWINGS, RL AND SL SHALL DENOTE WELDED REINFORCING FABRIC (RECTANGULAR AND SQUARE), RESPECTIVELY.
DIMENSIONS SHOWN ON BAR SHAPES DIAGRAMS ARE MEASURED FROM THE OUTSIDE FACES OF THE BARS AND ARE IN MILLIMETRES.
THE INCLUDED ANGLE OF ANY BEND SHALL BE A RIGHT ANGLE IF NO DIMENSION SHOWN.
BARS OF DIAMETER GREATER THAN 24mm SHALL NOT BE REBENT.
BAR BENDING AND HOOK DETAILS SHALL BE IN ACCORDANCE WITH SECTION 13 OF AS 5100.5.

These plans are referred to in certificate no. **16746** approved by:
Eric Hausfeld
Registered Certifier
Registration No: BDC 2416
Categories: Certifier – Subdivision, Certifier – Strata, Certifier – Stormwater, Certifier – Road & Drainage, Certifier – Hydraulic (stormwater)
Land Development Certificates
www.LDC.com.au

DRAWING FILE LOCATION / NAME: V:_Vault\Projects\3001\30013046\110_CADD\CAD\DWG\30013046-215.dwg
PLOT DATE: 14 Oct 2021 TIME: 00:31:40

EXTERNAL REFERENCE FILES: X_30013046_SMEC_A1

REV	DATE	AMENDMENT / REVISION DESCRIPTION	WVR No.	APPROVAL
01	10.07.2021	ISSUED FOR TENDER	001	JD
02	20.08.2021	ISSUED FOR TENDER	001	JD
03	14.10.2021	ISSUED FOR TENDER	002	JD

TITLE	NAME
DRAFTER	T.SABAPATHI
DRAFTING CHECK	V.S.KODURU
DESIGNER	V.S.KODURU
DESIGN CHECK	V.BALAKRISHNAN
PROJECT MANAGER	J.DICKERSON
PROJECT DIRECTOR	K.LUU

SCALES AT A1 SIZE DRAWING

DESIGNER: SMEC
Member of the Surbana Jurong Group
© ABN 47 065 475 149
LEVEL 5, 20 BERRY STREET
NORTH SYDNEY NSW 2060
SMEC PROJECT No 30013046

CLIENT: FRASERS PROPERTY

PROJECT TITLE: SHRIMPTON CREEK BRIDGE

BAR SHAPES DIAGRAMS

SCALE	PHASE	PROJECT / DRAWING No.	REVISION
AS NOTED	TENDER	30013046-215	03

150 mm ON ORIGINAL
A1

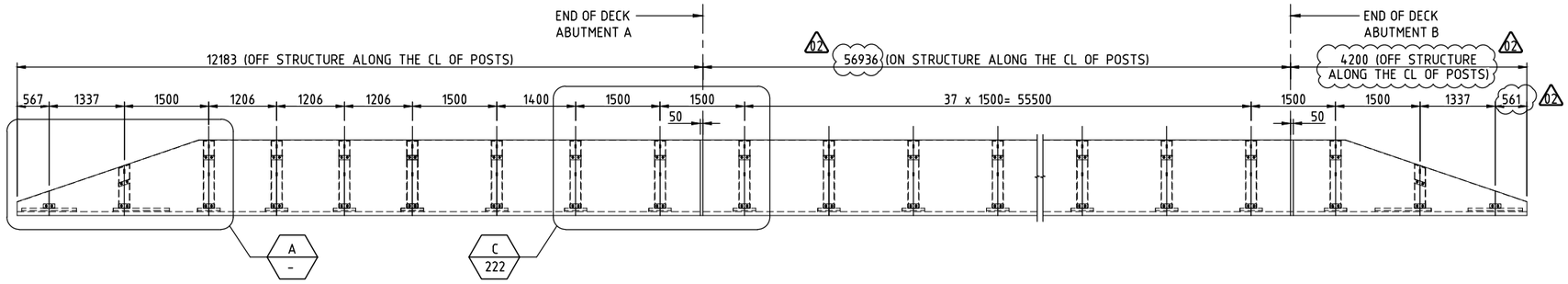

ELEVATION DOWNSTREAM SIDE (INSIDE)

SCALE 1:50

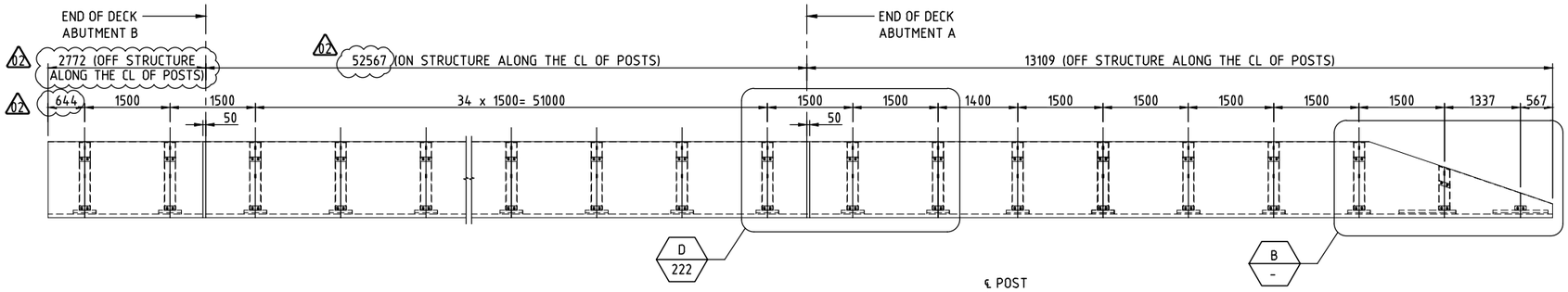

ELEVATION UPSTREAM SIDE (INSIDE)

SCALE 1:50

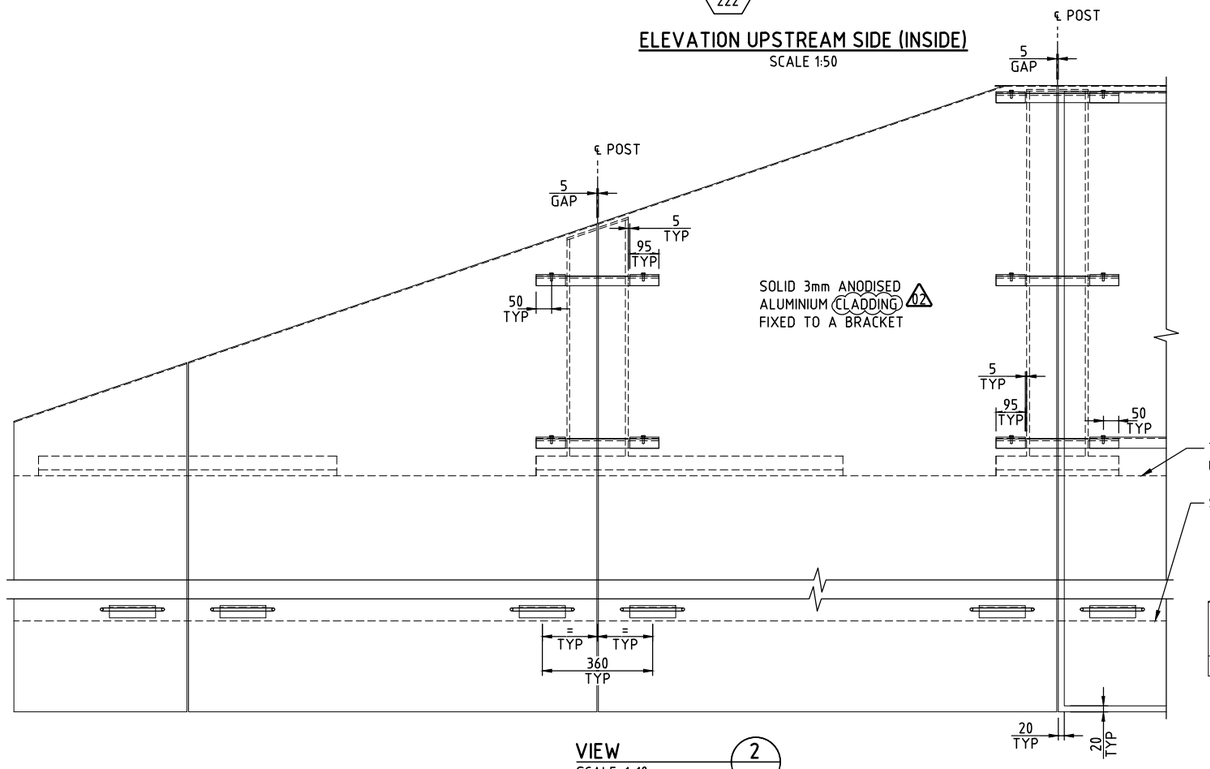

VIEW 2

SCALE 1:10

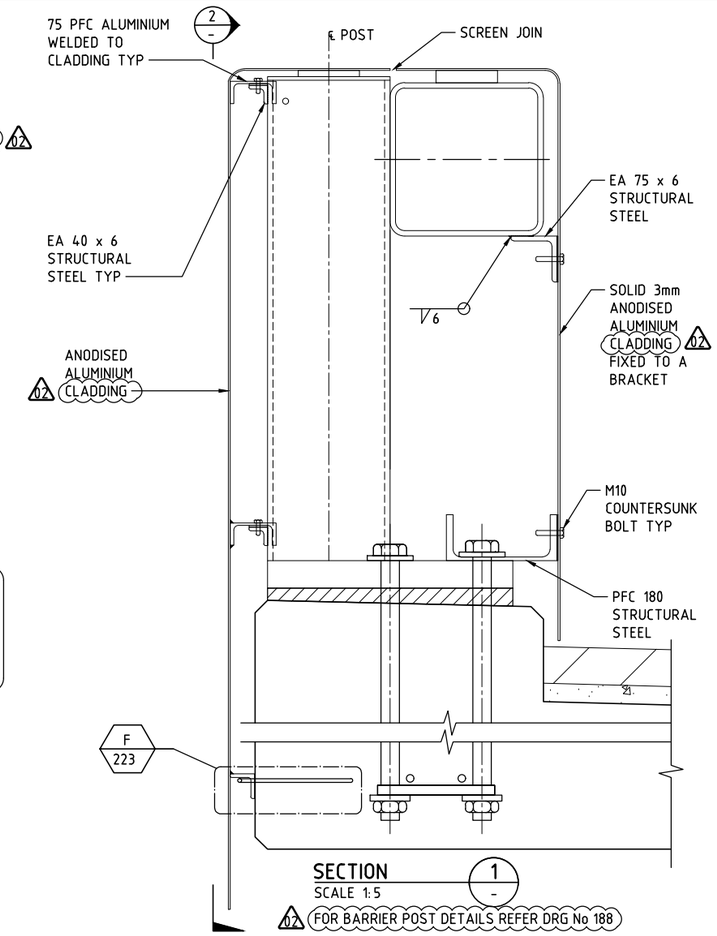

SECTION 1

SCALE 1:5

FOR BARRIER POST DETAILS REFER DRG No 188

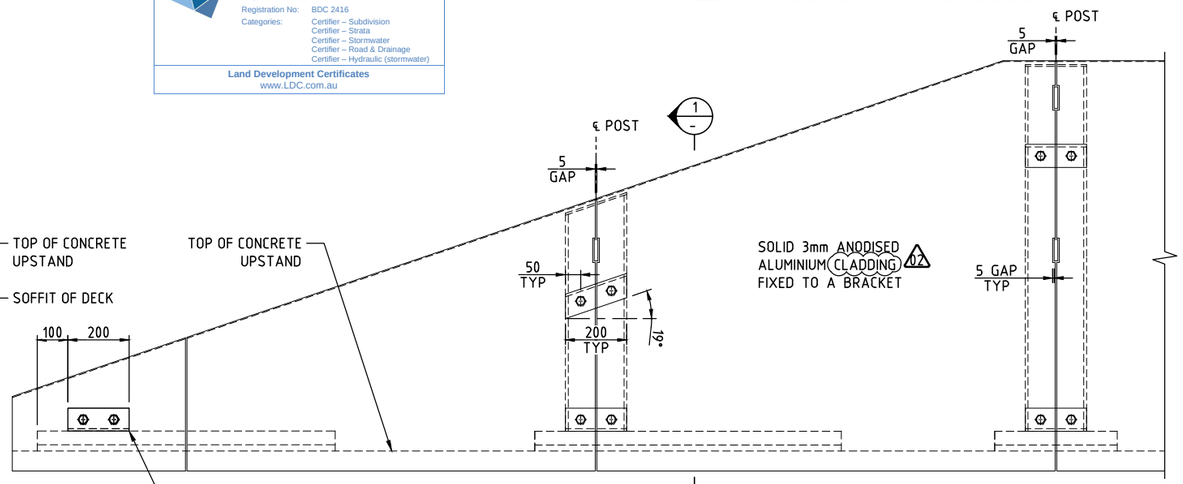

DETAIL A / B

SCALE 1:10

SIMILAR BUT TO OPPOSITE HAND

GENERAL NOTES

FOR ALL NOTES RELATED TO THIS DRAWING, REFER DRG No 223.

These plans are referred to in certificate no. **16746** approved by:
Eric Hausfeld
Registered Certifier
Registration No: BDC 2416
Categories: Certifier – Subdivision; Certifier – Strata; Certifier – Stormwater; Certifier – Road & Drainage; Certifier – Hydraulic (stormwater)
Land Development Certificates
www.LDC.com.au

DRAWING FILE LOCATION / NAME	PLOT DATE	TIME
V:_Vault\Projects\3001\30013046\110_CADD\CAD\DWG\30013046-221.dwg	14 Oct 2021	00:31:33

EXTERNAL REFERENCE FILES: X_30013046_SMEC_A1; X_BRG_SEC

REV	DATE	AMENDMENT / REVISION DESCRIPTION	WVR No.	APPROVAL
01	20.08.2021	ISSUED FOR TENDER	001	JD
02	14.10.2021	ISSUED FOR TENDER	002	JD

TITLE	NAME
DRAFTER	T.SABAPATHI
DRAFTING CHECK	V.S.KODURU
DESIGNER	V.S.KODURU
DESIGN CHECK	V.BALAKRISHNAN
PROJECT MANAGER	J.DICKERSON
PROJECT DIRECTOR	K.LUU

SCALES AT A1 SIZE DRAWING

DESIGNER: SMEC
Member of the Surbana Jurong Group
© ABN 47 065 475 149
LEVEL 5, 20 BERRY STREET
NORTH SYDNEY NSW 2060
SMEC PROJECT No 30013046

CLIENT: FRASERS PROPERTY

PROJECT TITLE: SHRIMPTON CREEK BRIDGE

CLADDING DETAILS
SHEET A

SCALE	PHASE	PROJECT / DRAWING No.	REVISION
AS NOTED	TENDER	30013046-221	02

150 mm ON ORIGINAL
A1

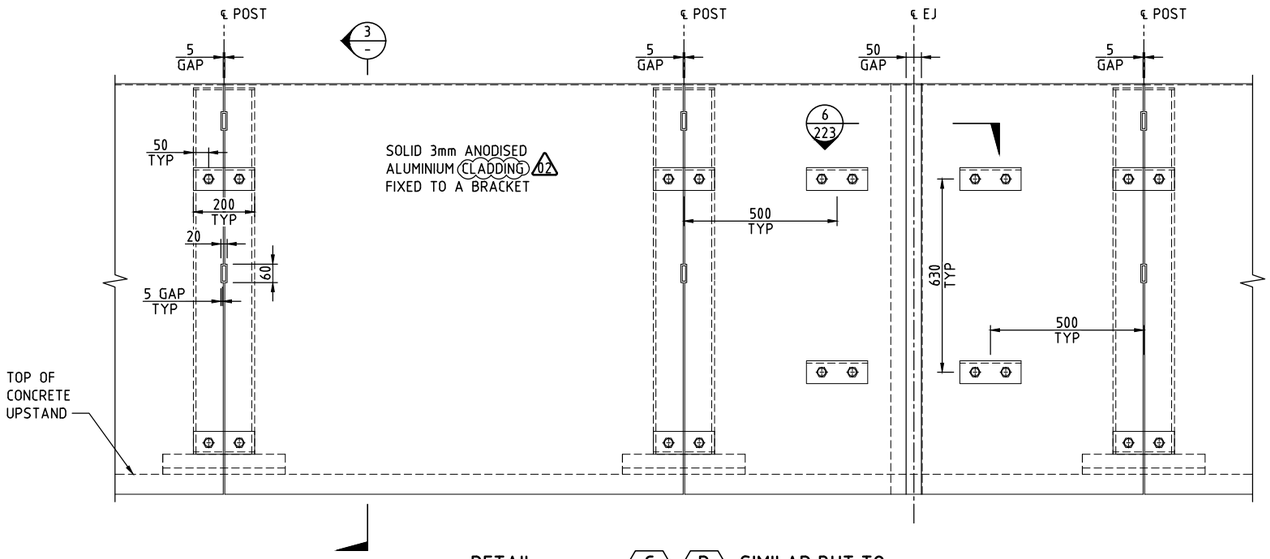

DETAIL C 221 D 221 SCALE 1:10 — SIMILAR BUT TO OPPOSITE HAND

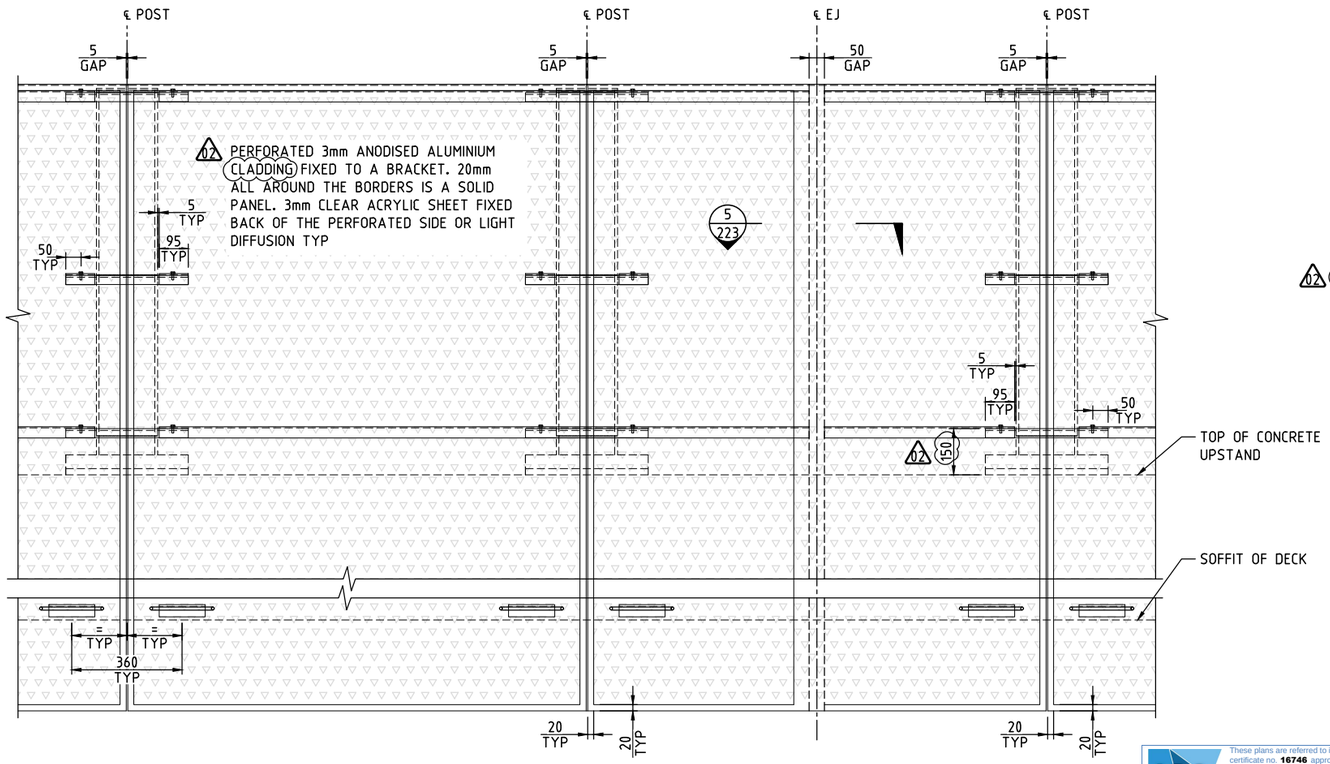

VIEW 4 SCALE 1:10

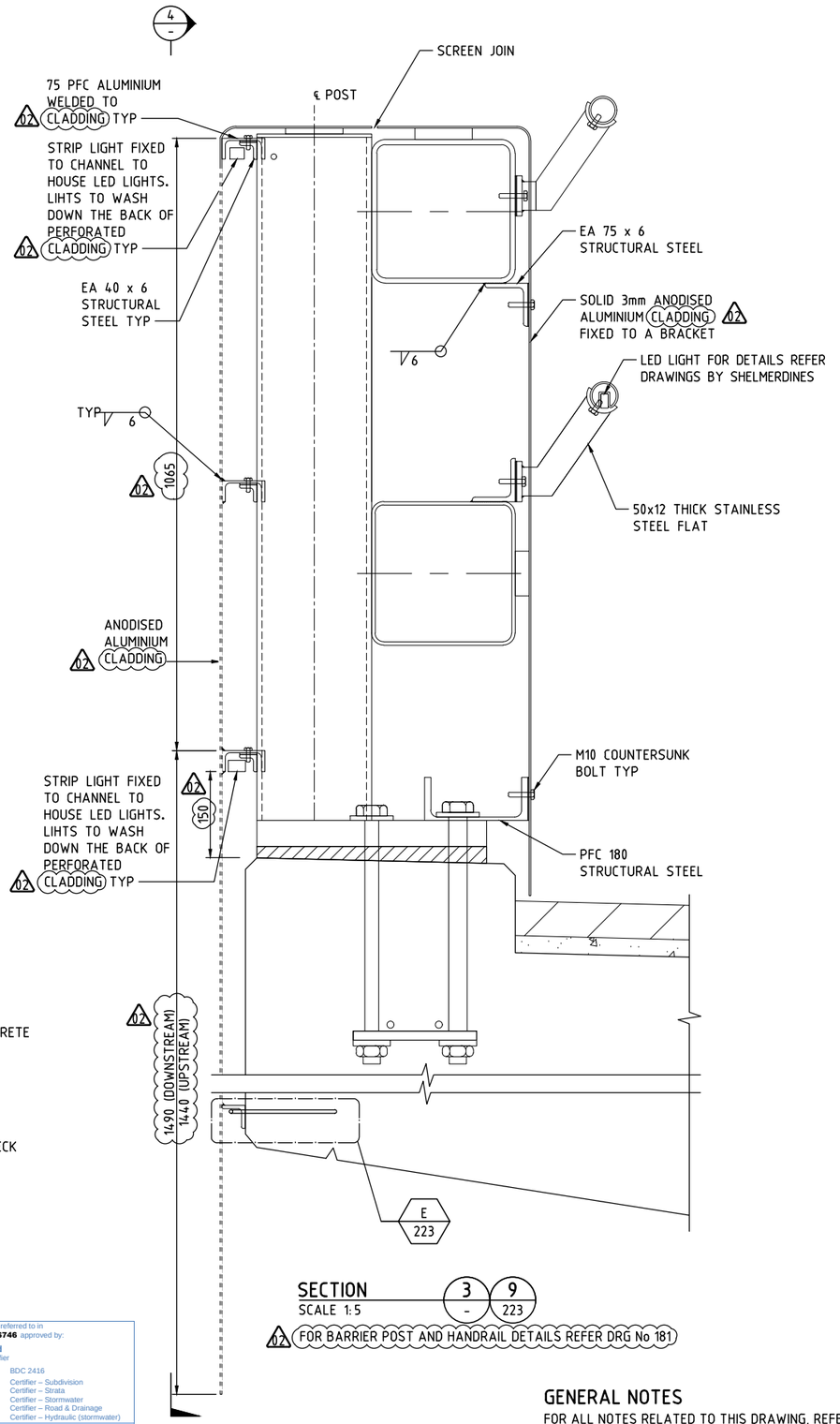

SECTION 3 - 9 223 SCALE 1:5

02 FOR BARRIER POST AND HANDRAIL DETAILS REFER DRG No 181

These plans are referred to in certificate no. **16746** approved by:
Eric Hausfeld
Registered Certifier
Registration No: BDC 2416
Categories: Certifier – Subdivision, Certifier – Strata, Certifier – Stormwater, Certifier – Road & Drainage, Certifier – Hydraulic (stormwater)
Land Development Certificates
www.LDC.com.au

GENERAL NOTES

FOR ALL NOTES RELATED TO THIS DRAWING, REFER DRG No 223.

DRAWING FILE LOCATION / NAME	PLOT DATE	TIME
V:_Vault\Projects\3001\30013046\110_CADD\CAD\DWG\30013046-222.dwg	14 Oct 2021	00:31:22

EXTERNAL REFERENCE FILES: X_30013046_SMEC_A1, X_BRG_SEC

REV	DATE	AMENDMENT / REVISION DESCRIPTION	WVR No.	APPROVAL
01	20.08.2021	ISSUED FOR TENDER	001	JD
02	14.10.2021	ISSUED FOR TENDER	002	JD

TITLE	NAME
DRAFTER	T.SABAPATHI
DRAFTING CHECK	V.S.KODURU
DESIGNER	V.S.KODURU
DESIGN CHECK	V.BALAKRISHNAN
PROJECT MANAGER	J.DICKERSON
PROJECT DIRECTOR	K.LUU

SCALES AT A1 SIZE DRAWING

DESIGNER: SMEC — Member of the Surbana Jurong Group © ABN 47 065 475 149, LEVEL 5, 20 BERRY STREET, NORTH SYDNEY NSW 2060, SMEC PROJECT No 30013046

CLIENT: FRASERS PROPERTY

PROJECT TITLE: SHRIMPTON CREEK BRIDGE

CLADDING DETAILS SHEET B

SCALE	PHASE	PROJECT / DRAWING No.	REVISION
AS NOTED	TENDER	30013046-222	02

150 mm ON ORIGINAL — A1

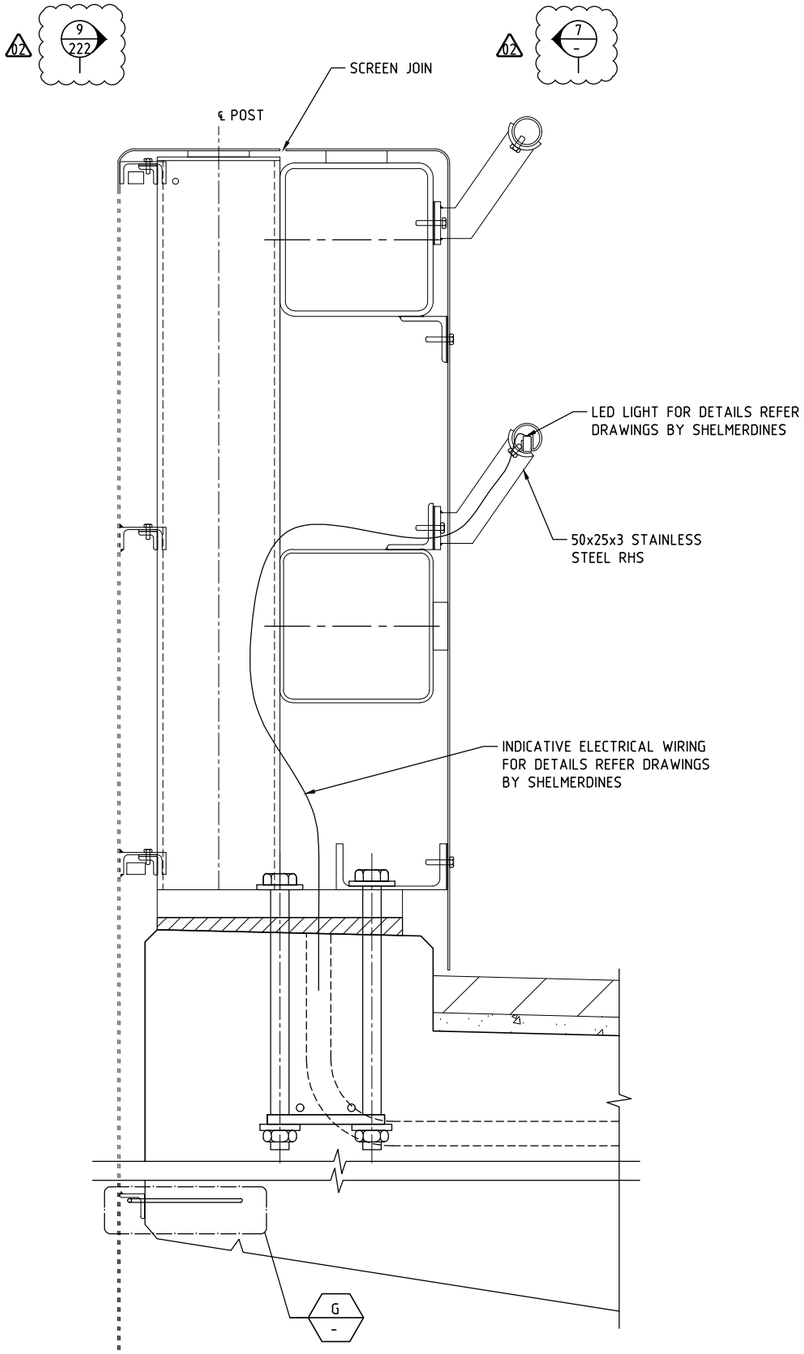

CLADDING DETAILS AT HANDRAIL LIGHTING POWER SUPPLY LOCATIONS

SCALE 1:5

02 FOR BARRIER POST AND HANDRAIL DETAILS REFER DRG No 181

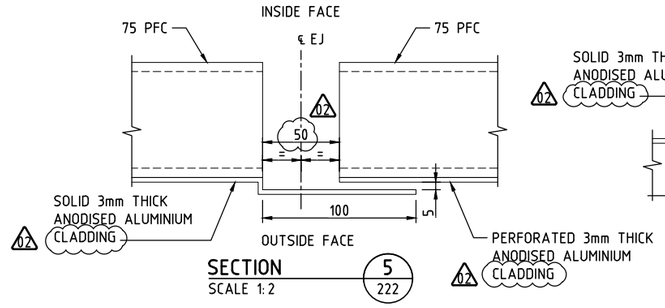

SECTION 5/222
SCALE 1:2

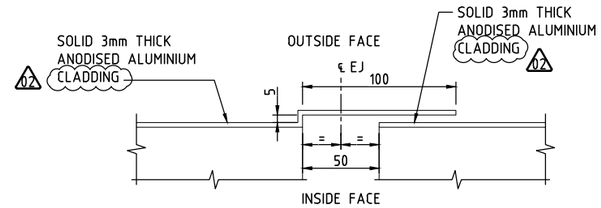

SECTION 6/222
SCALE 1:2

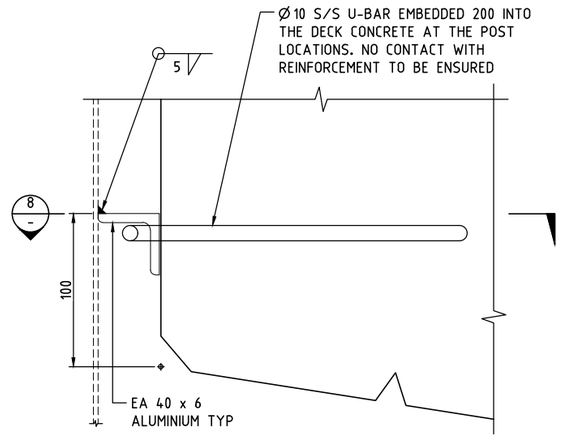

DETAIL E/222 F/221 G/-
SCALE 1:2

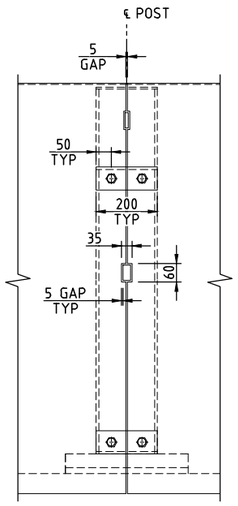

VIEW 7/- 02
SCALE 1:10

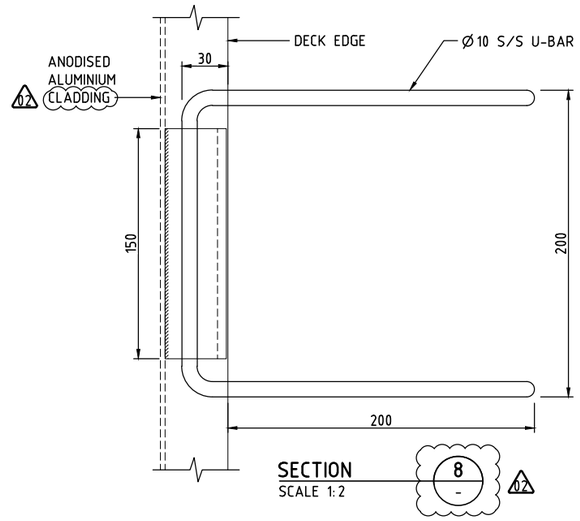

SECTION 8/- 02
SCALE 1:2

GENERAL NOTES

CLADDING PANEL NEEDS TO BE BENT IN CURVE TO FOLLOW THE BARRIER PROFILE.
FOR COLOR AND PERFORATION DETAILS OF CLADDING REFER SPECIFICATIONS IN THE CONTRACT DOCUMENT.
PANEL AT ENDS TO TURN IN AND STOP WITH 10mm GAP
FOR STRUCTURAL STEEL NOTES REFER DRAWING No 182.

STAINLESS STEEL

ALL STAINLESS STEEL (S/S) SHALL BE GRADE 304 U.N.O. ALL WELDS SHALL BE 6 CFW U.N.O.
CONNECTIONS BETWEEN DISSIMILAR METALS SHALL BE MADE USING NEOPRENE OR NYLON SEPARATORS.
MINIMUM CONNECTIONS SHALL BE 10PL 2/M10(S/S) BOLTS U.N.O.
SHOP DRAWINGS.
SHALL BE SUBMITTED BEFORE COMMENCEMENT OF FABRICATION.
ALL STAINLESS STEEL MATERIALS SHALL NOT BE STORED OR BROUGHT INTO CONTACT WITH ANY CARBON STEEL OR OTHER FERROUS METALS INCLUDING TOOLS;
STAINLESS STEEL PLATE TO ASTM A240.
STAINLESS STEEL FLAT BAR AND ROUND BAR TO ASTM A276.
ALL STAINLESS STEEL BOLTS TO CLASS 2 B8M TO ASTM A193.
STAINLESS STEEL SET SCREWS TO AS/NZS ISO 3506.3.
GRADE 304 ELECTRODES SHALL BE USED FOR WELDING GRADE 304 GRADE STAINLESS STEEL;
WELDS SHALL BE CATEGORY 2B IN ACCORDANCE WITH AS1554.6 TABLE 6.1 THE EXTENT OF NON-DESTRUCTIVE EXAMINATION OF WELDS WILL BE IN ACCORDANCE WITH AS1554.6 TABLE 7.4. ;
AFTER FABRICATION, PICKLING AND PASSIVATION WILL BE IN ACCORDANCE WITH ASTM A380 IN LINE WITH THE REQUIREMENTS OF PPR PART C1 CLAUSE 20.5.3.
WELDER SHALL BE QUALIFIED AND PERFORMED IN ACCORDANCE WITH AS/NZS 1554.6;
EDGES TO BE PROTECTIVE TREATED SHALL BE ROUNDED TO A RADIUS OF 1.5mm UNLESS NOTED OTHERWISE.
TO PROVIDE RESISTANCE TO PITTING CORROSION AND TEA STAINING, THE SURFACE ROUGHNESS (RA) SHALL BE <0.5 MICRONS. DEPENDING ON THE PRODUCT, THE FOLLOWING SURFACE FINISHES ARE ACCEPTABLE.

ALUMINIUM

ALUMINIMUM MATERIALS SHALL COMPLY WITH AUSTRALIAN STANDARDS 1664, 1734 AND 1866 AS APPROPRIATE.
THE ALLOY SHALL BE AS SHOWN ON THE DRAWINGS.
ALL WORKMANSHIP AND MATERIAL SHALL BE ACCORDANCE WITH AS1664 ALUMINIUM STRUCTURES AND AS1665 WELDING OF ALUMINIUM STRUCTURES.
ALL WELDING OF ALUMINIUM SHALL BE CARRIED OUT IN ACCORDANCE WITH AS1665 AND THE FOLLOWING:
- WELD CATEGORY B.
- ALL WELDS SHALL BE INERT GAS WELD USING PULSED-ARC WELDING (GTAW OR GMAW) TO AS1665(2004).
- ALL ALUMINIUM WELDING AND FABRICATION SHALL BE CARRIED OUT BY AN ACCREDITED FABRICATOR TO AS1664 & AS1665.

ALL WELDS SHALL BE 3 CFW U.N.O.
CONNECTIONS BETWEEN DISSIMILAR METALS SHALL BE MADE USING NEOPRENE OR NYLON SEPARATORS.
ALUMINIUM SURFACES IN CONTACT WITH CONCRETE SHALL BE COATED WITH ALKALI RESISTANT BITUMEN PAINT.
SHOP DRAWINGS SHALL BE SUBMITTED BEFORE COMMENCEMENT OF FABRICATION.
MINIMUM CONNECTIONS SHALL BE 10PL 2/M10(S/S) BOLTS U.N.O.
ALL WORK SHALL BE NEATLY FINISHED WITH ALL SHARP EDGES TO HAVE GROUND SMOOTH FINISH.

These plans are referred to in certificate no. 16746 approved by:
Eric Hausfeld
Registered Certifier
Registration No: BDC 2416
Categories: Certifier – Subdivision, Certifier – Strata, Certifier – Stormwater, Certifier – Road & Drainage, Certifier – Hydraulic (stormwater)
Land Development Certificates
www.LDC.com.au

DRAWING FILE LOCATION / NAME: V:_Vault\Projects\3001\30013046\110_CADD\CAD\DWG\30013046-223.dwg
PLOT DATE: 13 Oct 2021 TIME: 22:52:12

EXTERNAL REFERENCE FILES: X_30013046_SMEC_A1, X_BRG_SEC

REV	DATE	AMENDMENT / REVISION DESCRIPTION	WVR No.	APPROVAL
01	20.08.2021	ISSUED FOR TENDER	001	JD
02	14.10.2021	ISSUED FOR TENDER	002	JD

TITLE	NAME
DRAFTER	T.SABAPATHI
DRAFTING CHECK	V.S.KODURU
DESIGNER	V.S.KODURU
DESIGN CHECK	V.BALAKRISHNAN
PROJECT MANAGER	J.DICKERSON
PROJECT DIRECTOR	K.LUU

SCALES AT A1 SIZE DRAWING

DESIGNER: SMEC
Member of the Surbana Jurong Group
© ABN 47 065 475 149
LEVEL 5, 20 BERRY STREET
NORTH SYDNEY NSW 2060
SMEC PROJECT No 30013046

CLIENT: FRASERS PROPERTY

PROJECT TITLE: SHRIMPTON CREEK BRIDGE
CLADDING DETAILS
SHEET C

SCALE	PHASE	PROJECT / DRAWING No.	REVISION
AS NOTED	TENDER	30013046-223	02

150 mm ON ORIGINAL
A1

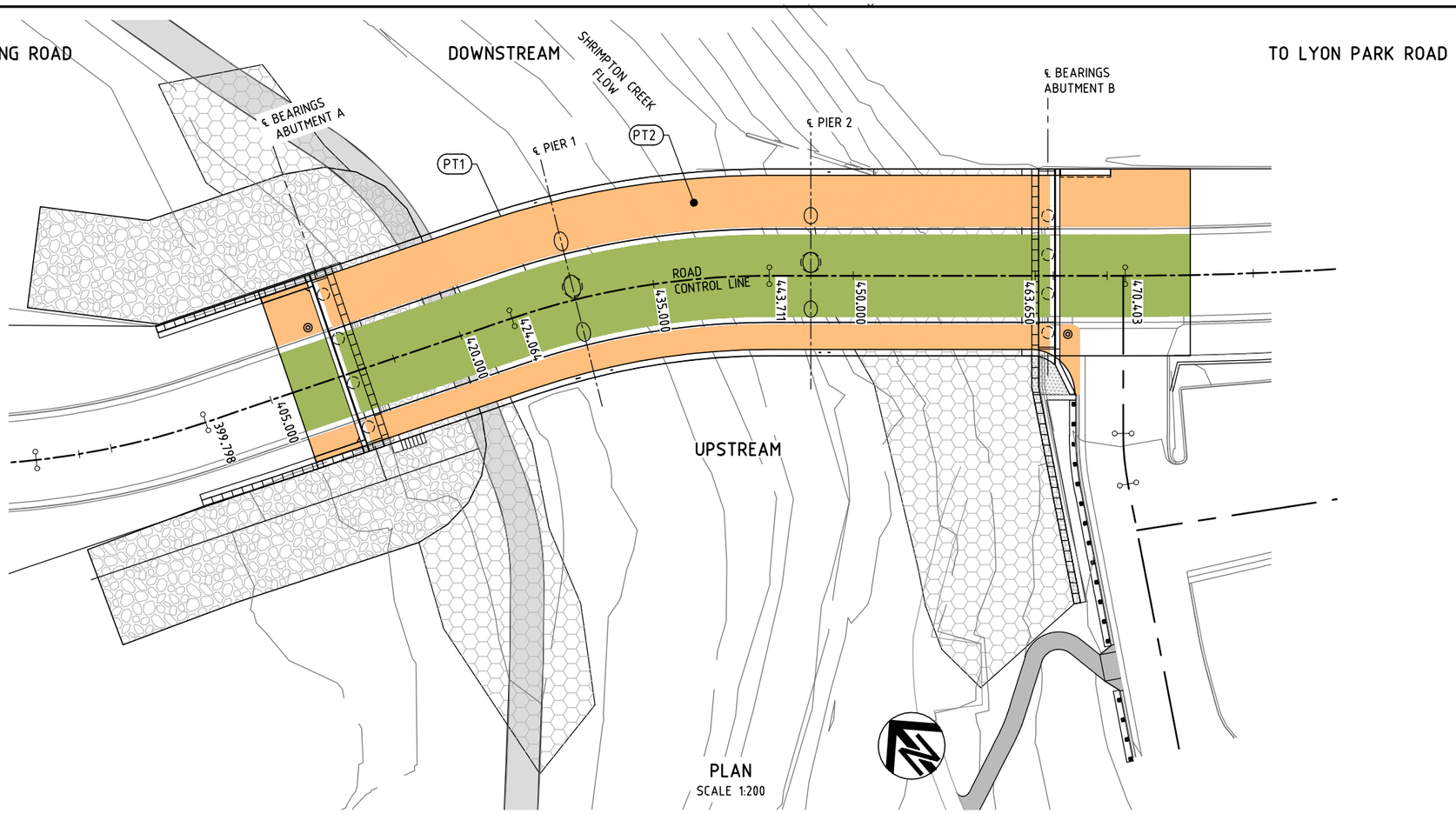

PLAN
SCALE 1:200

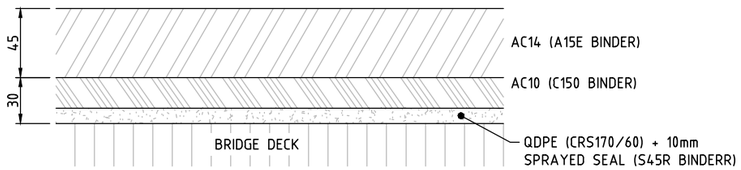

PAVEMENT TYPE - PT1
NOT TO SCLAE

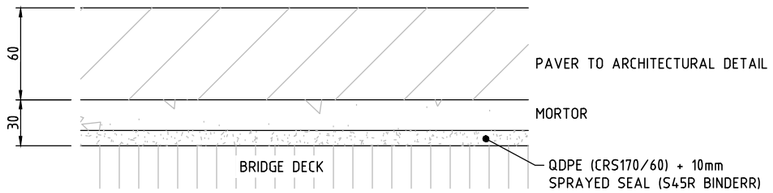

PAVEMENT TYPE - PT2
NOT TO SCLAE

These plans are referred to in certificate no. **16746** approved by:
Eric Hausfeld
Registered Certifier
Registration No: BDC 2416
Categories: Certifier – Subdivision, Certifier – Strata, Certifier – Stormwater, Certifier – Road & Drainage, Certifier – Hydraulic (stormwater)
Land Development Certificates
www.LDC.com.au

GENERAL NOTES
ALL DIMENSIONS ARE IN MILLIMETRES UNLESS NOTED OTHERWISE.
TREATMENT OF CONCRETE SURFACE FOR APPROACH SLABS AND BRIDGE DECK TO BE IN ACCORDANCE WITH TfNSW QA SPECIFICATION B312.

DRAWING FILE LOCATION / NAME: V:_Vault\Projects\3001\30013046\110_CADD\CAD\DWG\30013046-230.dwg
PLOT DATE: 14 Oct 2021 TIME: 00:30:28

EXTERNAL REFERENCE FILES: X_30013046_SMEC_A1, X_DES_MAIN, X_SURV, X_BRG_PLAN, X_BRG_STORM PROTECTION, X_PROP_SERVICES

REV	DATE	AMENDMENT / REVISION DESCRIPTION	WVR No.	APPROVAL
01	20.08.2021	ISSUED FOR TENDER	001	JD

TITLE	NAME
DRAFTER	T.SABAPATHI
DRAFTING CHECK	V.S.KODURU
DESIGNER	V.S.KODURU
DESIGN CHECK	V.BALAKRISHNAN
PROJECT MANAGER	J.DICKERSON
PROJECT DIRECTOR	K.LUU

SCALES AT A1 SIZE DRAWING: 0 2000 4000 6000 8000 10000mm; 2000 1000; 1:200

DESIGNER: SMEC
Member of the Surbana Jurong Group
© ABN 47 065 475 149
LEVEL 5, 20 BERRY STREET
NORTH SYDNEY NSW 2060
SMEC PROJECT No 30013046

CLIENT: FRASERS PROPERTY

PROJECT TITLE: SHRIMPTON CREEK BRIDGE

BRIDGE AND APPROACH SLAB PAVEMENT DETAILS

SCALE	PHASE	PROJECT / DRAWING No.	REVISION
AS NOTED	TENDER	30013046-230	01

150 mm ON ORIGINAL
A1

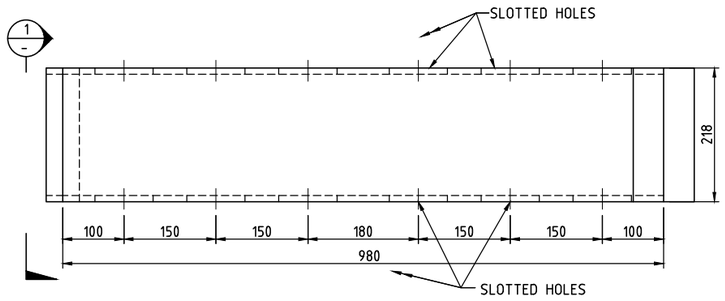

ELEVATION
SCALE 1:5

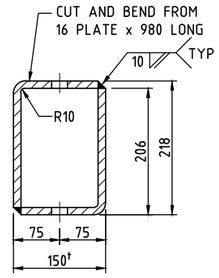

VIEW 1
SCALE 1:5

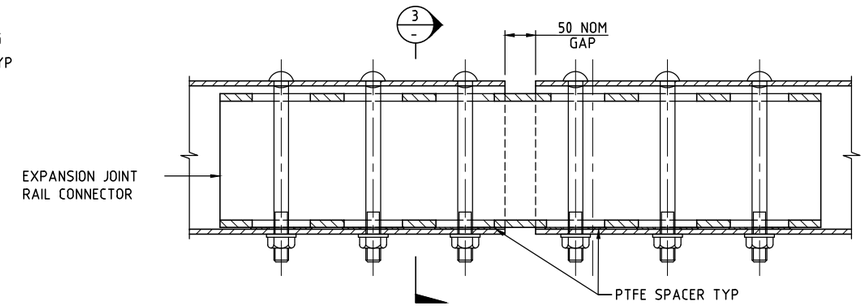

SECTION 2
SCALE 1:5

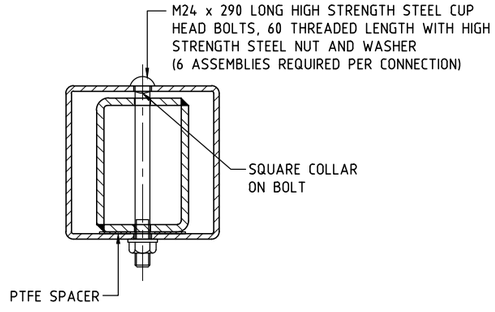

SECTION 3
SCALE 1:5

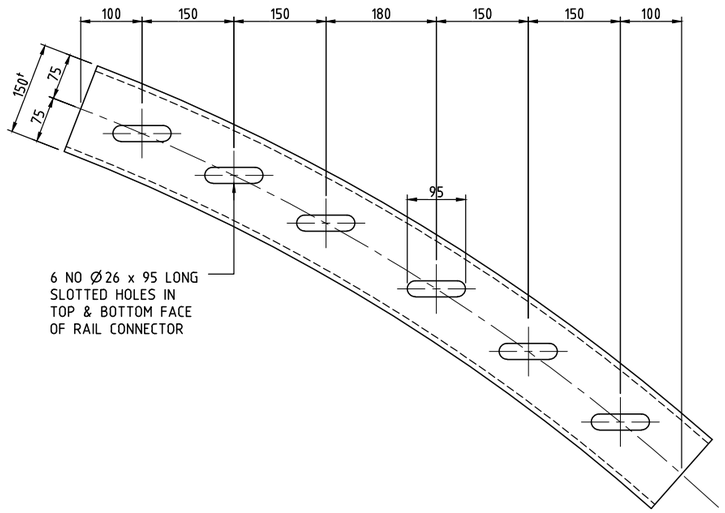

PLAN
ASSEMBLY AT EXPANSION JOINT RAIL CONNECTION
SCALE 1:5

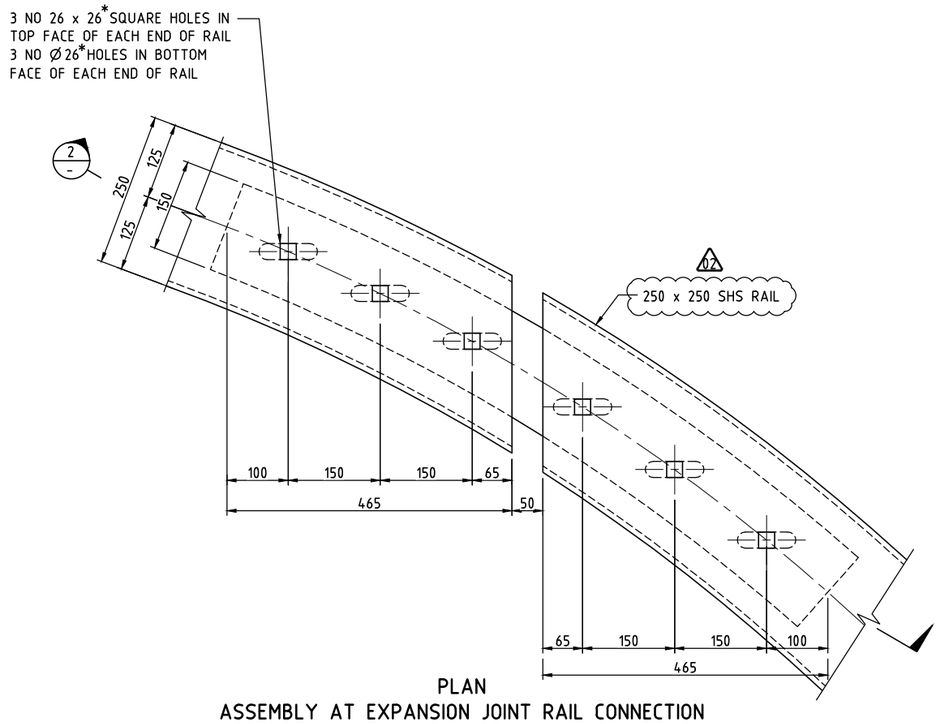

PLAN
ASSEMBLY AT EXPANSION JOINT RAIL CONNECTION
SCALE 1:5

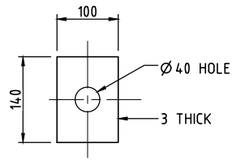

PTFE SPACER
SCALE 1:5

DETAIL AT EXPANSION JOINT CONNECTION

(FOR 250 x 250 SHS RAIL)

These plans are referred to in certificate no. **16746** approved by:
Eric Hausfeld
Registered Certifier
Registration No: BDC 2416
Categories: Certifier – Subdivision, Certifier – Strata, Certifier – Stormwater, Certifier – Road & Drainage, Certifier – Hydraulic (stormwater)
Land Development Certificates
www.LDC.com.au

GENERAL NOTES

FOR GENERAL NOTES RELATED TO THIS DRAWING, REFER DRG No 182.

DRAWING FILE LOCATION / NAME	PLOT DATE	TIME
V:_Vault\Projects\3001\30013046\110_CADD\CAD\DWG\30013046-235.dwg	14 Oct 2021	00:32:09

EXTERNAL REFERENCE FILES	REV	DATE	AMENDMENT / REVISION DESCRIPTION	WVR No.	APPROVAL
X_30013046_SMEC_A1	01	20.08.2021	ISSUED FOR TENDER	001	JD
	02	14.10.2021	ISSUED FOR TENDER	002	JD

TITLE	NAME
DRAFTER	T.SABAPATHI
DRAFTING CHECK	V.S.KODURU
DESIGNER	V.S.KODURU
DESIGN CHECK	V.BALAKRISHNAN
PROJECT MANAGER	J.DICKERSON
PROJECT DIRECTOR	K.LUU

SCALES AT A1 SIZE DRAWING: 0 100 200mm; 50 25; 1:5

DESIGNER: SMEC
Member of the Surbana Jurong Group
© ABN 47 065 475 149
LEVEL 5, 20 BERRY STREET
NORTH SYDNEY NSW 2060
SMEC PROJECT No 30013046

CLIENT: FRASERS PROPERTY

PROJECT TITLE: SHRIMPTON CREEK BRIDGE

RAIL SPLICE DETAILS
AT CURVE LOCATION

SCALE	PHASE	PROJECT / DRAWING No.	REVISION
AS NOTED	TENDER	30013046-235	02

150 mm ON ORIGINAL
A1

300001(2)-ENG-001

ENGINEERING PLANS OF INFRASTRUCTURE WORKS - STAGE 1B LOT 100 D.P.1262209 & LOT 1 D.P.859537 EPPING ROAD & LYONPARK ROAD, MACQUARIE PARK, SSDA 8903

M.G.A.

LOCALITY SKETCH

NOT TO SCALE

INDEX OF DRAWINGS

DRAWING No.	NAME
300001(2)-ENG-001	COVER SHEET, INDEX OF DRAWINGS & LOCALITY SKETCH
300001(2)-ENG-002	GENERAL NOTES
300001(2)-ENG-003	OVERALL SITE PLAN
300001(2)-ENG-004	DEMOLITION PLAN
300001(2)-ENG-005	SURVEY SETOUT PLAN
300001(2)-ENG-006	STRUCTURAL NOTES
300001(2)-ENG-007	FLOOD EXTENTS PLAN
300001(2)-ENG-101	DETAIL PLAN
300001(2)-ENG-151	PAVEMENT PLAN
300001(2)-ENG-152	PAVEMENT DETAILS
300001(2)-ENG-181	SUBSOIL DRAINAGE PLAN
300001(2)-ENG-201	TYPICAL ROAD PROFILES, KERB DETAILS & ROAD SETOUT TABLES
300001(2)-ENG-202	KERB RAMP, TEMPORARY BERM & BIN FOOTING DETAILS
300001(2)-ENG-211	ROAD LONGITUDINAL SECTION - ROAD No.01 - SHEET 1
300001(2)-ENG-212	ROAD LONGITUDINAL SECTION - ROAD No.01 - SHEET 2
300001(2)-ENG-213	ROAD LONGITUDINAL SECTION - ROAD No.02
300001(2)-ENG-231	ROAD CROSS SECTIONS - ROAD No.01 - SHEET 1
300001(2)-ENG-232	ROAD CROSS SECTIONS - ROAD No.01 - SHEET 2
300001(2)-ENG-233	ROAD CROSS SECTIONS - ROAD No.01 - SHEET 3
300001(2)-ENG-234	ROAD CROSS SECTIONS - ROAD No.01 - SHEET 4
300001(2)-ENG-235	ROAD CROSS SECTIONS - ROAD No.01 - SHEET 5
300001(2)-ENG-236	ROAD CROSS SECTIONS - ROAD No.01 - SHEET 6
300001(2)-ENG-237	ROAD CROSS SECTIONS - ROAD No.01 - SHEET 7
300001(2)-ENG-238	ROAD CROSS SECTIONS - ROAD No.01 - SHEET 8
300001(2)-ENG-239	ROAD CROSS SECTIONS - ROAD No.01 - SHEET 9
300001(2)-ENG-240	ROAD CROSS SECTIONS - ROAD No.02 - SHEET 1
300001(2)-ENG-241	ROAD CROSS SECTIONS - ROAD No.02 - SHEET 2
300001(2)-ENG-242	ROAD CROSS SECTIONS - ROAD No.02 - SHEET 3
300001(2)-ENG-243	ROAD CROSS SECTIONS - ROAD No.02 - SHEET 4
300001(2)-ENG-244	ROAD CROSS SECTIONS - ROAD No.02 - SHEET 5
300001(2)-ENG-301	INTERSECTION DETAILS - KERB RETURNS KR03 & KR04
300001(2)-ENG-302	INTERSECTION DETAILS - KERB RETURNS KR05 & KR06
300001(2)-ENG-303	INTERSECTION DETAILS - KERB RETURNS KR10 & KR11
300001(2)-ENG-310	MRV TURNING PATHS - DETAIL PLANS
300001(2)-ENG-351	CARPARK DETAIL PLAN - CP07, CP08, CP10 & CP11
300001(2)-ENG-352	CARPARK LONGITUDINAL SECTIONS - CP07, CP08, CP10 & CP11
300001(2)-ENG-353	CARPARK DETAIL PLAN - CP02, CP03, CP04 & CP05
300001(2)-ENG-354	CARPARK LONGITUDINAL SECTIONS - CP02, CP03 & CP04
300001(2)-ENG-355	CARPARK SETOUT TABLES - CP02, CP03, CP04 & CP05
300001(2)-ENG-361	OVERALL LIF CARPARK PLAN
300001(2)-ENG-362	LIF CARPARK DETAIL PLAN - CARPARK No.1
300001(2)-ENG-363	LIF CARPARK SECTION - CARPARK CL No.1
300001(2)-ENG-364	DRIVEWAY LONGITUDINAL SECTIONS - DRIVEWAY No.1 & No.2
300001(2)-ENG-365	KERB RETURN LONGITUDINAL SECTIONS - KR101, KR101A, KR102, KR102A & KR102B
300001(2)-ENG-366	FOOTPATH No.1 LONGITUDINAL SECTION & TYPICAL CARPARK No.1 DETAILS
300001(2)-ENG-367	LIF CARPARK DETAIL PLAN - CARPARK No.2
300001(2)-ENG-368	LIF CARPARK SECTION - CARPARK CL No.2
300001(2)-ENG-369	DRIVEWAY LONGITUDINAL SECTION - DRIVEWAY No.03
300001(2)-ENG-370	KERB RETURN LONGITUDINAL SECTIONS - KR103 & KR103A
300001(2)-ENG-371	TYPICAL DETAILS & SECTIONS
300001(2)-ENG-401	STORMWATER CATCHMENT PLAN
300001(2)-ENG-411	STORMWATER SETOUT TABLE & DETAILS
300001(2)-ENG-421	STORMWATER CALCULATION CHARTS - 20 YEAR A.R.I.
300001(2)-ENG-422	STORMWATER CALCULATION CHARTS - 100 YEAR A.R.I.
300001(2)-ENG-431	STORMWATER LONGITUDINAL SECTIONS - SHEET 1
300001(2)-ENG-432	STORMWATER LONGITUDINAL SECTIONS - SHEET 2

INDEX OF DRAWINGS

DRAWING No.	NAME
300001(2)-ENG-433	STORMWATER LONGITUDINAL SECTIONS - SHEET 3
300001(2)-ENG-434	STORMWATER LONGITUDINAL SECTIONS - SHEET 4
300001(2)-ENG-435	STORMWATER LONGITUDINAL SECTIONS - SHEET 5
300001(2)-ENG-451	BASIN DETAIL PLAN
300001(2)-ENG-481	CUSTOM STORMWATER PIT - PIT No.1/14
300001(2)-ENG-482	CUSTOM STORMWATER PIT - PIT No.1/15
300001(2)-ENG-483	CUSTOM STORMWATER PIT - PIT No.1/16
300001(2)-ENG-484	CUSTOM STORMWATER PIT - PIT No.1/17
300001(2)-ENG-485	CUSTOM STORMWATER PIT - PIT No.3/9
300001(2)-ENG-486	CUSTOM STORMWATER PIT - PIT No.3/10
300001(2)-ENG-487	CUSTOM STORMWATER PIT - PIT No.3/11
300001(2)-ENG-488	CUSTOM STORMWATER PIT - PIT No.3/12
300001(2)-ENG-489	CUSTOM STORMWATER PIT - PIT No.3/13
300001(2)-ENG-490	CUSTOM STORMWATER PIT - PIT No.15/3
300001(2)-ENG-491	CUSTOM STORMWATER PIT - PIT No.15/4
300001(2)-ENG-492	CUSTOM STORMWATER PIT - PIT No.15/5
300001(2)-ENG-493	CUSTOM STORMWATER PIT - PIT No.100/4
300001(2)-ENG-494	CUSTOM STORMWATER PIT - PIT No.101/1
300001(2)-ENG-495	TYPICAL CUSTOM STORMWATER PIT DETAILS - SHEET 1
300001(2)-ENG-496	TYPICAL CUSTOM STORMWATER PIT DETAILS - SHEET 2
300001(2)-ENG-497	TYPICAL CUSTOM STORMWATER PIT DETAILS - SHEET 3
300001(2)-ENG-498	STORMWATER PIT 101\2 SETOUT PLAN
300001(2)-ENG-499	CUSTOM STORMWATER PIT - PIT No.1/10
300001(2)-ENG-501	SITE REGRADE PLAN
300001(2)-ENG-551	RETAINING WALL DETAIL PLAN
300001(2)-ENG-561	RETAINING WALL LONGITUDINAL SECTION - RW100
300001(2)-ENG-562	RETAINING WALL LONGITUDINAL SECTION - BRIDGE WALL No.1
300001(2)-ENG-563	RETAINING WALL LONGITUDINAL SECTION - EXISTING RETAINING WALL
300001(2)-ENG-564	RETAINING WALL LONGITUDINAL SECTION - RW101
300001(2)-ENG-571	TYPICAL RETAINING WALL DETAILS & NOTES
300001(2)-ENG-572	TYPICAL GABION WALL DETAILS & NOTES
300001(2)-ENG-573	TYPICAL GABION WALL BRIDGING STRUCTURE DETAILS
300001(2)-ENG-574	TYPICAL GABION WALL NOTES
300001(2)-ENG-601	EROSION & SEDIMENT CONTROL PLAN
300001(2)-ENG-611	EROSION & SEDIMENT CONTROL DETAILS & NOTES
300001(2)-ENG-701	BRIDGE DETAIL PLAN
300001(2)-ENG-711	FOOTPATH No.2 PLAN & LONGITUDINAL SECTION
300001(2)-ENG-721	BRIDGE ABUTMENT LONGITUDINAL SECTION & HEADWALL OUTLET DETAILS
300001(2)-ENG-722	HEADWALL OUTLET DETAILS
300001(2)-ENG-751	LINEMARKING & SIGNAGE PLAN
300001(2)-ENG-801	TREE RETENTION PLAN
300001(2)-ENG-901	COMBINED SERVICES PLAN
300001(2)-ENG-902	TYPICAL ROAD PROFILES - SERVICE LOCATIONS
300001(2)-ENG-903	SERVICES RELOCATION PLAN
300001(2)-ENG-904	SERVICES RELOCATION SECTIONS

These plans are referred to in certificate no. **16746** approved by:

Eric Hausfeld
Registered Certifier

Registration No: BDC 2416
Categories: Certifier – Subdivision
Certifier – Strata
Certifier – Stormwater
Certifier – Road & Drainage
Certifier – Hydraulic (stormwater)

Land Development Certificates
www.LDC.com.au

DIAL 1100 BEFORE YOU DIG

CONSTRUCTION ISSUE

REV.	DATE	AMENDMENT	DESIGN	DRAWN	CHECKED	APPROVED
1	21.01.22	ISSUED FOR CONSTRUCTION	B.M.	J.J.	B.M.	B.M.

SCALES

DESIGN FILE S:\300001\DESIGN\12D\STAGE 2 CC\DESIGN FILE.project

ALL DIMENSIONS ARE IN METRES. DO NOT SCALE

adw Johnson
Central Coast
5 Pioneer Avenue,
P.O. Box 3717,
Tuggerah N.S.W. 2259
Phone: (02) 4305 4300
Fax: (02) 4305 4399
email: coast@adwjohnson.com.au
www.adwjohnson.com.au
ABN 62 129 445 398

CLIENT

FRASERS PROPERTY

PROPERTY DESCRIPTION

LOT 100 D.P.1262209 & LOT 1 D.P.859537
EPPING ROAD & LYONPARK ROAD,
MACQUARIE PARK
SSDA 8903

SURVEYED: ADW Johnson
DATUM: GDA94 M.G.A. ZONE 56 A.H.D.

PROJECT: PROPOSED SUBDIVISION

PLAN TITLE: COVER SHEET, INDEX OF DRAWINGS & LOCALITY SKETCH

PROJECT No.	DISCIPLINE	NUMBER	REV.
300001(2) -	ENG -	001	1

Plotted By: Ben Myles Plot Date: 21/01/22 2:27:40PM Cad File: S:\300001\DRAWINGS\ENGINEERING\CIVIL\STAGE 2 CC ENG\300001(2)-ENG-001.DWG

100mm AT FULL SIZE

This plan includes coloured information. If you have a black and white copy you do not have all of the information. This note is coloured RED.

300001(2)-ENG-002

RYDE CITY COUNCIL

GENERAL:

1. ALL MATERIALS AND PRODUCTS FOR INSTALLATION AND CONSTRUCTION SHALL COMPLY WITH AUSTRALIAN STANDARDS. MONITORING TESTING ("STRING LINE" AND "ROLL") WHERE SPECIFIED BY COUNCIL'S MANUAL OF ENGINEERING STANDARDS, TO BE PERFORMED BY COUNCIL, SHALL BE ARRANGED **24 HOURS** IN ADVANCE. WHERE A COUNCIL OFFICER IS NOT AVAILABLE, A GEOTECHNICAL ENGINEER MAY PERFORM SUCH TESTS.
2. ALL TREES WITHIN THE ALLOTMENT AND RESERVES (OTHER THAN ROAD RESERVES) SHALL BE RETAINED, UNLESS OTHERWISE NOMINATED BY THE APPROVED LANDSCAPE PLAN. REMOVAL OF TREES FOR THE ESTABLISHED OF FIRE-BREAKS SHALL BE CARRIED OUT IN CONSULTATION WITH THE FIRE CONTROL OFFICER AND/OR COUNCIL'S ENVIRONMENTAL OFFICER.

TRAFFIC CONTROL:

1. TRAFFIC CONTROL MEASURES SHALL BE IN ACCORDANCE WITH THE RMS DOCUMENT "TRAFFIC CONTROL AT WORKSITES".

REGRADING:

1. TOPSOIL **150mm** THICK SHALL BE APPLIED TO ALL FOOTPATHS AND FILLED AREAS. WHERE TURF IS NOT REQUESTED, ALL EXPOSED TOPSOIL SHALL BE SEEDED IMMEDIATELY UPON COMPLETION OF THE SOIL SPREADING OPERATION. TURF TO BE PLACED FULL WIDTH BETWEEN KERB AND FOOTPATH.
2. ALL FILL WITHIN LOTS INCLUDING BATTERS SHALL BE PLACED IN ACCORDANCE WITH **AS 3798** TO **LEVEL 1** INSPECTION AND TESTING.

PAVEMENT:

1. PROVISION SHOULD BE MADE FOR SUITABLE PROTECTION OF THE EXISTING ROAD PAVEMENTS, KERB AND GUTTER AND FOOTPATH FORMATION. VEHICULAR ACCESS TO ALL SERVICES TO ADJOINING PROPERTIES AFFECTED BY CONSTRUCTION WORKS, SHALL BE MAINTAINED AT ALL TIMES.

STORMWATER:

1. SUBSOIL DRAINS SHALL BE PROVIDED IN ACCORDANCE WITH COUNCILS STANDARDS, ADDITIONAL DRAINS SHALL BE PROVIDED WHERE CONSIDERED NECESSARY, BY COUNCIL OR A GEOTECHNICAL ENGINEER.

SEDIMENT & EROSION CONTROL:

2. ALL SILT CONTROL MEASURES SHALL BE PLACED PRIOR TO THE COMMENCEMENT OF EARTHWORKS. SUCH MEASURES SHALL BE SUBJECT TO FURTHER ADDITIONS, WHERE CONSIDERED NECESSARY, AS DIRECTED BY THE PROJECT MANAGER OR COUNCIL, DURING THE PROGRESSIONS OF WORKS. ALL FINAL EROSION PREVENTION MEASURES INCLUDING ESTABLISHMENT OF GRASS SHALL BE COMPLETED PRIOR TO THE "FINAL" INSPECTION.

GENERAL

1. ALL WORKS SHALL BE CARRIED OUT IN ACCORDANCE WITH THE APPROVED PLANS, SUBJECT TO RYDE COUNCIL DCP 2014 SECTIONS 8.1, 8.2 + 8.5, MACQUARIE PARK CORRIDOR TECHNICAL MANUAL, COUNCIL STANDARD DRAWINGS AND RELEVANT AUSTRALIAN STANDARDS.
2. SETOUT INFORMATION IS TO BE VERIFIED BY THE CONTRACTOR AGAINST THE PLAN VIEW, LONGITUDINAL SECTIONS, AND ELECTRONIC 12d DATA BEFORE BEING USED. IF THERE IS A DISCREPANCY, THE SUPERINTENDENT IS TO BE NOTIFIED AND DIRECTION WILL BE PROVIDED IN WRITING BEFORE PROCEEDING.
3. THE DRAWINGS ARE A DIAGRAMMATIC REPRESENTATION OF THE WORK TO BE CARRIED OUT ONLY, AND DIMENSIONS SHALL NOT BE OBTAINED BY SCALING.
4. ALL LEVELS SHALL BE OBTAINED FROM ESTABLISHED BENCHMARKS TO THE **AUSTRALIAN HEIGHT DATUM (A.H.D.)**.
5. POINTS OF CONFLICT BETWEEN NEW CONSTRUCTION AND EXISTING UTILITY SERVICE MAINS SHALL BE IDENTIFIED, EXPOSED AND REPORTED TO THE PROJECT MANAGER PRIOR TO CONSTRUCTION. SERVICE CONDUITS SHALL BE LAID IN POSITIONS AS APPROVED BY THE RELEVANT AUTHORITY.
6. ALL MATERIALS AND PRODUCTS FOR INSTALLATION AND CONSTRUCTION SHALL COMPLY WITH AUSTRALIAN STANDARDS.
7. THE INSPECTION, SUPERVISION AND REPORTING REQUIREMENTS OF A SUITABLY QUALIFIED ECOLOGIST REGARDING THE REMOVAL AND RELOCATION OF ANY THREATENED FAUNA SPECIES SHALL BE UNDERTAKEN AS PER RELEVANT CONDITIONS OF CONSENT.
8. STORMWATER AND SEWER CONNECTIONS TO LOT 11 DP1247523 TO BE MAINTAINED AT ALL TIMES DURING CONSTRUCTION.

SURVEYING

1. SURVEY BY: ADW JOHNSON PTY LTD
2. ORIGIN OF COORDINATES: GDA94 MGA56 BENCH MARK P.M.50023 E:325216.337 N:6260317.86 RL.80.785 AHD
3. ALL WORK TO BE SET OUT BY A REGISTERED SURVEYOR
4. ALL LEVELS SHOWN ARE A.H.D. GDA94

GEOTECHNICAL

1. GEOTECHNICAL INVESTIGATION PERFORMED BY:

   DOUGLAS PARTNERS - REFERENCE 86043.01
   DATED: DECEMBER 2019

   REFER TO THE AFOREMENTIONED REPORT DURING CONSTRUCTION.

EARTHWORKS & REGRADING

1. SITE REGRADE AREA IS TO BE DRAINED IF REQUIRED AND ALL EXISTING VEGETATION REMOVED.
2. ALL TOPSOIL AND UNSUITABLE MATERIAL WILL BE REMOVED PRIOR TO PLACEMENT OF EXCESS MATERIAL FROM ROAD EXCAVATION IN ACCORDANCE WITH DIRECTIONS FROM GEOTECHNICAL ENGINEER.
3. MAXIMUM NOMINATED THICKNESS OF FILL LAYER
   - **150mm** IN ROAD RESERVE AREAS
   - **300mm** IN OTHER AREAS
4. MINIMUM NOMINATED COMPACTION OF FILL
   - **98%** STANDARD IN ROAD RESERVE AREAS
   - **95%** STANDARD IN OTHER AREAS
5. COMPACTION OF EARTHWORKS ASSOCIATED WITHIN LOTS TO BE CARRIED OUT UNDER **LEVEL 1** SUPERVISION IN ACCORDANCE WITH **AS 3798-1996** AND A REPORT SUBMITTED TO THE PRINCIPAL CERTIFYING AUTHORITY WITH DOCUMENTATION ACCOMPANYING THE RESPECTIVE COMPLIANCE CERTIFICATE APPLICATION.
6. ALL AREAS DISTURBED DURING EARTHWORKS ARE TO BE REINSTATED AND SEEDED IMMEDIATELY.
7. ALL SITE REGRADE TO BE CONTROL FILL IN ACCORDANCE WITH GEOTECHNICAL ENGINEERS DIRECTION.
8. WHERE PRACTICAL CATCHDRAINS ARE TO BE CONSTRUCTED UPSLOPE OF THE SITE REGRADE TO DIVERT CLEAN SURFACE WATER.
9. SITE REGRADE AREAS ARE TO BE TURFED OR SEEDED AS DIRECTED BY LANDSCAPE ARCHITECT OR SUPERINTENDENT.
10. ALL TREES TO BE REMOVED ARE TO BE MULCHED/ CHIPPED ON SITE AND REUSED AS MULCH WITHIN THE DEVELOPMENT.

STORMWATER

1. ALL STORMWATER PITS DEEPER THAN **1.0m** TO HAVE STEP IRONS.
2. PRECAST PITS TO BE INSTALLED AS PER MANUFACTURERS SPECIFICATION.
3. ALL INTERALLOTMENT DRAINAGE PITS TO BE PROVIDED WITH HINGED, LOCKABLE GRATES.
4. ALL INTERALLOTMENT DRAINAGE PITS DEEPER THAN **2.5m** TO BE DESIGNED BY A SUITABLY QUALIFIED STRUCTURAL ENGINEER.
5. ALL RCP STORMWATER PIPES TO BE RUBBER RING JOINTED (RRJ) UNLESS INDICATED OTHERWISE.
6. ALL FINAL GRATE LEVELS FOR IAD PITS TO BE **100mm** BELOW DESIGN SURFACE LEVELS.
7. ALL STORMWATER PITS AND PIPES TO BE INSTALLED IN ACCORDANCE WITH RYDE COUNCIL STANDARD DRAWINGS.
8. ALL STORMWATER PITS TO HAVE MINIMUM 35mm MASS CONCRETE BENCH AS PER COUNCIL STANDARD DRAWING.

RIPRAP

1. ALL PERMANENT ROCK SCOUR PROTECTION MUST CONSIST OF HARD DURABLE RUN-OF-QUARRY ROCK, SIZED TO RESIST PREDICTED SCOUR VELOCITIES. ROCK MUST BE ANGULAR AND BULKY RATHER THAN FLAT, TO ENSURE A GOOD "BIND" AND TO RESIST NEGATIVE HYDRAULIC PRESSURE. ROCK IS TO BE PLACED OVER GEOFABRIC TO PREVENT EROSION OF UNDERLYING FINE BED SEDIMENTS.
2. COMPACT THE SUBGRADE FILL TO THE DENSITY OF THE SURROUNDING UNDISTURBED MATERIAL.
3. PREPARE A SMOOTH, EVEN FOUNDATION FOR THE STRUCTURE THAT WILL ENSURE THAT THE NEEDLE-PUNCHED GEOTEXTILE DOES NOT SUSTAIN DAMAGE WHEN COVERED WITH ROCK.
4. SHOULD ANY MINOR DAMAGE TO THE GEOTEXTILE OCCUR, REPAIR BEFORE SPREADING ANY AGGREGATE. FOR REPAIRS, PATCH BY PLACING ONE PIECE OF FABRIC OVER THE DAMAGE, MAKING SURE THAT ALL JOINTS AND PATCHES OVERLAP MORE THAN **300mm**.
5. LAY ROCK FOLLOWING THE DRAWING, AND WITH A MINIMUM DIAMETER OF **300mm**.

LINEMARKING & SIGNAGE

1. LINEMARKING & SIGNAGE TO BE PROVIDED IN ACCORDANCE WITH APPROVED DRAWINGS PREPARED BY ADW JOHNSON REFERENCE 300001-ESK-190-192.

EROSION & SEDIMENT CONTROL

1. EROSION AND SEDIMENT CONTROL MEASURES ARE TO BE CONSISTENT WITH THE NSW GOVERNMENT'S "MANAGING URBAN STORMWATER: SOILS AND CONSTRUCTION".
2. THE ARRANGEMENT SHOWN ON THE PLANS IS DIAGRAMMATIC ONLY. AMENDMENTS MAY NEED TO BE MADE DURING CONSTRUCTION.
3. ALL SEDIMENT AND EROSION CONTROL MEASURES, INCLUDING BASINS AND DIVERSION DRAINS, ARE TO BE IN PLACE PRIOR TO STRIPPING OF SITE.
4. MAINTAIN ALL EROSION AND SEDIMENT CONTROL MEASURES UNTIL COMPLETE REHABILITATION IS ACHIEVED.
5. DISTURBED AREAS ARE TO BE KEPT TO A MINIMUM. NO MORE THAN **2.5ha** OF THE SITE SHALL BE EXPOSED TO EROSION AT ANY ONE TIME.
6. ALL TOPSOIL IN SITE REGRADING AREAS AND ROAD RESERVES TO BE STOCKPILED ON SITE AS SHOWN.
7. STOCKPILE LOCATIONS INDICATIVE ONLY. CONTRACTOR TO IDENTIFY LOCATIONS AND SEEK APPROVAL FROM SUPERINTENDENT.
8. STOCKPILE AREA TO BE FULLY FENCED WITH SILT PROOF FABRIC AT ALL TIMES.
9. IMPORTED MATERIAL TO BE PLACED DIRECTLY INTO SITE REGRADING AREAS. IMPORTED MATERIAL IS NOT TO BE STOCKPILED.
10. STOCKPILES ARE TO BE REMOVED AS SOON AS PRACTICABLE AND SITES REINSTATED AS SOON AS POSSIBLE.
11. CONSERVE ALL TOPSOIL, STOCKPILE AND PROTECT FOR RE-USE ON SITE.
12. STOCKPILES OF MATERIAL ARE TO BE PLACED AWAY FROM DRAINAGE FLOW PATHS AND HEAVILY TRAFFICABLE AREAS AND ARE TO BE SURROUNDED BY SILT FENCING AT ALL TIMES.
13. PROTECT ALL DISTURBED AREAS FROM EROSION.
14. MINIMISE SEDIMENTATION.
15. CONSTRUCT STABILISED EARTH BERMS TO DIRECT CLEAN RUNOFF FROM ENTERING THE DISTURBED SITE
16. CONSTRUCT STABILISED DIVERSION BANKS TO COLLECT RUNOFF FROM DISTURBED AREAS AND DIRECT IT TO A SEDIMENT CONTROL PIT.
17. ERECT AND MAINTAIN SILT FENCES AT THE DOWNSLOPE SIDE OF DISTURBED AREA/S DURING CONSTRUCTION.
18. PLACE SEDIMENT INLET TRAPS AROUND ALL PITS WITHIN, AND DOWNSTREAM OF, THE DEVELOPMENT.
19. PROVIDE GRAVEL BAGS AS REQUIRED.
20. SILT FENCES AND HAY BALING TO BE PLACED WHERE DIRECTED BY COUNCIL'S ENGINEER AND MAINTAINED AT ALL TIMES.
21. ALL DISTURBED AREAS ARE TO BE STABILISED IMMEDIATELY UPON FINISHING CONSTRUCTION ON THAT AREA WITH BITUMEN STABILIZED STRAW MULCH.
22. WHERE EVIDENCE OF SILT LEAVING THE SITE IS FOUND, CONTRACTOR IS TO CLEAR ALL SEDIMENT (INCLUDING THAT IN STORMWATER INFRASTRUCTURE) AT THEIR OWN COST.
23. FOLLOWING RAIN EVENTS, ALL SEDIMENT AND EROSION CONTROL MEASURES ARE TO BE AUDITED AND REINSTATED IF NECESSARY.
24. CONTROL CLEAN WATER FROM ABOVE THE SITE, THROUGH THE SITE.
25. KEEP CLEAN WATER SEPARATE FROM DIRTY WATER.
26. KEEP RUNOFF FROM DISTURBED AREAS, WHERE POSSIBLE, SEPARATE FROM DIRTY WATER.
27. ALL DISTURBED AREAS ARE TO BE RE-VEGETATED OR OTHERWISE PROTECTED AS SOON AS PRACTICAL.
28. ALL NATURAL VEGETATION AREAS OUTSIDE THE BOUNDARIES OF THE PROPOSED DEVELOPMENT WILL BE FENCED WITH NO GO FENCING TO KEEP THE AREAS FREE FROM DISTURBANCE OF MACHINERY, PARKED VEHICLES AND WASTE MATERIAL.
29. AREAS OUTSIDE THE BOUNDARIES OF THE PROPOSED DEVELOPMENT WILL BE FENCED WITH NO GO FENCING TO KEEP THE AREAS FREE FROM DISTURBANCE OF MACHINERY, PARKED VEHICLES AND WASTE MATERIAL.
30. TREES TO BE RETAINED WITHIN THE CONSTRUCTION AREAS ARE TO BE PROTECTED IN ACCORDANCE WITH AS 4970:2009 BY TREE PROTECTION FENCING IN ACCORDANCE WITH THE APPROVED LANDSCAPE MANAGEMENT PLANS
31. ESTABLISH A RESTRICTION BOUNDARY AROUND PROTECTED PLANT WITH PARAWEB FENCING. TEMPORARILY RELOCATE FENCE TO ALLOW CONSTRUCTION OF REQUIRED WORKS AND RE-ESTABLISH PROTECTION ZONE AFTER WORKS COMPLETES.

These plans are referred to in certificate no. **16746** approved by:
Eric Hausfeld
Registered Certifier
Registration No: BDC 2416
Categories: Certifier – Subdivision, Certifier – Strata, Certifier – Stormwater, Certifier – Road & Drainage, Certifier – Hydraulic (stormwater)
Land Development Certificates
www.LDC.com.au

DIAL 1100 BEFORE YOU DIG

CONSTRUCTION ISSUE

REV.	DATE	AMENDMENT	DESIGN	DRAWN	CHECKED	APPROVED
1	21.01.22	ISSUED FOR CONSTRUCTION	B.M.	J.J.	B.M.	B.M.

SCALES

DESIGN FILE S:\300001\DESIGN\12D\STAGE 2 CC\DESIGN FILE.project

ALL DIMENSIONS ARE IN METRES. DO NOT SCALE

adw Johnson
Central Coast
5 Pioneer Avenue,
P.O. Box 3717,
Tuggerah N.S.W. 2259
Phone: (02) 4305 4300
Fax: (02) 4305 4399
email: coast@adwjohnson.com.au
www.adwjohnson.com.au
ABN 62 129 445 398

CLIENT: FRASERS PROPERTY

PROPERTY DESCRIPTION: LOT 100 D.P.1262209 & LOT 1 D.P.859537, EPPING ROAD & LYONPARK ROAD, MACQUARIE PARK, SSDA 8903

SURVEYED: ADW Johnson
DATUM: GDA94 M.G.A. ZONE 56 A.H.D.

PROJECT: PROPOSED SUBDIVISION
PLAN TITLE: GENERAL NOTES

PROJECT No.	DISCIPLINE	NUMBER	REV.
300001(2)	ENG	002	1

Plotted By: Ben Myles Plot Date: 21/01/22 2:27:43PM Cad File: S:\300001\DRAWINGS\ENGINEERING\CIVIL\STAGE 2 CC ENG\300001(2)-ENG-002.DWG

100mm AT FULL SIZE

This plan includes coloured information. If you have a black and white copy you do not have all of the information. This note is coloured RED.

300001(2)-ENG-003

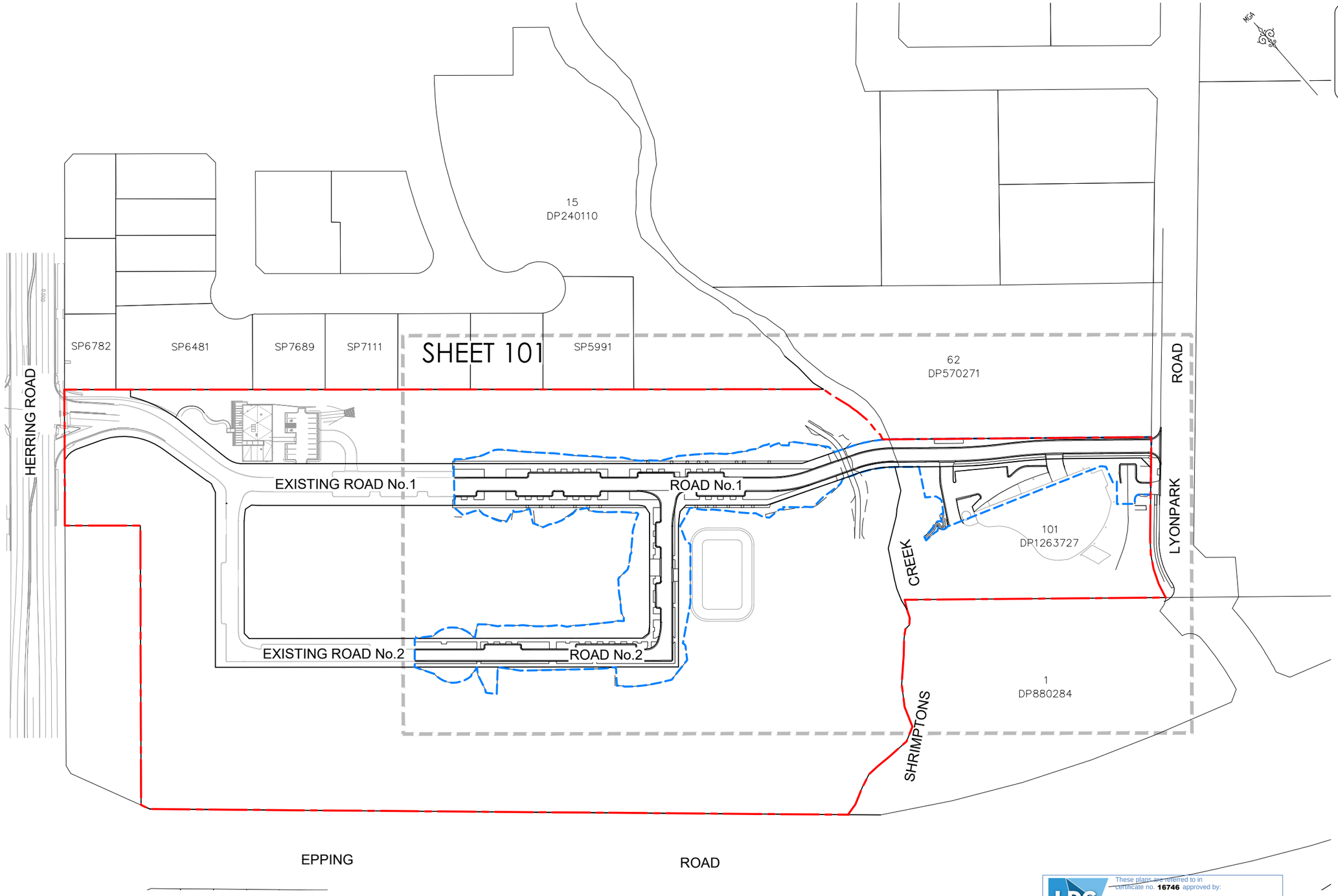

LEGEND

- SITE BOUNDARY
- LIMIT OF WORKS BOUNDARY
- PROPOSED LOT BOUNDARY
- EXISTING LOT BOUNDARY
- FUTURE WORKS

GENERAL NOTES: –

1. BUILDING LAYOUTS SHOWN FOR INFORMATION ONLY

OVERALL SITE PLAN

SCALE 1:1000

LDC

These plans are referred to in certificate no. **16746** approved by:

Eric Hausfeld
Registered Certifier

Registration No: BDC 2416

Categories: Certifier – Subdivision
Certifier – Strata
Certifier – Stormwater
Certifier – Road & Drainage
Certifier – Hydraulic (stormwater)

Land Development Certificates
www.LDC.com.au

DIAL 1100 BEFORE YOU DIG

CONSTRUCTION ISSUE

REV.	DATE	AMENDMENT	DESIGN	DRAWN	CHECKED	APPROVED
1	21.01.22	ISSUED FOR CONSTRUCTION	B.M.	J.J.	B.M.	B.M.

SCALES: A1 1:1000 — 0 25 50m — A3 1:2000

DESIGN FILE S:\300001\DESIGN\12D\STAGE 2 CC\DESIGN FILE.project

ALL DIMENSIONS ARE IN METRES. DO NOT SCALE

adw Johnson

Central Coast
5 Pioneer Avenue,
P.O. Box 3717,
Tuggerah N.S.W. 2259
Phone: (02) 4305 4300
Fax: (02) 4305 4399
email: coast@adwjohnson.com.au
www.adwjohnson.com.au
ABN 62 129 445 398

CLIENT: FRASERS PROPERTY

PROPERTY DESCRIPTION: LOT 100 D.P.1262209 & LOT 1 D.P.859537
EPPING ROAD & LYONPARK ROAD,
MACQUARIE PARK
SSDA 8903

SURVEYED: ADW Johnson

DATUM: GDA94 M.G.A. ZONE 56 A.H.D.

PROJECT: PROPOSED SUBDIVISION

PLAN TITLE: OVERALL SITE PLAN

PROJECT No.	DISCIPLINE	NUMBER	REV.
300001(2) –	ENG –	003	1

Plotted By: Ben Myles Plot Date: 21/01/22 2:27:46PM Cad File: S:\300001\DRAWINGS\ENGINEERING\CIVIL\STAGE 2 CC ENG\300001(2)-ENG-003.DWG

100mm AT FULL SIZE

This plan includes coloured information. If you have a black and white copy you do not have all of the information. This note is coloured RED.

300001(2)-ENG-004

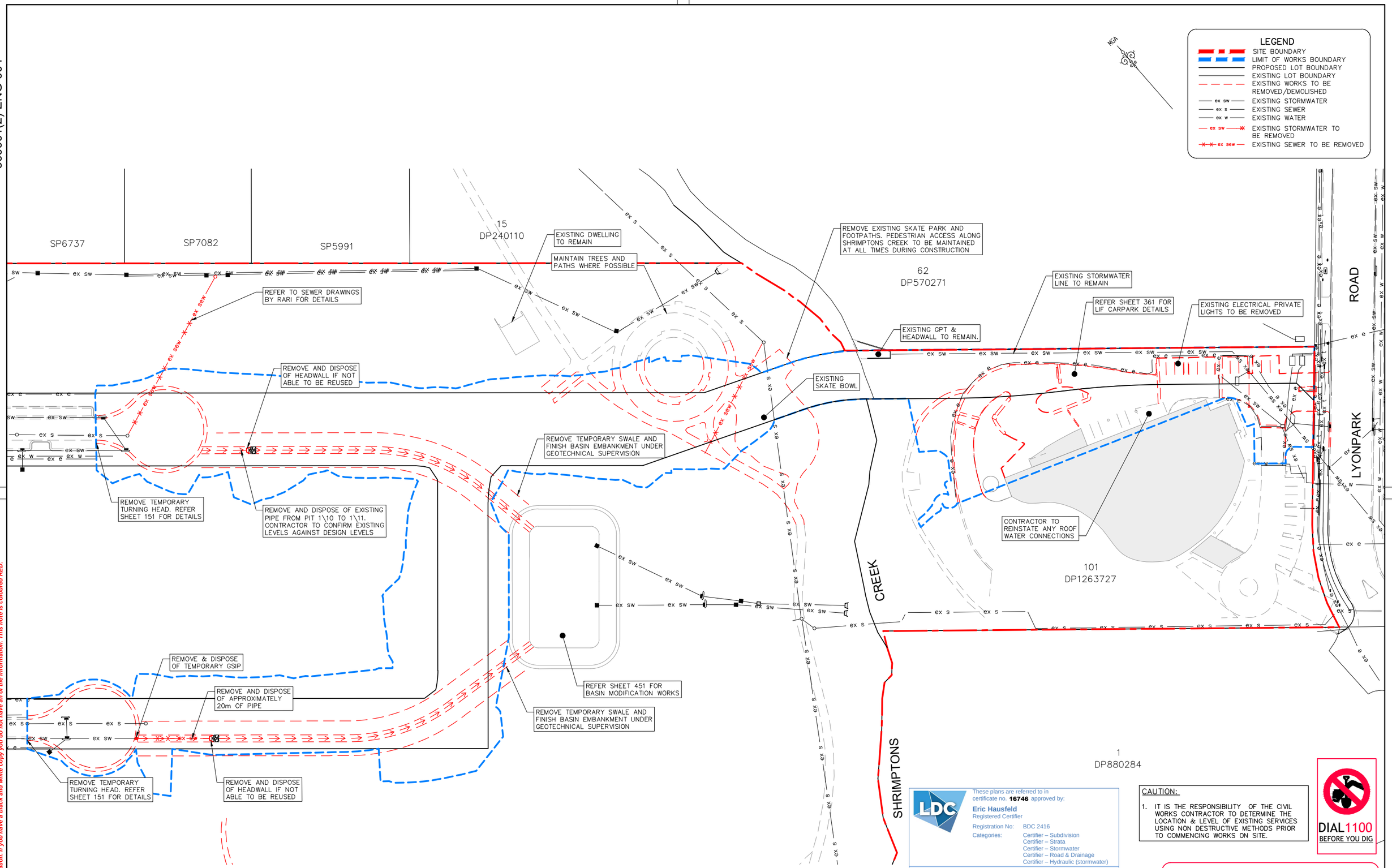

DEMOLITION PLAN

SCALE 1:500

These plans are referred to in certificate no. **16746** approved by:
Eric Hausfeld
Registered Certifier
Registration No: BDC 2416
Categories: Certifier – Subdivision, Certifier – Strata, Certifier – Stormwater, Certifier – Road & Drainage, Certifier – Hydraulic (stormwater)
Land Development Certificates
www.LDC.com.au

CAUTION:

1. IT IS THE RESPONSIBILITY OF THE CIVIL WORKS CONTRACTOR TO DETERMINE THE LOCATION & LEVEL OF EXISTING SERVICES USING NON DESTRUCTIVE METHODS PRIOR TO COMMENCING WORKS ON SITE.

DIAL 1100 BEFORE YOU DIG

CONSTRUCTION ISSUE

REV.	DATE	AMENDMENT	DESIGN	DRAWN	CHECKED	APPROVED
1	21.01.22	ISSUED FOR CONSTRUCTION	B.M.	J.J.	B.M.	B.M.

SCALES: A1 1:500 — 0, 12.5, 25.0m — A3 1:1000

DESIGN FILE S:\300001\DESIGN\12D\STAGE 2 CC\DESIGN FILE.project

ALL DIMENSIONS ARE IN METRES. DO NOT SCALE

adw Johnson
Central Coast
5 Pioneer Avenue,
P.O. Box 3717,
Tuggerah N.S.W. 2259
Phone: (02) 4305 4300
Fax: (02) 4305 4399
email: coast@adwjohnson.com.au
www.adwjohnson.com.au
ABN 62 129 445 398

CLIENT: FRASERS PROPERTY

PROPERTY DESCRIPTION: LOT 100 D.P.1262209 & LOT 1 D.P.859537
EPPING ROAD & LYONPARK ROAD,
MACQUARIE PARK
SSDA 8903

SURVEYED: ADW Johnson
DATUM: GDA94 M.G.A. ZONE 56 A.H.D.

PROJECT: PROPOSED SUBDIVISION

PLAN TITLE: DEMOLITION PLAN

PROJECT No.	DISCIPLINE	NUMBER	REV.
300001(2) –	ENG –	004	1

Plotted By: Ben Myles Plot Date: 21/01/22 2:27:50PM Cad File: S:\300001\DRAWINGS\ENGINEERING\CIVIL\STAGE 2 CC ENG\300001(2)-ENG-004.DWG

100mm AT FULL SIZE

This plan includes coloured information. If you have a black and white copy you do not have all of the information. This note is coloured RED.

300001(2)-ENG-005

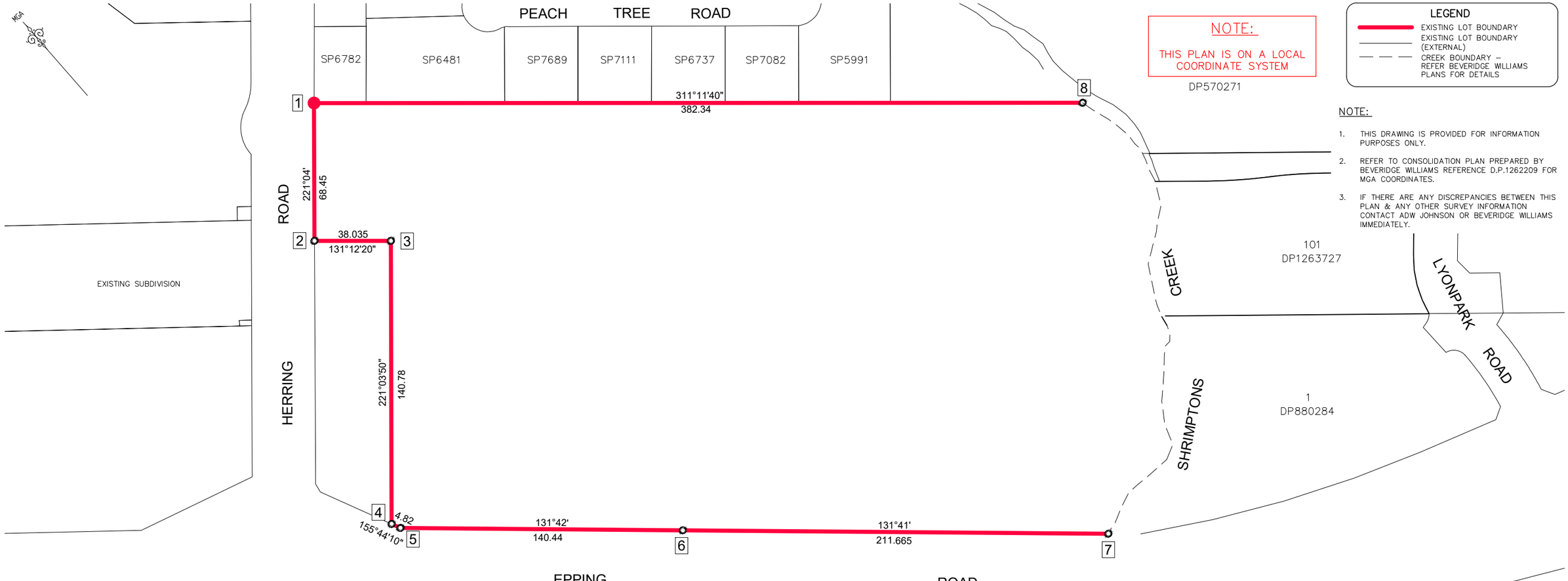

NOTE:

THIS PLAN IS ON A LOCAL COORDINATE SYSTEM

LEGEND

- EXISTING LOT BOUNDARY
- EXISTING LOT BOUNDARY (EXTERNAL)
- CREEK BOUNDARY – REFER BEVERIDGE WILLIAMS PLANS FOR DETAILS

NOTE:

1. THIS DRAWING IS PROVIDED FOR INFORMATION PURPOSES ONLY.
2. REFER TO CONSOLIDATION PLAN PREPARED BY BEVERIDGE WILLIAMS REFERENCE D.P.1262209 FOR MGA COORDINATES.
3. IF THERE ARE ANY DISCREPANCIES BETWEEN THIS PLAN & ANY OTHER SURVEY INFORMATION CONTACT ADW JOHNSON OR BEVERIDGE WILLIAMS IMMEDIATELY.

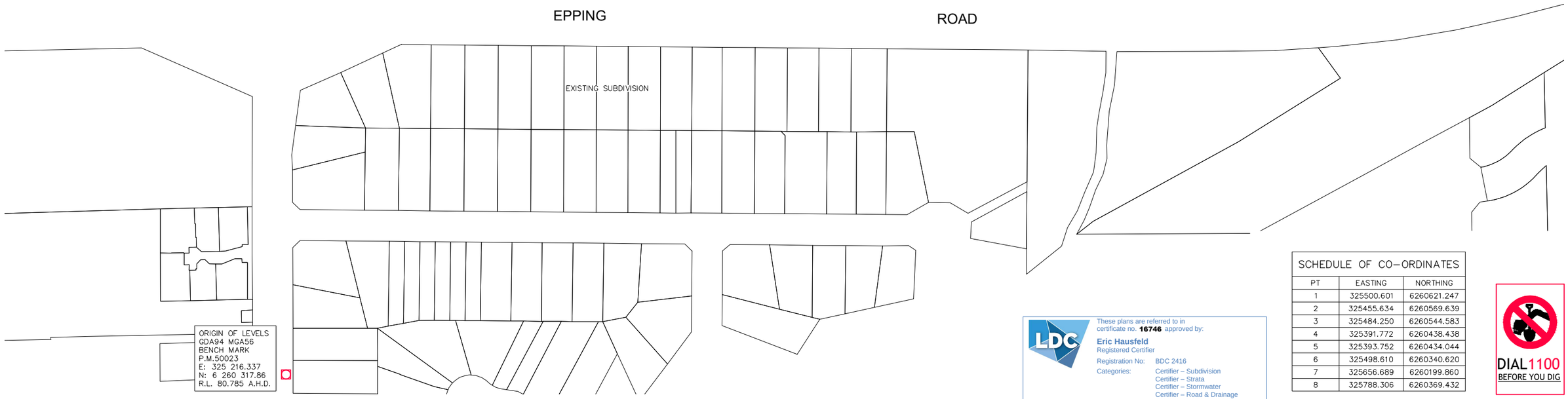

SURVEY SETOUT PLAN

SCALE 1:1000

SCHEDULE OF CO-ORDINATES

PT	EASTING	NORTHING
1	325500.601	6260621.247
2	325455.634	6260569.639
3	325484.250	6260544.583
4	325391.772	6260438.438
5	325393.752	6260434.044
6	325498.610	6260340.620
7	325656.689	6260199.860
8	325788.306	6260369.432

These plans are referred to in certificate no. **16746** approved by:

Eric Hausfeld
Registered Certifier

Registration No: BDC 2416
Categories: Certifier – Subdivision
Certifier – Strata
Certifier – Stormwater
Certifier – Road & Drainage
Certifier – Hydraulic (stormwater)

Land Development Certificates
www.LDC.com.au

DIAL 1100 BEFORE YOU DIG

CONSTRUCTION ISSUE

REV.	DATE	AMENDMENT	DESIGN	DRAWN	CHECKED	APPROVED
1	21.01.22	ISSUED FOR CONSTRUCTION	B.M.	J.J.	B.M.	B.M.

SCALES: A1 1:1000 — 0 25 50m — A3 1:2000

ALL DIMENSIONS ARE IN METRES. DO NOT SCALE

adw Johnson
Central Coast
5 Pioneer Avenue,
P.O. Box 3717,
Tuggerah N.S.W. 2259
Phone: (02) 4305 4300
Fax: (02) 4305 4399
email: coast@adwjohnson.com.au
www.adwjohnson.com.au
ABN 62 129 445 398

CLIENT: FRASERS PROPERTY

PROPERTY DESCRIPTION: LOT 100 D.P.1262209 & LOT 1 D.P.859537
EPPING ROAD & LYONPARK ROAD,
MACQUARIE PARK
SSDA 8903

SURVEYED: ADW Johnson
DATUM: GDA94 M.G.A. ZONE 56 A.H.D.

PROJECT: PROPOSED SUBDIVISION

PLAN TITLE: SURVEY SETOUT PLAN

PROJECT No. 300001(2) – DISCIPLINE ENG – NUMBER 005 REV. 1

DESIGN FILE S:\300001\DESIGN\12D\STAGE 2 CC\DESIGN FILE.project

Plotted By: Ben Myles Plot Date: 21/01/22 2:27:53PM Cad File: S:\300001\DRAWINGS\ENGINEERING\CIVIL\STAGE 2 CC ENG\300001(2)-ENG-005.DWG

100mm AT FULL SIZE

This plan includes coloured information. If you have a black and white copy you do not have all of the information. This note is coloured RED.

300001(2)-ENG-006

GENERAL - STRUCTURAL

1. THESE DRAWINGS SHALL BE READ IN CONJUNCTION WITH THE CIVIL ENGINEERING PLANS, AND OTHER CONSULTANTS' DRAWINGS AND SPECIFICATIONS. ANY DISCREPANCY SHALL BE REFERRED TO THE ENGINEER BEFORE PROCEEDING WITH THE WORK. CONSTRUCTION FROM THESE DRAWINGS, AND THEIR ASSOCIATED CONSULTANTS' DRAWINGS IS NOT TO COMMENCE UNTIL APPROVED BY THE LOCAL AUTHORITIES.

2. ALL MATERIALS AND WORKMANSHIP SHALL BE IN ACCORDANCE WITH THE RELEVANT AND CURRENT AUSTRALIAN STANDARDS.

3. ALL DIMENSIONS SHOWN SHALL BE VERIFIED BY THE BUILDER ON SITE. ENGINEERS' DRAWINGS SHALL NOT BE SCALED FOR DIMENSIONS.

4. DURING CONSTRUCTION STRUCTURES SHALL BE MAINTAINED IN A STABLE CONDITION AND NO PART SHALL BE OVERSTRESSED. TEMPORARY BRACING SHALL BE PROVIDED BY THE CONTRACTOR TO KEEP THE WORKS AND EXCAVATIONS STABLE AT ALL TIMES.

5. UNLESS NOTED OTHERWISE ALL LEVELS ARE IN METRES AND ALL DIMENSIONS ARE IN MILLIMETRES.

6. THE DRAWINGS SHALL NOT BE USED FOR SETOUT PURPOSES. CONTRACTOR IS TO REFER TO CURRENT CIVIL ENGINEERING PLANS FOR SETOUT INFORMATION.

7. POINTS OF CONFLICT BETWEEN NEW CONSTRUCTION AND EXISTING UTILITY SERVICE MAINS SHALL BE IDENTIFIED, EXPOSED AND REPORTED TO THE PROJECT ENGINEER PRIOR TO CONSTRUCTION.

FOUNDATIONS

1. STORMWATER PIT BASES AND RETAINING WALL FOOTINGS HAVE BEEN DESIGNED FOR AN ALLOWABLE BEARING CAPACITY OF 150kPa ON STIFF CLAY (U.N.O.) THE FOUNDATION MATERIAL SHALL BE APPROVED BY THE GEOTECHNICAL ENGINEER FOR THIS BEARING CAPACITY BEFORE PLACING MEMBRANE, REINFORCEMENT OR CONCRETE.

2. REFER TO GEOTECHNICAL INVESTIGATION REPORT No. 86043.02.R.001.Rev0 PREPARED BY DOUGLAS PARTNERS DATED 23 APRIL 2018 AND 86043.01.R.003.Rev0 PREPARED BY DOUGLAS PARTNERS DATED 22 DEC 2017.

3. FOOTINGS SHALL BE LOCATED CENTRALLY UNDER WALLS AND COLUMNS UNLESS NOTED OTHERWISE.

4. DO NOT EXCEED A RISE OF 1 IN A RUN OF 2 FOR THE LINE OF SLOPE BETWEEN ADJACENT FOOTINGS OR EXCAVATIONS.

5. FOOTINGS TO BE CONSTRUCTED AND BACKFILLED AS SOON AS POSSIBLE FOLLOWING EXCAVATION TO AVOID SOFTENING OR DRYING OUT BY EXPOSURE.

6. ALL FOUNDATION MATERIAL TO BE COMPACTED TO THE EQUIVALENT OF 98% STANDARD OR 70% RELATIVE DENSITY TO AS1289 AND TESTED PRIOR TO INSTALLATION OF FOUNDATION.

LOADING

1. THE STRUCTURAL COMPONENTS DETAILED ON THESE DRAWINGS HAVE BEEN DESIGNED IN ACCORDANCE WITH THE RELEVANT AUSTRALIAN STANDARDS FOR THE FOLLOWING LOADINGS:

   RETAINING WALLS
   SURCHARGE LOAD = 5 kPa GENERALLY (20kPa WHERE TRAFFICABLE ROAD BEHIND WALL)

   STORMWATER PITS
   SURCHARGE LOAD = 20 kPa

2. WIND LOADS ARE IN ACCORDANCE WITH AS 1170.2 AS FOLLOWS:
   IMPORTANCE LEVEL: 2
   BASIC WIND VELOCITY, Vp = 45m/s
   REGION: 2
   TERRAIN CATEGORY: TC3

FORMWORK

1. THE DESIGN CERTIFICATE CONSTRUCTION AND PERFORMANCE OF THE FORMWORK AND FALSE WORK SHALL BE THE RESPONSIBILITY OF THE BUILDER, EXCEPT TO THE EXTENT THAT FORMWORK DESIGN IS SHOWN ON THE DRAWINGS.

2. FORMWORK DESIGN, CONSTRUCTION TOLERANCES AND STRIPPING TIMES SHALL COMPLY WITH AS 3610 AND AS 3600 UNLESS OTHERWISE APPROVED BY THE ENGINEER.

3. DURING CONSTRUCTION, SUPPORT PROPPING WILL BE REQUIRED WHERE LOADS FROM STACKED MATERIALS, FORMWORK AND OTHER SUPPORTED SLABS INDUCE LOADS IN A SLAB OR BEAM WHICH EXCEED THE DESIGN LOAD FOR STRENGTH OR SERVICEABILITY AT THAT AGE. ONCE THE NOMINATED 28 DAY STRENGTH HAS BEEN ATTAINED, THESE LOADS SHALL NOT EXCEED THE DESIGN SUPERIMPOSED LOADS SET OUT IN THE LOADING NOTES.

4. THE FORMWORK SHALL NOT BE DESIGNED TO ACCOMMODATE MOVEMENTS ON RESTRAINT OR SUPPORT FROM THE PERMANENT STRUCTURE WITHOUT PRIOR APPROVAL FROM THE PROJECT DESIGN ENGINEER.

FORMWORK (CONTINUED)

5. CONCRETE FORMED SURFACES TO HAVE FINISHES IN ACCORDANCE WITH AS 3610.

6. DO NOT PLACE PERMANENT LOADS, INCLUDING MASONRY WALL AND THE LIKE, ON THE CONCRETE STRUCTURE UNTIL AFTER FORMWORK AND PROPPING IS REMOVED.

7. SPECIAL REQUIREMENTS FOR SEQUENCE OF CONCRETE PLACEMENT AND STRIPPING ARE AS FOLLOWS:
   DESIGN INFORMATION CONCERNING THE FOUNDATION FORMWORK SHALL BE DETERMINED FROM THE CONDITIONS EXISTING ON THE SITE AT THE TIME OF CONSTRUCTION. REFER ALSO TO THE GEOTECHNICAL REPORT WHERE AVAILABLE.

MASONRY

1. ALL WORKMANSHIP AND MATERIALS SHALL BE IN ACCORDANCE WITH AS 3700.

2. STRENGTHS OF BRICKS, CLASS OF BLOCKS AND TYPE OF MORTAR SHALL BE AS FOLLOWS:–

ELEMENT	MATERIAL	CHARACTERISTIC UNCONFINED COMMPRESSIVE STRENGTH, fuc	MORTAR CLASSIFICATION
SANDSTONE LOGS	NATURAL STONE	–	N/A
CORE FILLED BLOCKS	CONCRETE	15 MPa	M4
MASS ROCK	NATURAL STONE	–	N/A

3. MORTAR ADMIXTURES SHALL NOT BE USED WITHOUT THE WRITTEN APPROVAL OF THE ENGINEER.

4. ALL MASONRY WALLS SHALL HAVE A PRE–GREASED GALVANISED STEEL SLIP JOINT BETWEEN CONCRETE SOFFIT AND THE TOP OF THE MASONRY ELEMENT U.N.O. OR TWO LAYERS OF SUPER ALCOR.

5. NO CHASES OR RECESSES ARE PERMITTED IN LOAD BEARING MASONRY WITHOUT THE APPROVAL OF THE ENGINEER.

6. REINFORCED CONCRETE BLOCKWORK SHALL COMPLY WITH THE FOLLOWING U.N.O.:
   - BLOCKS SHALL BE STRENGTH GRADE 15 CONFORMING TO AS 4455.
   - MORTAR SHALL COMPRISE 1 CEMENT : 0.25 LIME : 3 SAND.
   - PROVIDE CLEANOUT HOLES AT BASE OF ALL WALLS AND ROD CORE HOLES TO REMOVE PROTRUDING MORTAR FINS.
   - CORE FILLING GROUT TO HAVE A CHARACTERISTIC STRENGTH OF 20MPa, 10mm AGGREGATE, 230mm SLUMP ±30mm.
   - PROVIDE 65mm COVER TO REINFORCING BARS FROM THE OUTSIDE FACE OF THE BRICKWORK TO ALLOW ADEQUATE GROUT COVER.

7. PROVIDE VERTICAL CONTROL JOINTS AT 10m MAX CENTRES, AND 5m MAXIMUM FROM CORNERS IN ALL MASONRY WALLS.

8. BACKFILL TO RETAINING WALLS TO BE FREE DRAINING GRANULAR MATERIAL U.N.O. PROVIDE SUBSOIL DRAIN TO WEEP HOLES.

9. ALL CAVITY CONSTRUCTION TO HAVE STAINLESS STEEL WALL TIES INSTALLED AS PER CLAUSE 4.10 AS 3700.

10. MAXIMUM HEIGHT OF BLOCK WORK TO BE POURED IN ONE LIFT TO BE 1200mm.

11. BACKFILL SHOULD NOT BE PLACED BEHIND THE WALL UNTIL ATLEAST TEN DAYS AFTER GROUTING.

CONCRETE

1. ALL WORKMANSHIP AND MATERIALS SHALL BE IN ACCORDANCE WITH AS 3600 CURRENT EDITION WITH AMENDMENTS, EXCEPT WHERE VARIED BY THE CONTRACT DOCUMENTS.

2. READYMIX CONCRETE SUPPLY SHALL COMPLY WITH AS 1379.

3. CONCRETE QUALITY ALL THE REQUIREMENTS OF THE ACSE CONCRETE SPECIFICATION DOCUMENT 1 (EDITION 6) SHALL APPLY TO THE FORMWORK, REINFORCEMENT AND CONCRETE UNLESS NOTED OTHERWISE.

4. PROJECT CONTROL TESTING SHALL BE CARRIED OUT IN ACCORDANCE WITH AS 1012

5. NO ADMIXTURES SHALL BE USED IN CONCRETE UNLESS APPROVED IN WRITING.

CONCRETE (CONTINUED)

6. CLEAR CONCRETE COVER TO ALL REINFORCEMENT FOR DURABILITY SHALL BE AS FOLLOWS UNLESS SHOWN OTHERWISE.

STRUCTURAL ITEM	CONCRETE GRADE (MPa)	CAST AGAINST GROUND (mm)	EXPOSURE TO FLOWING WATER / ATMOSPHERE (mm)
STORMWATER PIT BASE/LID	32	50	50
STORMWATER PIT WALLS	32	50	50
FOOTINGS	25	50	–
PIERS	25	75	–
BRIDGING SLAB	32	50	40
CONCRETE RETAINING WALL	32	50	40

7. ALL REINFORCEMENT SHALL BE FIRMLY SUPPORTED ON MILD STEEL PLASTIC TIPPED CHAIRS, PLASTIC CHAIRS OR CONCRETE CHAIRS AT NOT GREATER THAN 1 METRE CENTRES BOTH WAYS. BARS SHALL BE TIED AT ALTERNATE INTERSECTIONS. IN EXPOSURE CONDITIONS GREATER THAN B1 USE ONLY PLASTIC CHAIRS.

8. CONCRETE SIZES SHOWN DO NOT INCLUDE THICKNESSES OF APPLIED FINISHES.

9. NO HOLES, CHASES OR EMBEDMENT OF PIPES OTHER THAN THOSE SHOWN ON THE STRUCTURAL DRAWINGS SHALL BE MADE IN CONCRETE MEMBERS WITHOUT THE PRIOR WRITTEN APPROVAL OF THE ENGINEER.

10. CONSTRUCTION JOINTS WHERE NOT SHOWN SHALL BE LOCATED TO THE APPROVAL OF THE ENGINEER.

11. THE FINISHED CONCRETE SHALL BE A DENSE HOMOGENEOUS MASS, COMPLETELY FILLING THE FORMWORK THOROUGHLY EMBEDDING THE REINFORCEMENT AND FREE OF STONE POCKETS. ALL CONCRETE INCLUDING SLABS ON GROUND AND FOOTINGS SHALL BE COMPACTED WITH MECHANICAL VIBRATORS.

12. CURING OF ALL CONCRETE IS TO BE ACHIEVED BY KEEPING SURFACES CONTINUOUSLY WET FOR A PERIOD OF 3 DAYS, AND PREVENTION OF LOSS OF MOISTURE FOR A TOTAL OF 7 DAYS FOLLOWED BY A GRADUAL DRYING OUT. APPROVED SPRAYED ON CURING COMPOUNDS THAT COMPLY WITH AS 3799 MAY BE USED WHERE FLOOR FINISHES WILL NOT BE AFFECTED (REFER MANUFACTURER'S SPECIFICATION). POLYTHENE SHEETING OR WET HESSIAN MAY BE USED TO RETAIN CONCRETE MOISTURE WHERE NOT PROTECTED FROM WIND AND TRAFFIC.

13. CONSTRUCTION SUPPORT PROPPING IS TO BE LEFT IN PLACE WHERE NEEDED TO AVOID OVERSTRESSING THE STRUCTURE DUE TO CONSTRUCTION LOADING.

14. THE ENGINEER SHALL BE GIVEN 48 HOURS NOTICE FOR REINFORCEMENT INSPECTION AND CONCRETE SHALL NOT BE DELIVERED UNTIL FINAL APPROVAL OBTAINED.

15. REINFORCEMENT SYMBOLS:
   - N DENOTES DEFORMED RIBBED BARS, GRADE 500MPa, NORMAL DUCTILITY, NOMINATED BAR SIZE TO AS 4671 U.N.O. eg. N16
   - R DENOTES ROUND BARS, GRADE 250MPa, NORMAL DUCTILITY, NOMINATED BAR SIZE TO AS 4671 eg. R10
   - SL DENOTES SQUARE MESH, DEFORMED RIBBED BARS, GRADE 500MPa, LOW DUCTILITY, NOMINATED BAR SIZE AND SPACING TO AS 4671, U.N.O. eg. SL92 – 9mm BARS @ 200mm CENTRES
   - RL DENOTES RECTANGULAR MESH, DEFORMED RIBBED BARS, GRADE 500MPa, LOW DUCTILITY, NOMINATED BAR SIZE AND SPACING TO AS 4671 U.N.O. eg. RL1018 – 10mm BARS @ 100mm CENTRES, 8mm BARS @ 200mm CENTRES
   - TM DENOTES TRENCH MESH, DEFORMED RIBBED BARS, GRADE 500MPa, LOW DUCTILITY, NOMINATED BAR SIZE TO AS 4671 U.N.O. eg. 3–L11TM – 3 11mm BARS @100mm CENTRES LONGITUDINALLY AND CROSS BARS @ 300mm CENTRES

   NUMBER OF BARS IN GROUP — 17 N 20 – 250 — BAR GRADE AND TYPE; NOMINAL BAR SIZE IN mm; SPACING IN mm

16. REINFORCEMENT IS REPRESENTED DIAGRAMMATICALLY AND NOT NECESSARILY IN TRUE PROJECTION.

17. SLAB REINFORCEMENT SHALL EXTEND AT LEAST 65mm ONTO MASONRY SUPPORT WALLS AND 50 PERCENT OF BOTTOM REINFORCEMENT SHALL BE COGGED TO ACHIEVE ANCHORAGE AT SIMPLY SUPPORTED ENDS.

18. SPLICES IN REINFORCEMENT SHALL BE MADE ONLY IN POSITIONS SHOWN OR OTHERWISE APPROVED IN WRITING BY THE ENGINEER. LAPS SHALL BE IN ACCORDANCE WITH AS 3600 AND NOT LESS THAN THE DEVELOPMENT LENGTH FOR EACH BAR.

19. SITE BENDING OF DEFORMED REINFORCING BARS SHALL BE DONE WITHOUT HEATING USING MECHANICAL BENDING TOOLS.

20. WELDING OF REINFORCEMENT SHALL NOT BE PERMITTED UNLESS SHOWN ON THE STRUCTURAL DRAWINGS OR APPROVED BY THE ENGINEER.

21. JOGGLES TO BAR SHALL BE 1 BAR DIAMETER OVER A LENGTH OF 12 BAR DIAMETERS.

22. FABRIC SHALL BE LAPPED 2 TRANSVERSE WIRES PLUS 50mm. BUNDLED BARS SHALL BE TIED TOGETHER AT 30 BAR DIAMETER CENTRES WITH 3 WRAPS OF THE WIRE.

CONCRETE (CONTINUED)

23. WHERE TRANSVERSE TIE BARS ARE NOT SHOWN PROVIDE N12–400 SPLICED WHERE NECESSARY AND LAP WITH MAIN BARS 400mm U.N.O.

24. REINFORCING LAP/COG LENGTHS

BARø	LAP(mm)	COG
N12	500	IN ACCORDANCE WITH AS 3600
N16	600	
N20	900	
N24	1200	
N28	1500	

UNLESS NOTED OTHERWISE

25. GROUT TO BE 30MPa NON–SHRINK POURABLE GROUT. ALL BLOCKOUTS TO BE REMOVED PRIOR TO INSTALLING GROUT. GROUT AS PART OF BASE PLATE GROUTING.

26. ALL SLABS TO BE POURED ON WATERPROOF MEMBRANE UNO. WATERPROOF MEMBRANE TO BE 0.2mm THK PLASTIC MEMBRANE UNO.

27. CONCRETE QUALITY:
   ALL CEMENT TO BE TYPE SL, SHRINKAGE LIMITED CEMENT IN ACCORDANCE WITH AS 3972, EXCEPT THAT THE MAXIMUM SHRINKAGE OF THE CEMENT IN THE MORTAR TEST SAMPLE IN ACCORDANCE WITH AS 2350 SHALL BE LESS THAN 600 MICROSTAIN.

STRUCTURAL ELEMENT	SLUMP (mm)	MAX. AGG. SIZE (mm)	GRADE (MPa)
FOOTING	80	20	25
PIERS	80	20	25
BRIDGING SLAB	80	20	32
STORMWATER PIT	80	20	32
CONCRETE RETAINING WALL	80	20	32
CONCRETE RETAINING WALL FOOTING	80	20	32

These plans are referred to in certificate no. **16746** approved by:
Eric Hausfeld
Registered Certifier
Registration No: BDC 2416
Categories: Certifier – Subdivision, Certifier – Strata, Certifier – Stormwater, Certifier – Road & Drainage, Certifier – Hydraulic (stormwater)
Land Development Certificates
www.LDC.com.au

DIAL1100 BEFORE YOU DIG

CONSTRUCTION ISSUE

REV.	DATE	AMENDMENT	DESIGN	DRAWN	CHECKED	APPROVED
1	21.01.22	ISSUED FOR CONSTRUCTION	B.M.	J.J.	B.M.	B.M.

SCALES

DESIGN FILE S:\300001\DESIGN\12D\STAGE 2 CC\DESIGN FILE.project

ALL DIMENSIONS ARE IN METRES. DO NOT SCALE

adw Johnson
Central Coast
5 Pioneer Avenue,
P.O. Box 3717,
Tuggerah N.S.W. 2259
Phone: (02) 4305 4300
Fax: (02) 4305 4399
email: coast@adwjohnson.com.au
www.adwjohnson.com.au
ABN 62 129 445 398

CLIENT: FRASERS PROPERTY

PROPERTY DESCRIPTION
LOT 100 D.P.1262209 & LOT 1 D.P.859537
EPPING ROAD & LYONPARK ROAD,
MACQUARIE PARK
SSDA 8903

SURVEYED: ADW Johnson
DATUM: GDA94 M.G.A. ZONE 56 A.H.D.

PROJECT: PROPOSED SUBDIVISION
PLAN TITLE: STRUCTURAL NOTES

PROJECT No.	DISCIPLINE	NUMBER	REV.
300001(2) –	ENG –	006	1

Plotted By: Ben Myles Plot Date: 21/01/22 2:27:56PM Cad File: S:\300001\DRAWINGS\ENGINEERING\CIVIL\STAGE 2 CC ENG\300001(2)–ENG–006.DWG

100mm AT FULL SIZE
This plan includes coloured information. If you have a black and white copy you do not have all of the information. This note is coloured RED.

300001(2)-ENG-007

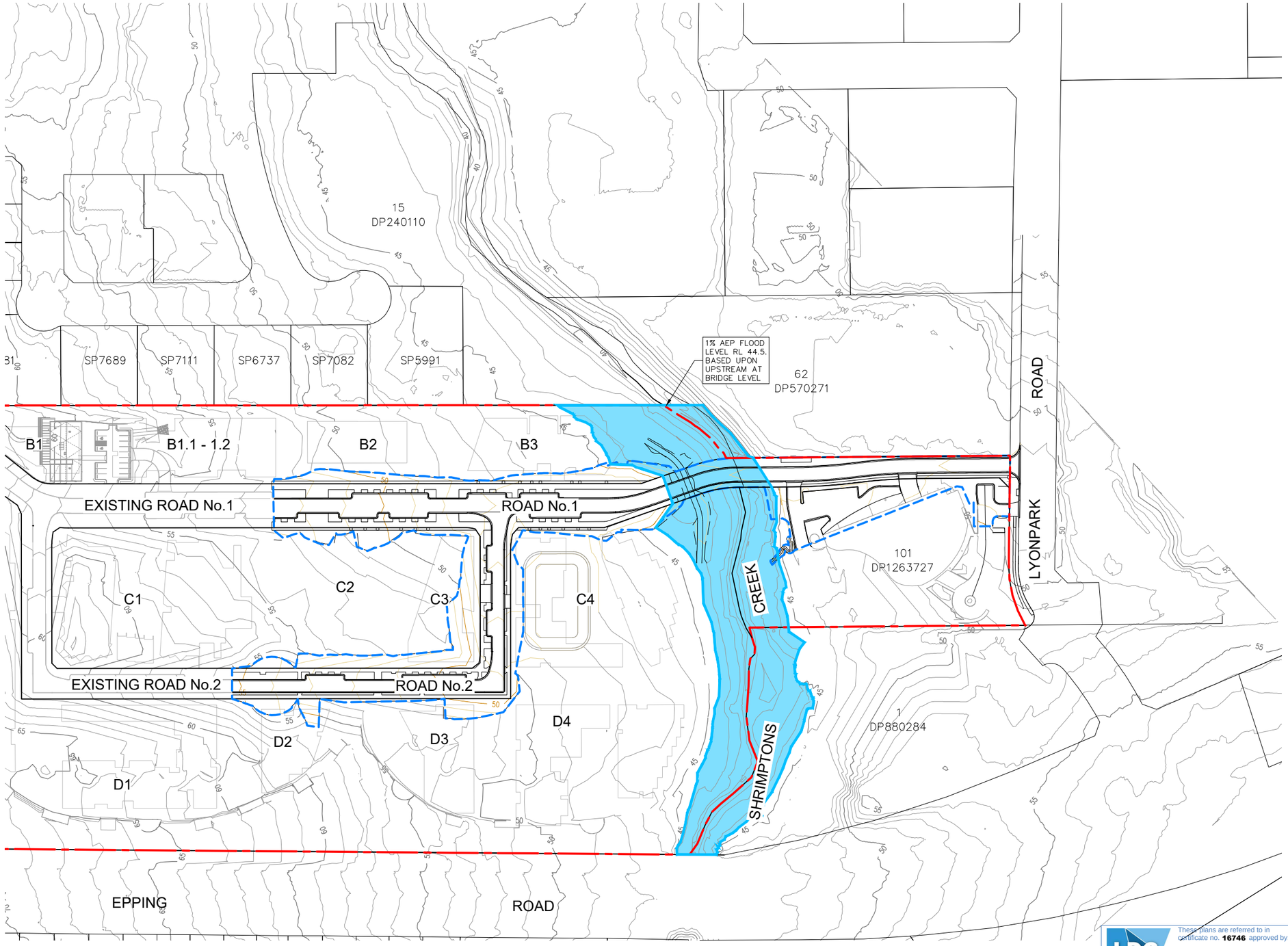

FLOOD EXTENTS PLAN

SCALE 1:1000

MGA

LEGEND

- SITE BOUNDARY
- LIMIT OF WORKS BOUNDARY
- PROPOSED LOT BOUNDARY
- EXISTING LOT BOUNDARY
- FUTURE WORKS
- APPROXIMATE 1% AEP FLOOD EXTENTS

GENERAL NOTES:–

1. BUILDING LAYOUTS SHOWN FOR INFORMATION ONLY.
2. REFER TO FLOOD REPORT BY BMT FOR FLOOD DETAILS.

These plans are referred to in certificate no. **16746** approved by:

Eric Hausfeld
Registered Certifier

Registration No: BDC 2416

Categories: Certifier – Subdivision
Certifier – Strata
Certifier – Stormwater
Certifier – Road & Drainage
Certifier – Hydraulic (stormwater)

Land Development Certificates
www.LDC.com.au

DIAL 1100 BEFORE YOU DIG

CONSTRUCTION ISSUE

REV.	DATE	AMENDMENT	DESIGN	DRAWN	CHECKED	APPROVED
1	21.01.22	ISSUED FOR CONSTRUCTION	B.M.	J.J.	B.M.	B.M.

SCALES: A1 1:1000 — 0 25 50m — A3 1:2000

DESIGN FILE S:\300001\DESIGN\12D\STAGE 2 CC\DESIGN FILE.project

ALL DIMENSIONS ARE IN METRES. DO NOT SCALE

adw Johnson
Central Coast
5 Pioneer Avenue,
P.O. Box 3717,
Tuggerah N.S.W. 2259
Phone: (02) 4305 4300
Fax: (02) 4305 4399
email: coast@adwjohnson.com.au
www.adwjohnson.com.au
ABN 62 129 445 398

CLIENT: FRASERS PROPERTY

PROPERTY DESCRIPTION: LOT 100 D.P.1262209 & LOT 1 D.P.859537
EPPING ROAD & LYONPARK ROAD,
MACQUARIE PARK
SSDA 8903

SURVEYED: ADW Johnson

DATUM: GDA94 M.G.A. ZONE 56 A.H.D.

PROJECT: PROPOSED SUBDIVISION

PLAN TITLE: FLOOD EXTENTS PLAN

PROJECT No.	DISCIPLINE	NUMBER	REV.
300001(2) –	ENG –	007	1

Plotted By: Ben Myles Plot Date: 21/01/22 2:28:01PM Cad File: S:\300001\DRAWINGS\ENGINEERING\CIVIL\STAGE 2 CC ENG\300001(2)-ENG-007.DWG

100mm AT FULL SIZE

This plan includes coloured information. If you have a black and white copy you do not have all of the information. This note is coloured RED.

300001(2)-ENG-101

GENERAL NOTES: –

1. FOR TYPICAL ROAD CROSS SECTIONS, KERB PROFILES REFER SHEET 201 AND PAVEMENT DETAILS REFER TO SHEET 151.
2. SETOUT INFORMATION IS TO BE VERIFIED BY THE CONTRACTOR AGAINST THE PLAN VIEW, LONGITUDINAL SECTIONS AND ELECTRONIC 12D DATA BEFORE BEING USED. IF THERE IS A DISCREPANCY THE SUPERINTENDENT IS TO BE NOTIFIED AND DIRECTION TO BE PROVIDED IN WRITING BEFORE PROCEEDING.
3. REFER TO SHEET 901 FOR COMBINED SERVICES PLAN.
4. REFER DRAWINGS PREPARED BY R.A.R.I. FOR SEWER AND WATER DETAILS.

These plans are referred to in certificate no. **16746** approved by:
Eric Hausfeld
Registered Certifier
Registration No: BDC 2416
Categories: Certifier – Subdivision; Certifier – Strata; Certifier – Stormwater; Certifier – Road & Drainage; Certifier – Hydraulic (stormwater)
Land Development Certificates
www.LDC.com.au

MGA

LEGEND
- WORKS SUBJECT TO ROADS ACT APPROVAL
- SITE BOUNDARY
- LIMIT OF WORKS BOUNDARY
- PROPOSED LOT BOUNDARY
- EXISTING LOT BOUNDARY
- MAJOR CONTOURS
- MINOR CONTOURS
- PROPOSED KERB
- EXISTING KERB
- PROPOSED SAWCUT
- EXTENTS OF BATTER
- PROPOSED PAVED FOOTPATH
- PROPOSED CONCRETE FOOTPATH
- PROPOSED RETAINING WALL
- PROPOSED STORMWATER
- S — PROPOSED SEWER
- ex sw — EXISTING STORMWATER
- ex s — EXISTING SEWER
- ex w — EXISTING WATER
- ex t — EXISTING TELSTRA
- ex e — EXISTING ELECTRICITY
- ex g — EXISTING GAS
- FSW — FUTURE STORMWATER
- TEMPORARY BERM
- PROPOSED SW PIT
- PROPOSED LINTEL
- PROPOSED HEADWALL
- 1\1 — PIT LABEL

CONTOUR INTERVAL = 0.5m

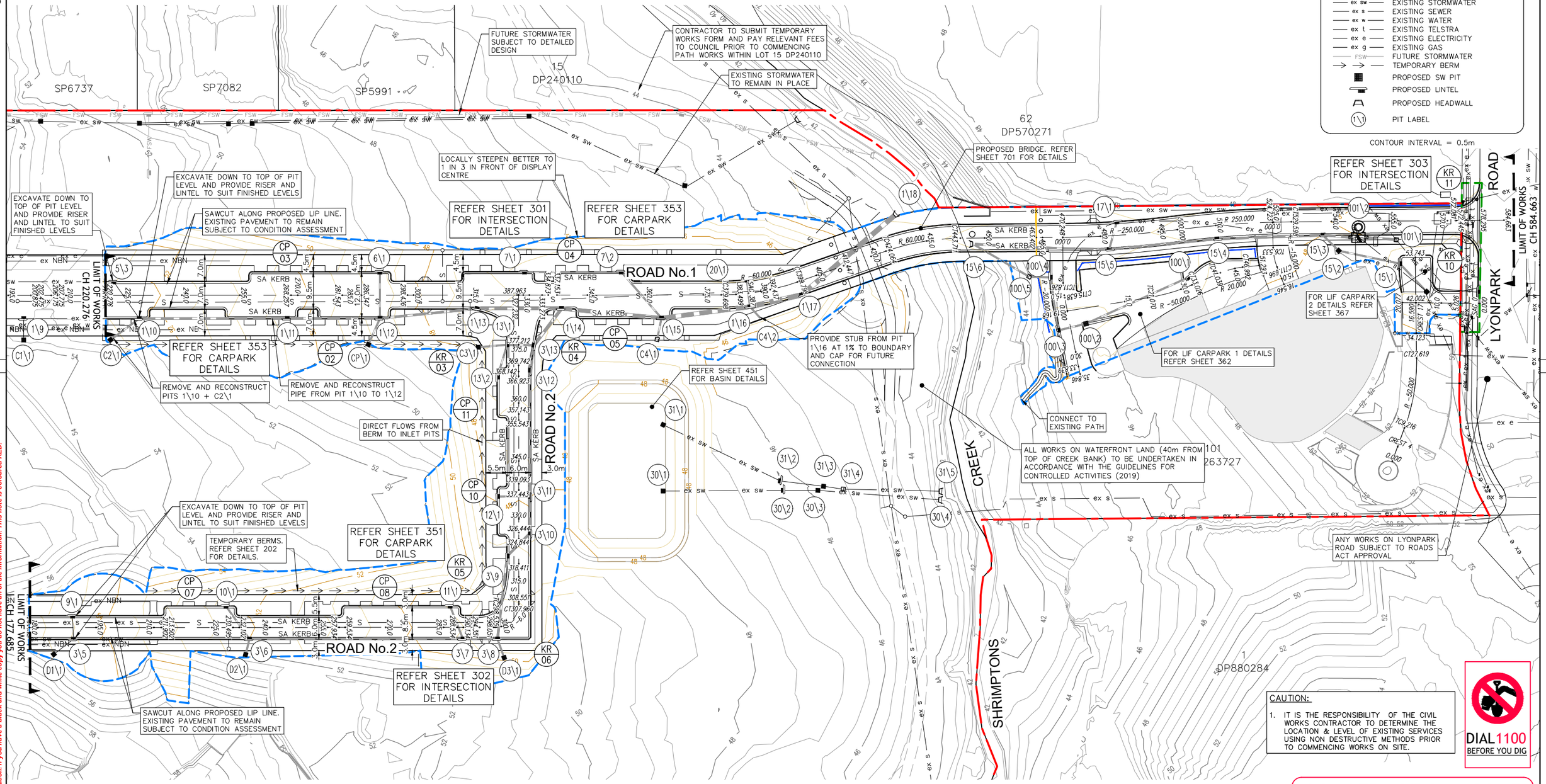

CAUTION:
1. IT IS THE RESPONSIBILITY OF THE CIVIL WORKS CONTRACTOR TO DETERMINE THE LOCATION & LEVEL OF EXISTING SERVICES USING NON DESTRUCTIVE METHODS PRIOR TO COMMENCING WORKS ON SITE.

DIAL 1100 BEFORE YOU DIG

DETAIL PLAN
SCALE 1:500

CONSTRUCTION ISSUE

REV.	DATE	AMENDMENT	DESIGN	DRAWN	CHECKED	APPROVED
1	21.01.22	ISSUED FOR CONSTRUCTION	B.M.	J.J.	B.M.	B.M.

SCALES: A1 1:500 — 0 12.5 25.0m — A3 1:1000

ALL DIMENSIONS ARE IN METRES. DO NOT SCALE

DESIGN FILE S:\300001\DESIGN\12D\STAGE 2 CC\DESIGN FILE.project

adw Johnson
Central Coast
5 Pioneer Avenue,
P.O. Box 3717,
Tuggerah N.S.W. 2259
Phone: (02) 4305 4300
Fax: (02) 4305 4399
email: coast@adwjohnson.com.au
www.adwjohnson.com.au
ABN 62 129 445 398

CLIENT: FRASERS PROPERTY

PROPERTY DESCRIPTION
LOT 100 D.P.1262209 & LOT 1 D.P.859537
EPPING ROAD & LYONPARK ROAD,
MACQUARIE PARK
SSDA 8903

SURVEYED: ADW Johnson
DATUM: GDA94 M.G.A. ZONE 56 A.H.D.

PROJECT: PROPOSED SUBDIVISION
PLAN TITLE: DETAIL PLAN

PROJECT No.	DISCIPLINE	NUMBER	REV.
300001(2) –	ENG –	101	1

Plotted By: Ben Myles Plot Date: 21/01/22 2:28:07PM Cad File: S:\300001\DRAWINGS\ENGINEERING\CIVIL\STAGE 2 CC ENG\300001(2)-ENG-101.DWG

100mm AT FULL SIZE
This plan includes coloured information. If you have a black and white copy you do not have all of the information. This note is coloured RED.

300001(2)-ENG-151

LEGEND

- WORKS SUBJECT TO ROADS ACT APPROVAL
- LIMIT OF WORKS BOUNDARY
- PROPOSED LOT BOUNDARY
- EXISTING LOT BOUNDARY
- PAVEMENT TYPE 1 EXTENT — STANDARD ROAD PAVEMENT
- PAVEMENT TYPE 3 EXTENT — GRANITE PAVING – ROAD
- PAVEMENT TYPE 4 EXTENT — GRANITE PAVING – VERGE
- PAVEMENT TYPE 5 EXTENT — CARPARK PAVEMENT
- PAVEMENT TYPE 6 EXTENT — EXISTING PAVEMENT
- PAVEMENT TYPE 7 EXTENT — CONCRETE PAVEMENT
- PAVEMENT TYPE 8 EXTENT — BRIDGE
- EXTENT OF A15 POLYMER BINDER
- VERGE – TURF (REFER TO LANDSCAPE ARCHITECTS PLANS FOR LAYOUT)

M.G.A.

GENERAL NOTES: –

1. FOR TYPICAL ROAD CROSS SECTIONS & KERB PROFILES REFER SHEET 201.
2. SETOUT INFORMATION IS TO BE VERIFIED BY THE CONTRACTOR AGAINST THE PLAN VIEW, LONGITUDINAL SECTIONS AND ELECTRONIC 12D DATA BEFORE BEING USED. IF THERE IS A DISCREPANCY THE SUPERINTENDENT IS TO BE NOTIFIED AND DIRECTION TO BE PROVIDED IN WRITING BEFORE PROCEEDING.
3. PAVEMENT DESIGNS BASED UPON REPORTS PREPARED BY DOUGLAS PARTNERS REFERENCES "86043.10" DATED JUNE 2021 "86043.03" DATED 13 AUGUST 2020 & "86043.11.Rev0" DATED 12TH AUGUST 2021.
4. PAVEMENT TO BE CONSTRUCTED IN ACCORDANCE WITH THE ABOVEMENTIONED REPORT. SUBJECT TO ONSITE TESTING AND VERIFICATION.

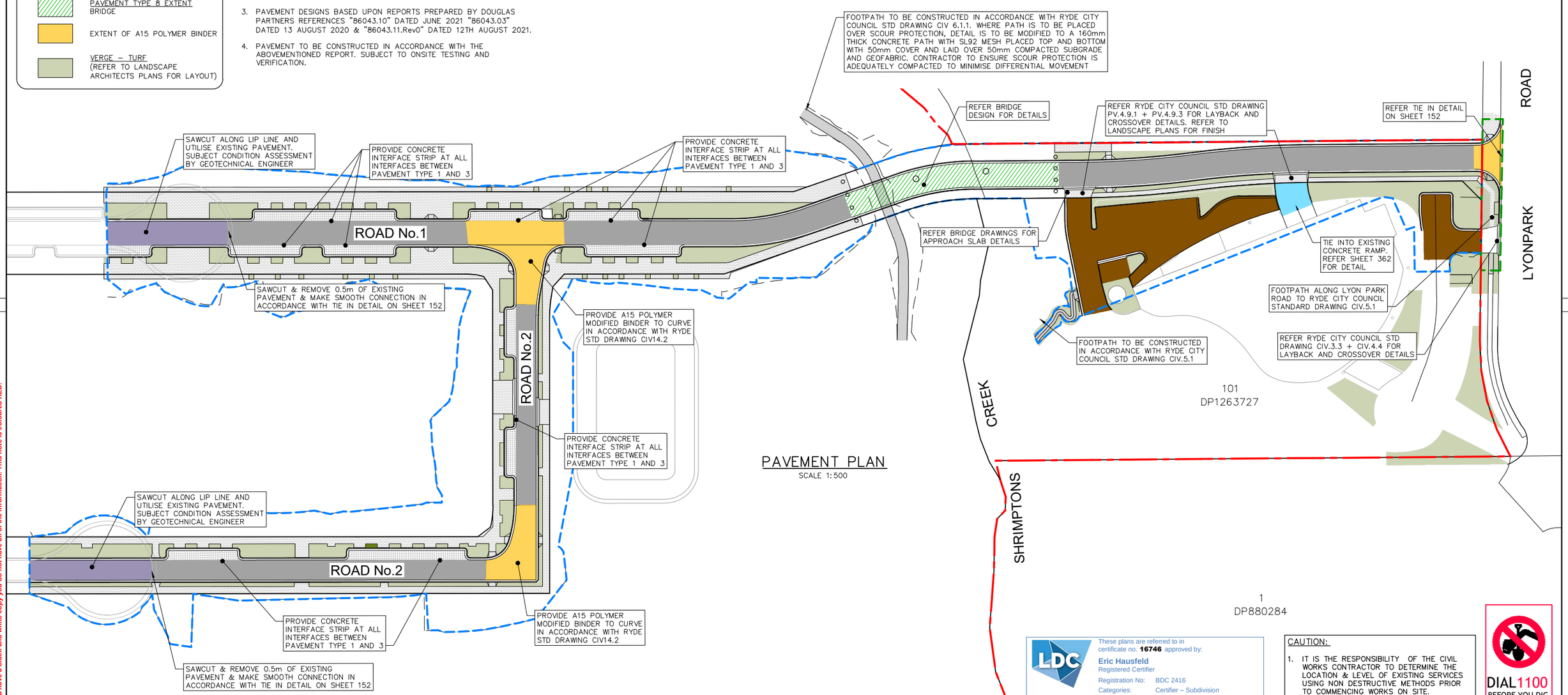

PAVEMENT PLAN

SCALE 1:500

These plans are referred to in certificate no. **16746** approved by:
Eric Hausfeld
Registered Certifier
Registration No: BDC 2416
Categories: Certifier – Subdivision; Certifier – Strata; Certifier – Stormwater; Certifier – Road & Drainage; Certifier – Hydraulic (stormwater)
Land Development Certificates
www.LDC.com.au

CAUTION:

1. IT IS THE RESPONSIBILITY OF THE CIVIL WORKS CONTRACTOR TO DETERMINE THE LOCATION & LEVEL OF EXISTING SERVICES USING NON DESTRUCTIVE METHODS PRIOR TO COMMENCING WORKS ON SITE.

DIAL 1100 BEFORE YOU DIG

CONSTRUCTION ISSUE

REV.	DATE	AMENDMENT	DESIGN	DRAWN	CHECKED	APPROVED
1	21.01.22	ISSUED FOR CONSTRUCTION	B.M.	J.J.	B.M.	B.M.

SCALES: A1 1:500 — 0 12.5 25.0m — A3 1:1000

DESIGN FILE S:\300001\DESIGN\12D\STAGE 2 CC\DESIGN FILE.project

ALL DIMENSIONS ARE IN METRES. DO NOT SCALE

adw Johnson
Central Coast
5 Pioneer Avenue,
P.O. Box 3717,
Tuggerah N.S.W. 2259
Phone: (02) 4305 4300
Fax: (02) 4305 4399
email: coast@adwjohnson.com.au
www.adwjohnson.com.au
ABN 62 129 445 398

CLIENT: FRASERS PROPERTY

PROPERTY DESCRIPTION: LOT 100 D.P.1262209 & LOT 1 D.P.859537
EPPING ROAD & LYONPARK ROAD,
MACQUARIE PARK
SSDA 8903

SURVEYED: ADW Johnson
DATUM: GDA94 M.G.A. ZONE 56 A.H.D.

PROJECT: PROPOSED SUBDIVISION

PLAN TITLE: PAVEMENT PLAN

PROJECT No.	DISCIPLINE	NUMBER	REV.
300001(2) –	ENG –	151	1

Plotted By: Ben Myles Plot Date: 21/01/22 2:28:11PM Cad File: S:\300001\DRAWINGS\ENGINEERING\CIVIL\STAGE 2 CC ENG\300001(2)-ENG-151.DWG

100mm AT FULL SIZE

This plan includes coloured information. If you have a black and white copy you do not have all of the information. This note is coloured RED.

300001(2)-ENG-152

GENERAL NOTES: –

1. FOR TYPICAL ROAD CROSS SECTIONS & KERB PROFILES REFER SHEET 201.
2. SETOUT INFORMATION IS TO BE VERIFIED BY THE CONTRACTOR AGAINST THE PLAN VIEW, LONGITUDINAL SECTIONS AND ELECTRONIC 12D DATA BEFORE BEING USED. IF THERE IS A DISCREPANCY THE SUPERINTENDENT IS TO BE NOTIFIED AND DIRECTION TO BE PROVIDED IN WRITING BEFORE PROCEEDING.
3. PAVEMENT DESIGNS BASED UPON REPORTS PREPARED BY DOUGLAS PARTNERS REFERENCES "86043.10" DATED JUNE 2021 "86043.03" DATED 13 AUGUST 2020 & "86043.11.Rev0" DATED 12TH AUGUST 2021.
4. PAVEMENT TO BE CONSTRUCTED IN ACCORDANCE WITH THE ABOVEMENTIONED REPORT. SUBJECT TO ONSITE TESTING AND VERIFICATION.

SUBGRADE NOTES: –

- THE EXISTING SUBGRADE WHERE CONSIDERED TO BE 'UNCONTROLLED' IS TO BE STRIPPED BACK TO NATURAL MATERIAL. RETAIN THE EXCAVATED MATERIAL IN SEPARATE STOCKPILES FOR ASSESSMENT FOR POSSIBLE RE–USE.
- COMPACT STIFF CLAY SUBGRADE TO 100% STANDARD COMPACTION (CBR 6–10%) IN ACCORDANCE WITH REQUIREMENTS IN GEOTECH REPORT No.86043.02.R.001 (Rev0).
- PLACE APPROVED COMPACTABLE FILL MATERIAL (TO BE APPROVED BY QUALIFIED GEOTECHNICAL ENGINEER) IN 250mm LOOSE LAYERS AND COMPACTED TO 100% STANDARD COMPACTION (CBR 6–10%) IN ACCORDANCE WITH REQUIREMENTS IN GEOTECH REPORT No.86043.02.R.001 (Rev0).
- COMPACTED SUBGRADE TO BE INSPECTED AND VERIFIED BY A GEOTECHNICAL DESIGN REPRESENTATIVE DURING THE TIME OF COMPACTION. GEOTECHNICAL ENGINEER CONFIRMATION OF THE PAVEMENT DESIGN TO BE PROVIDED TO THE PRINCIPAL CERTIFIER FOLLOWING CBR TESTING OF THE SUBGRADE PRIOR TO PLACEMENT OF PAVEMENT MATERIALS.

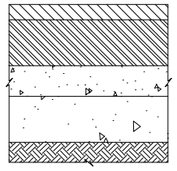

PAVEMENT TYPE 1 – STANDARD ROAD PAVEMENT*

N.T.S.

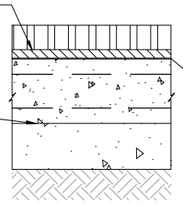

PAVEMENT TYPE 3 – GRANITE PAVERS – ROAD

N.T.S.

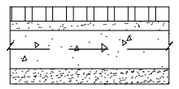

PAVEMENT TYPE 4 – GRANITE PAVERS VERGE

N.T.S.

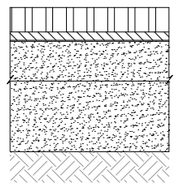

PAVEMENT TYPE 5 – PAVERS – LIF CARPARK

N.T.S.

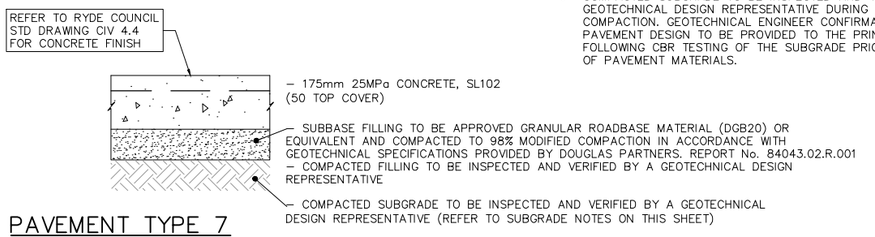

PAVEMENT TYPE 7 – CONCRETE PAVEMENT

N.T.S.

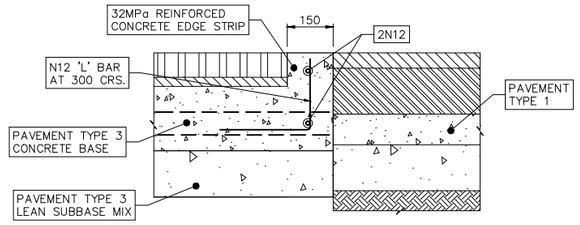

INTERFACE STRIP DETAIL

N.T.S.

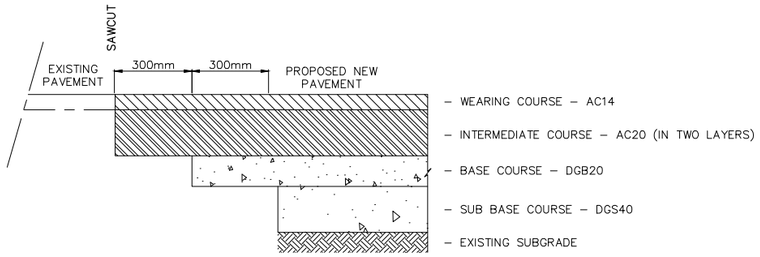

TYPICAL TIE IN DETAIL

N.T.S

TABLE OF PAVEMENT

ROAD	TREATMENT LAYER	SUBBASE	BASECOURSE	INTERMEDIATE LAYER	WEARING COURSE	TOTAL
PAVEMENT TYPE 1 (CBR 10%)	–	150mm	100mm	150mm	50mm	450mm
PAVEMENT TYPE 1A (CBR 6%)	200mm	150mm	100mm	170mm	50mm	670mm
PAVEMENT TYPE 3 (CBR 6–10%)	–	150mm	210mm	30mm	80mm	470mm
PAVEMENT TYPE 4 (CBR 6–10%)	–	50mm	125mm	30mm	60mm	265mm
PAVEMENT TYPE 5 (CBR 4%)	–	320mm	120mm	20mm	80mm	530mm
PAVEMENT TYPE 5 (CBR 6%)	–	230mm	120mm	20mm	80mm	450mm
PAVEMENT TYPE 7 (CBR 6%)		100mm	175mm	–	–	275mm

DIAL 1100 BEFORE YOU DIG

CONSTRUCTION ISSUE

These plans are referred to in certificate no. **16746** approved by:
Eric Hausfeld
Registered Certifier
Registration No: BDC 2416
Categories: Certifier – Subdivision, Certifier – Strata, Certifier – Stormwater, Certifier – Road & Drainage, Certifier – Hydraulic (stormwater)
Land Development Certificates
www.LDC.com.au

REV.	DATE	AMENDMENT	DESIGN	DRAWN	CHECKED	APPROVED
1	21.01.22	ISSUED FOR CONSTRUCTION	B.M.	J.J.	B.M.	B.M.

SCALES: NOT TO SCALE

DESIGN FILE S:\300001\DESIGN\12D\STAGE 2 CC\DESIGN FILE.project

ALL DIMENSIONS ARE IN METRES. DO NOT SCALE

adw Johnson
Central Coast
5 Pioneer Avenue,
P.O. Box 3717,
Tuggerah N.S.W. 2259
Phone: (02) 4305 4300
Fax: (02) 4305 4399
email: coast@adwjohnson.com.au
www.adwjohnson.com.au
ABN 62 129 445 398

CLIENT: FRASERS PROPERTY

PROPERTY DESCRIPTION: LOT 100 D.P.1262209 & LOT 1 D.P.859537, EPPING ROAD & LYONPARK ROAD, MACQUARIE PARK, SSDA 8903

SURVEYED: ADW Johnson
DATUM: GDA94 M.G.A. ZONE 56 A.H.D.

PROJECT: PROPOSED SUBDIVISION
PLAN TITLE: PAVEMENT DETAILS

PROJECT No.	DISCIPLINE	NUMBER	REV.
300001(2) –	ENG –	152	1

Plotted By: Ben Myles Plot Date: 21/01/22 2:28:15PM Cad File: S:\300001\DRAWINGS\ENGINEERING\CIVIL\STAGE 2 CC ENG\300001(2)–ENG–152.DWG

100mm AT FULL SIZE

This plan includes coloured information. If you have a black and white copy you do not have all of the information. This note is coloured RED.

300001(2)-ENG-181

GENERAL NOTES: –

1. THIS PLAN SHOWS LANDSCAPE AND RETAINING WALL SUBSOIL LOCATIONS ONLY. CONTRACTOR TO PROVIDE SUBSOIL DRAINAGE UNDER KERBS IN ACCORDANCE WITH RYDE COUNCIL STANDARD DRAWINGS SWD.2.
2. FLUSHING POINTS THROUGH CENTRE OF ALL PLANTING AREAS TO BE PROVIDED IN ACCORDANCE WITH SWD.2.

MGA

LEGEND

- SITE BOUNDARY
- PROPOSED LOT BOUNDARY
- EXISTING LOT BOUNDARY
- MAJOR CONTOURS
- MINOR CONTOURS
- PROPOSED KERB
- EXISTING KERB
- PROPOSED STORMWATER
- RETAINING WALL
- SW — PROPOSED STORMWATER
- ex sw — EXISTING STORMWATER
- PROPOSED SW PIT
- PROPOSED LINTEL
- PROPOSED HEADWALL
- SS — PROPOSED SUBSOIL DRAINAGE
- SUBSOIL FLOW DIRECTION
- FLUSHING POINT

CONTOUR INTERVAL = 0.5m

These plans are referred to in certificate no. **16746** approved by:
Eric Hausfeld
Registered Certifier
Registration No: BDC 2416
Categories: Certifier – Subdivision; Certifier – Strata; Certifier – Stormwater; Certifier – Road & Drainage; Certifier – Hydraulic (stormwater)
Land Development Certificates
www.LDC.com.au

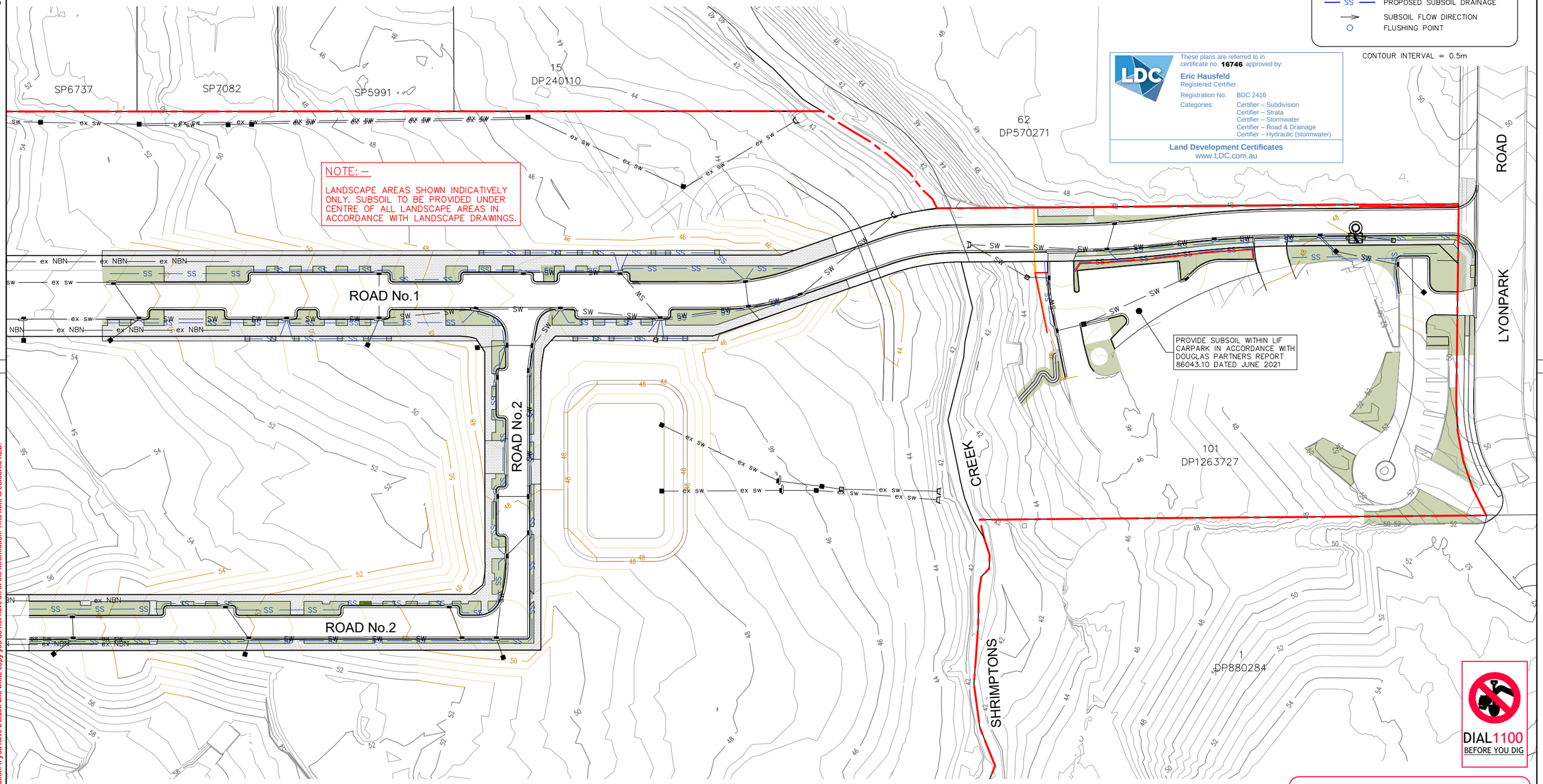

DIAL 1100 BEFORE YOU DIG

SUBSOIL DRAINAGE PLAN

SCALE 1:500

CONSTRUCTION ISSUE

REV.	DATE	AMENDMENT	DESIGN	DRAWN	CHECKED	APPROVED
1	21.01.22	ISSUED FOR CONSTRUCTION	B.M.	J.J.	B.M.	B.M.

SCALES: A1 1:500 — 0 12.5 25.0m — A3 1:1000

DESIGN FILE S:\300001\DESIGN\12D\STAGE 2 CC\DESIGN FILE.project

ALL DIMENSIONS ARE IN METRES. DO NOT SCALE

adw Johnson
Central Coast
5 Pioneer Avenue,
P.O. Box 3717,
Tuggerah N.S.W. 2259
Phone: (02) 4305 4300
Fax: (02) 4305 4399
email: coast@adwjohnson.com.au
www.adwjohnson.com.au
ABN 62 129 445 398

CLIENT: FRASERS PROPERTY

PROPERTY DESCRIPTION: LOT 100 D.P.1262209 & LOT 1 D.P.859537
EPPING ROAD & LYONPARK ROAD,
MACQUARIE PARK
SSDA 8903

SURVEYED: ADW Johnson
DATUM: GDA94 M.G.A. ZONE 56 A.H.D.

PROJECT: PROPOSED SUBDIVISION

PLAN TITLE: SUBSOIL DRAINAGE PLAN

PROJECT No.	DISCIPLINE	NUMBER	REV.
300001(2) –	ENG –	181	1

Plotted By: Ben Myles Plot Date: 21/01/22 2:28:20PM Cad File: S:\300001\DRAWINGS\ENGINEERING\CIVIL\STAGE 2 CC ENG\300001(2)-ENG-181.DWG

100mm AT FULL SIZE

This plan includes coloured information. If you have a black and white copy you do not have all of the information. This note is coloured RED.

300001(2)-ENG-201

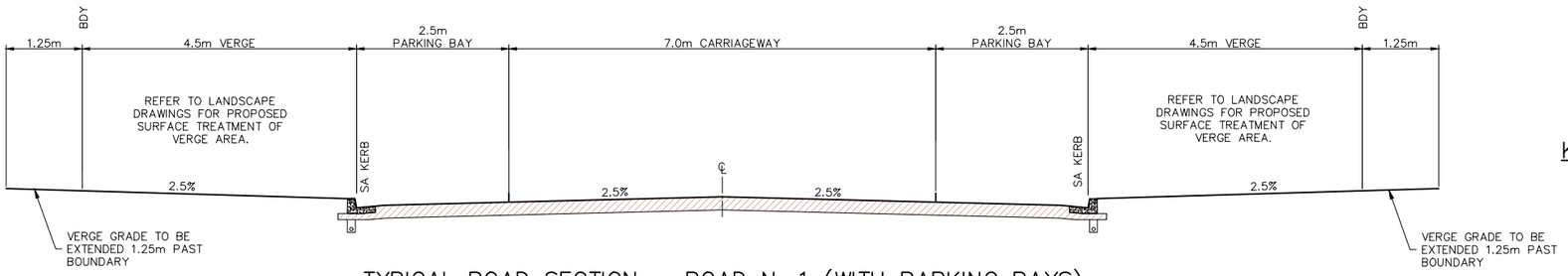

TYPICAL ROAD SECTION – ROAD No.1 (WITH PARKING BAYS)

SCALE 1 : 50

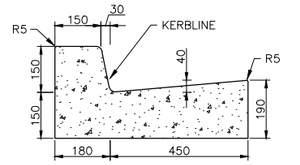

KERB AND GUTTER (SA)

NOT TO SCALE

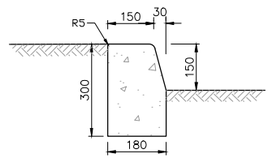

KERB ONLY (KO)

NOT TO SCALE

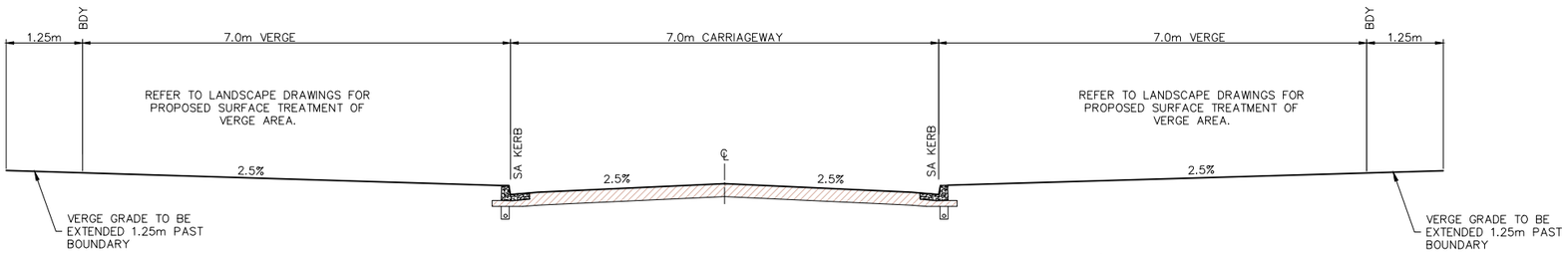

TYPICAL ROAD SECTION – ROAD No.1 (WITHOUT PARKING BAYS)

SCALE 1 : 50

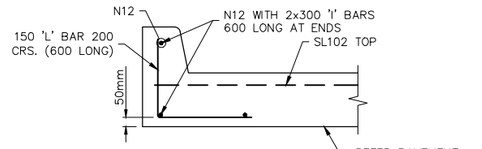

INTEGRAL KERB (IK)

SCALE 1:10

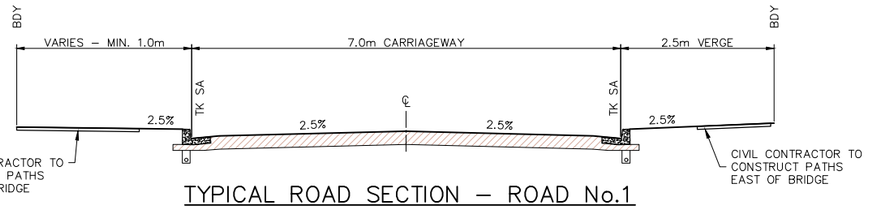

TYPICAL ROAD SECTION – ROAD No.1 (BRIDGE TO LYON PARK ROAD)

SCALE 1 : 50

REFER SHEET 701 FOR BRIDGE DESIGN DETAILS

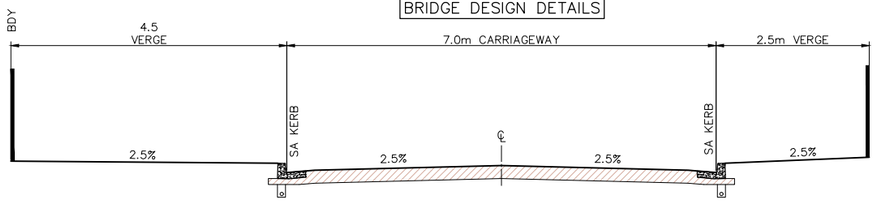

TYPICAL ROAD SECTION – ROAD No.1 (BRIDGE)

SCALE 1 : 50

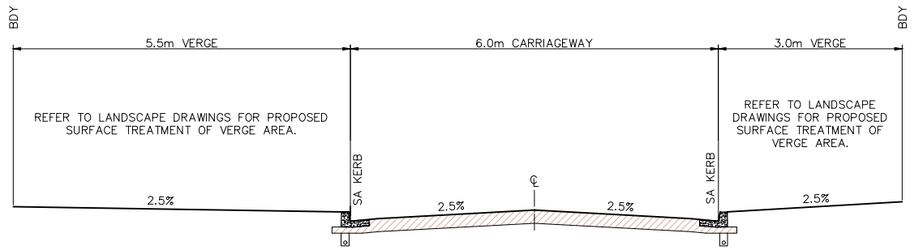

TYPICAL ROAD SECTION – ROAD No.2 (WITHOUT PARKING BAYS)

SCALE 1 : 50

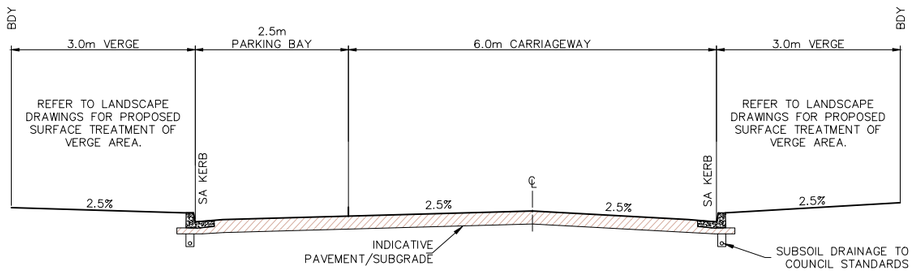

TYPICAL ROAD SECTION – ROAD No.2 (WITH PARKING BAYS)

SCALE 1 : 50

These plans are referred to in certificate no. **16746** approved by:

Eric Hausfeld
Registered Certifier

Registration No: BDC 2416

Categories: Certifier – Subdivision
Certifier – Strata
Certifier – Stormwater
Certifier – Road & Drainage
Certifier – Hydraulic (stormwater)

Land Development Certificates
www.LDC.com.au

DIAL 1100 BEFORE YOU DIG

CONSTRUCTION ISSUE

REV.	DATE	AMENDMENT	DESIGN	DRAWN	CHECKED	APPROVED
1	21.01.22	ISSUED FOR CONSTRUCTION	B.M.	J.J.	B.M.	B.M.

SCALES: A1 1:50 — 0 1.25 2.5 m — A3 1:100

DESIGN FILE S:\300001\DESIGN\12D\STAGE 2 CC\DESIGN FILE.project

ALL DIMENSIONS ARE IN METRES. DO NOT SCALE

adw Johnson
Central Coast
5 Pioneer Avenue,
P.O. Box 3717,
Tuggerah N.S.W. 2259
Phone: (02) 4305 4300
Fax: (02) 4305 4399
email: coast@adwjohnson.com.au
www.adwjohnson.com.au
ABN 62 129 445 398

CLIENT: FRASERS PROPERTY

PROPERTY DESCRIPTION: LOT 100 D.P.1262209 & LOT 1 D.P.859537, EPPING ROAD & LYONPARK ROAD, MACQUARIE PARK, SSDA 8903

SURVEYED: ADW Johnson

DATUM: GDA94 M.G.A. ZONE 56 A.H.D.

PROJECT: PROPOSED SUBDIVISION

PLAN TITLE: TYPICAL ROAD PROFILES, KERB DETAILS & ROAD SETOUT TABLES

PROJECT No. 300001(2) – DISCIPLINE ENG – NUMBER 201 REV. 1

Plotted By: Ben Myles Plot Date: 21/01/22 2:28:23PM Cad File: S:\300001\DRAWINGS\ENGINEERING\CIVIL\STAGE 2 CC ENG\300001(2)-ENG-201.DWG

100mm AT FULL SIZE

This plan includes coloured information. If you have a black and white copy you do not have all of the information. This note is coloured RED.

300001(2)-ENG-202

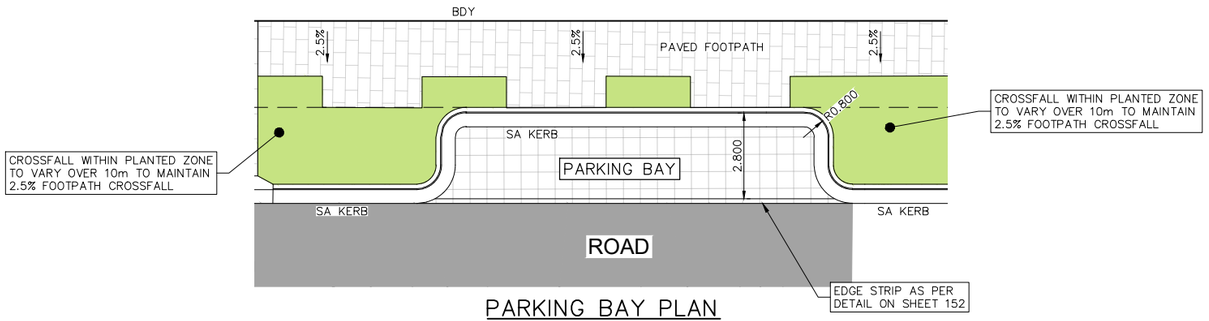

PARKING BAY PLAN

SCALE 1:100

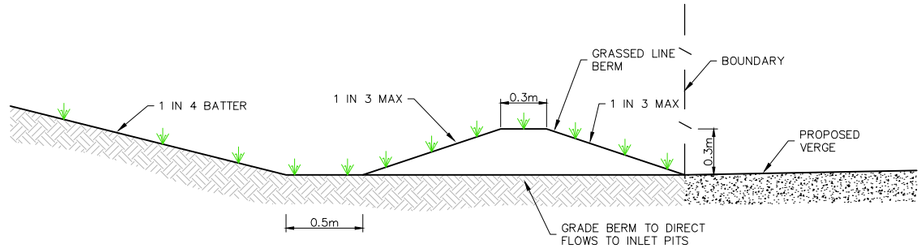

TYPICAL BERM SECTION

NOT TO SCALE

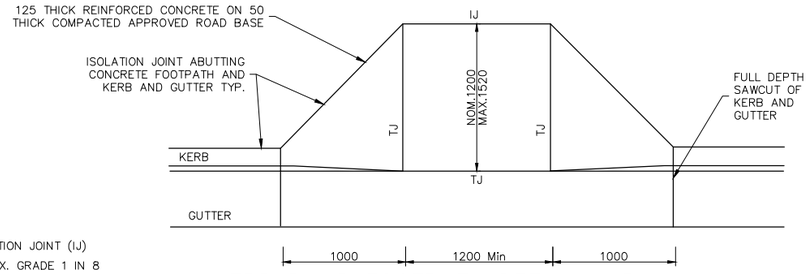

KERB RAMP FOOTPATH DETAIL – PLAN

NOT TO SCALE

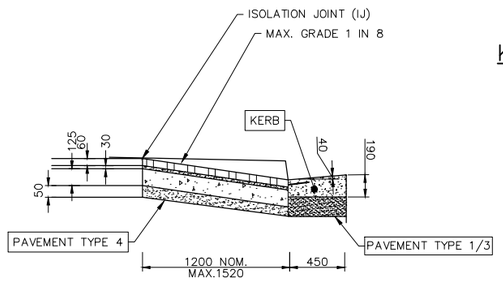

SECTION 1

NOT TO SCALE

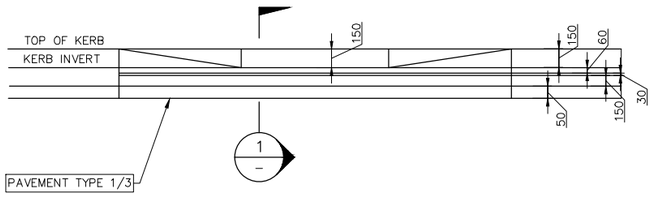

KERB RAMP FOOTPATH DETAIL – ELEVATION

NOT TO SCALE

NOTE:

PRAM RAMPS TO CIV 2.1.2 EXCEPT WHERE MODIFIED BY LANDSCAPE DRAWINGS.

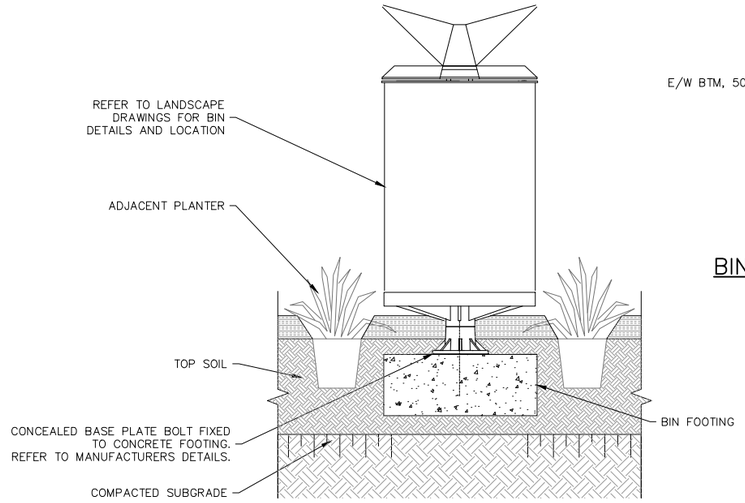

BIN IN PLANTING TYPICAL DETAIL

SCALE 1:10

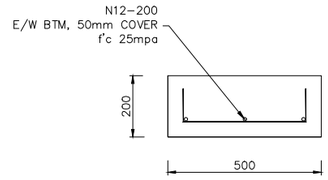

BIN FOOTING DETAIL – SECTION

SCALE 1:10

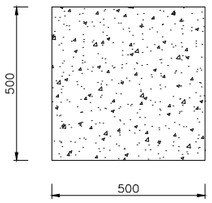

BIN FOOTING DETAIL – PLAN

SCALE 1:10

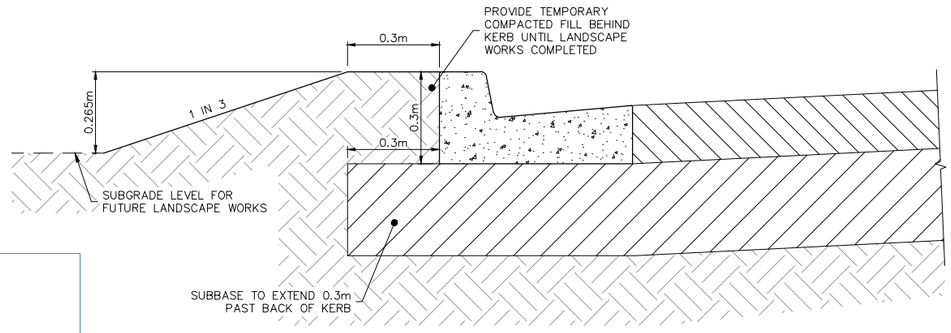

TEMPORARY KERB DETAIL

NOT TO SCALE

These plans are referred to in certificate no. **16746** approved by:

Eric Hausfeld
Registered Certifier

Registration No: BDC 2416

Categories: Certifier – Subdivision
Certifier – Strata
Certifier – Stormwater
Certifier – Road & Drainage
Certifier – Hydraulic (stormwater)

Land Development Certificates
www.LDC.com.au

DIAL 1100 BEFORE YOU DIG

CONSTRUCTION ISSUE

REV.	DATE	AMENDMENT	DESIGN	DRAWN	CHECKED	APPROVED
1	21.01.22	ISSUED FOR CONSTRUCTION	B.M.	J.J.	B.M.	B.M.

SCALES: A1 1:10 (0, 0.25, 0.5m) A3 1:20

DESIGN FILE S:\300001\DESIGN\12D\STAGE 2 CC\DESIGN FILE.project

ALL DIMENSIONS ARE IN METRES. DO NOT SCALE

adw Johnson
Central Coast
5 Pioneer Avenue,
P.O. Box 3717,
Tuggerah N.S.W. 2259
Phone: (02) 4305 4300
Fax: (02) 4305 4399
email: coast@adwjohnson.com.au
www.adwjohnson.com.au
ABN 62 129 445 398

CLIENT: FRASERS PROPERTY

PROPERTY DESCRIPTION: LOT 100 D.P.1262209 & LOT 1 D.P.859537
EPPING ROAD & LYONPARK ROAD,
MACQUARIE PARK
SSDA 8903

SURVEYED: ADW Johnson

DATUM: GDA94 M.G.A. ZONE 56 A.H.D.

PROJECT: PROPOSED SUBDIVISION

PLAN TITLE: KERB RAMP, TEMPORARY BERM & BIN FOOTING DETAILS

PROJECT No.	DISCIPLINE	NUMBER	REV.
300001(2) –	ENG –	202	1

Plotted By: Ben Myles Plot Date: 21/01/22 2:28:26PM Cad File: S:\300001\DRAWINGS\ENGINEERING\CIVIL\STAGE 2 CC ENG\300001(2)-ENG-202.DWG

100mm AT FULL SIZE

This plan includes coloured information. If you have a black and white copy you do not have all of the information. This note is coloured RED.

300001(2)-ENG-211

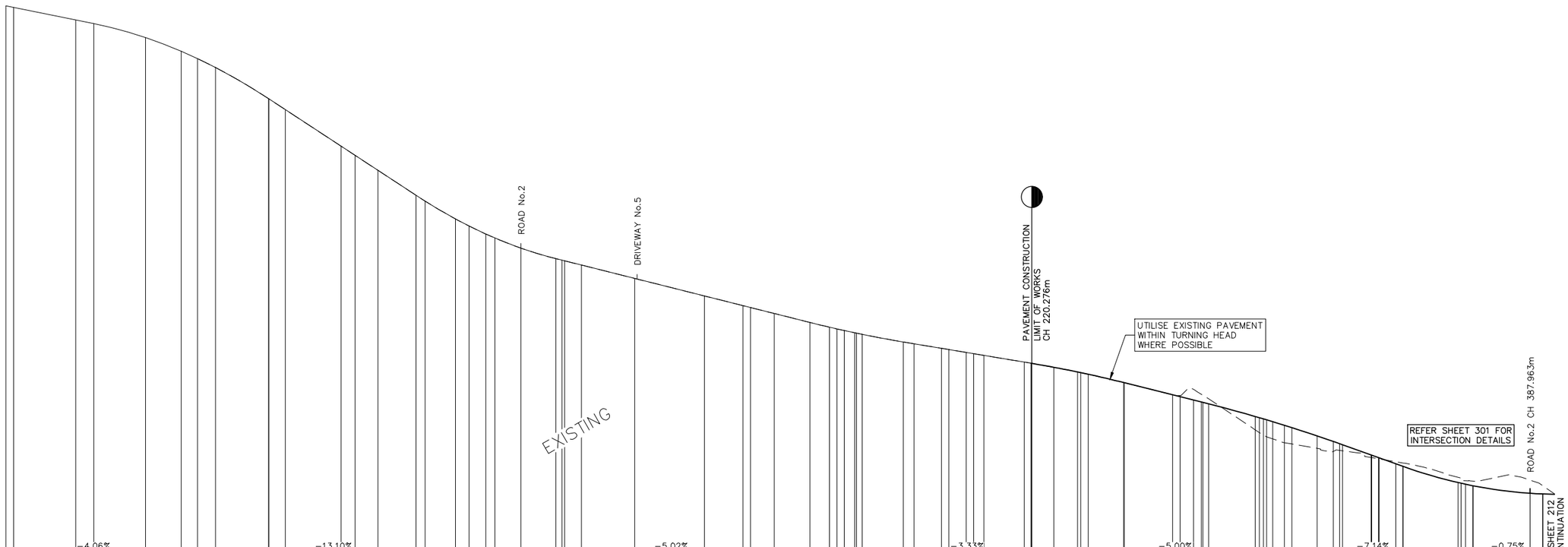

CHAINAGE	DESIGN LEVEL	EXISTING SURFACE	CUT\FILL
0	67.91	67.83	0.08
1.67	67.84	67.72	0.12
15	67.3	67.13	0.17
18.89	67.14	66.97	0.18
30	66.54	66.38	0.16
37.64	65.96	65.91	0.05
41.15	65.64	65.64	0
45	65.26	65.26	0
56.39	63.93	63.93	0
56.48	63.91	63.91	0
60	63.45	63.45	0
71.97	61.88	61.88	0
75	61.49	61.49	0
79.88	60.85	60.85	0
88.07	59.78	59.78	0
90	59.53	59.53	0
96.55	58.76	58.76	0
99.46	58.46	58.46	−0
103.07	58.11	58.11	−0
105	57.94	57.94	0
110.58	57.51	57.51	0
118.07	57.06	57.06	0
119.42	56.99	56.99	0
120	56.96	56.96	0
123.58	56.78	56.78	0
135	56.21	56.21	0
150	55.46	55.46	0
158.26	55.04	55.04	0
159.87	54.96	54.96	0
165	54.7	54.7	0
172.66	54.32	54.32	0
176.86	54.11	54.11	0
178.46	54.04	54.04	0
180	53.97	53.97	0
182.26	53.87	53.87	0
182.66	53.86	53.86	−0
183.86	53.81	53.81	0
192.66	53.48	53.48	0
195	53.4	53.4	0
200.88	53.21	53.21	0
202.47	53.16	53.16	0
206.18	53.03	53.03	0
207.78	52.98	52.98	0
210	52.9	52.9	0
218.68	52.62	52.62	0
220.11	52.57	52.57	0
220.28	52.56	52.56	0
225	52.39	52.39	0
230.11	52.19	52.19	0
230.79	52.16	52.16	0
232.39	52.09	52.1	0
240	51.74	51.74	0
240.11	51.73	51.73	0
250.52	51.21	51.21	−0
252.12	51.18	51.13	−0.05
255	51.45	50.99	−0.46
256.67	51.24	50.91	−0.33
257.01	51.2	50.89	−0.31
258.27	51.04	50.83	−0.21
268.26	49.71	50.28	0.57
269.12	49.6	50.23	0.63
270	49.49	50.18	0.69
270.72	49.41	50.14	0.73
272.01	49.32	50.06	0.74
274.52	49.16	49.9	0.75
276.12	49.1	49.8	0.7
281.54	48.92	49.45	0.53
285	48.78	49.21	0.43
286.35	48.83	49.11	0.29
287.01	48.81	49.07	0.26
293.12	48.52	48.63	0.11
293.27	48.52	48.62	0.1
294.72	48.47	48.52	0.05
294.87	48.46	48.51	0.05
298.44	48.34	48.25	−0.09
299.96	48.29	48.14	−0.14
300	48.28	48.14	−0.15
311.82	47.67	47.45	−0.23
312.44	47.54	47.42	−0.12
313.42	47.53	47.37	−0.15
314.96	47.51	47.31	−0.2
315	47.51	47.31	−0.2
327.23	47.55	46.99	−0.57
329.96	47.31	46.96	−0.36
330	47.31	46.96	−0.35

LONGITUDINAL SECTION ROAD No.1

HORIZONTAL SCALE 1:500
VERTICAL SCALE 1:100

These plans are referred to in certificate no. **16746** approved by:
Eric Hausfeld
Registered Certifier
Registration No: BDC 2416
Categories: Certifier – Subdivision, Certifier – Strata, Certifier – Stormwater, Certifier – Road & Drainage, Certifier – Hydraulic (stormwater)
Land Development Certificates
www.LDC.com.au

DIAL 1100 BEFORE YOU DIG

CONSTRUCTION ISSUE

REV.	DATE	AMENDMENT	DESIGN	DRAWN	CHECKED	APPROVED
1	21.01.22	ISSUED FOR CONSTRUCTION	B.M.	J.J.	B.M.	B.M.

SCALES: A1 1:500 (0, 12.5, 25.0m) A3 1:1000; A1 1:100 (0, 2.5, 5.0m) A3 1:200

DESIGN FILE S:\300001\DESIGN\12D\STAGE 2 CC\DESIGN FILE.project

ALL DIMENSIONS ARE IN METRES. DO NOT SCALE

adw Johnson
Central Coast
5 Pioneer Avenue,
P.O. Box 3717,
Tuggerah N.S.W. 2259
Phone: (02) 4305 4300
Fax: (02) 4305 4399
email: coast@adwjohnson.com.au
www.adwjohnson.com.au
ABN 62 129 445 398

CLIENT: FRASERS PROPERTY

PROPERTY DESCRIPTION: LOT 100 D.P.1262209 & LOT 1 D.P.859537, EPPING ROAD & LYONPARK ROAD, MACQUARIE PARK, SSDA 8903

SURVEYED: ADW Johnson
DATUM: GDA94 M.G.A. ZONE 56 A.H.D.

PROJECT: PROPOSED SUBDIVISION

PLAN TITLE: ROAD LONGITUDINAL SECTIONS, ROAD No.01, SHEET 1

PROJECT No.	DISCIPLINE	NUMBER	REV.
300001(2)	ENG	211	1

Plotted By: Ben Myles Plot Date: 21/01/22 2:28:30PM Cad File: S:\300001\DRAWINGS\ENGINEERING\CIVIL\STAGE 2 CC ENG\300001(2)-ENG-211.DWG

100mm AT FULL SIZE

This plan includes coloured information. If you have a black and white copy you do not have all of the information. This note is coloured RED.

300001(2)-ENG-212

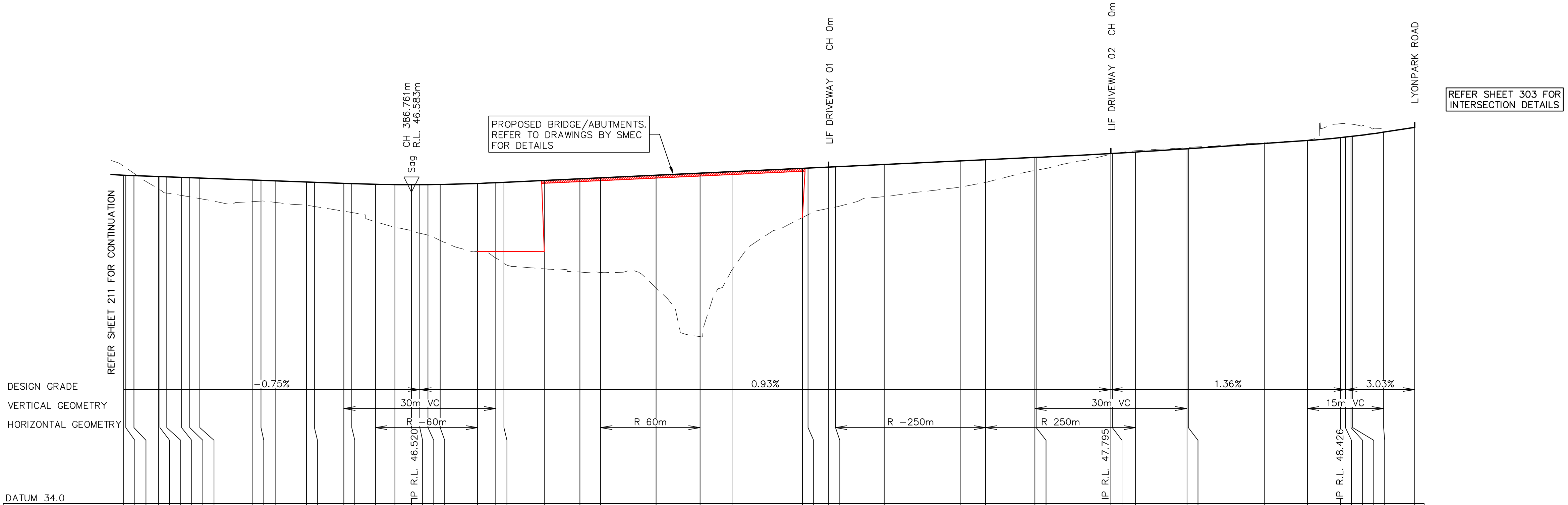

CHAINAGE	DESIGN LEVEL	EXISTING SURFACE	CUT\FILL
330	46.96	47.31	-0.35
330.42	46.96	47.25	-0.3
332.02	46.94	47.03	-0.09
336.86	46.91	46.41	0.49
337.15	46.9	46.38	0.53
338.5	46.89	46.25	0.65
341.43	46.87	46.16	0.72
343.03	46.86	46.1	0.76
345	46.85	46.03	0.81
355.46	46.77	45.91	0.85
357.06	46.76	45.93	0.82
360	46.73	45.88	0.85
366.03	46.69	45.77	0.92
367.63	46.68	45.72	0.95
373.41	46.63	45.54	1.09
375	46.62	45.48	1.14
379.7	46.6	45.12	1.48
383.5	46.59	44.9	1.68
386.76	46.58	44.76	1.82
388.41	46.58	44.67	1.92
390	46.59	44.59	2
392.44	46.59	44.38	2.21
399.8	46.63	43.95	2.68
403.41	46.66	43.69	2.97
405	46.68	43.48	3.2
412.95	46.75	43.26	3.49
420	46.82	43.13	3.68
424.06	46.85	43.12	3.73
435	46.96	42.51	4.45
443.71	47.04	40.58	6.45
450	47.1	43.22	3.88
463.9	47.23	45.29	1.94
465	47.24	45.4	1.84
470.25	47.29	45.64	1.63
470.4	47.29	45.7	1.59
480	47.38	46.11	1.27
495	47.52	46.49	1.03
500	47.56	46.68	0.88
509.72	47.65	47.14	0.51
510	47.66	47.15	0.5
524.72	47.81	47.78	0.03
525	47.81	47.79	0.02
529.6	47.87	47.92	-0.05
539.72	48	48.04	-0.04
540	48	48.05	-0.05
555	48.21	48.24	-0.03
563.5	48.32	48.34	-0.02
570	48.44	48.98	-0.55
571	48.46	49	-0.54
572.08	48.48	48.98	-0.49
572.45	48.49	48.96	-0.47
578.5	48.65	48.64	0.01
584.66	48.84	48.84	0

LONGITUDINAL SECTION ROAD No.1

HORIZONTAL SCALE 1:500
VERTICAL SCALE 1:100

These plans are referred to in certificate no. **16746** approved by:
Eric Hausfeld
Registered Certifier
Registration No: BDC 2416
Categories: Certifier – Subdivision
Certifier – Strata
Certifier – Stormwater
Certifier – Road & Drainage
Certifier – Hydraulic (stormwater)
Land Development Certificates
www.LDC.com.au

DIAL 1100 BEFORE YOU DIG

CONSTRUCTION ISSUE

100mm AT FULL SIZE

This plan includes coloured information. If you have a black and white copy you do not have all of the information. This note is coloured RED.

REV.	DATE	AMENDMENT	DESIGN	DRAWN	CHECKED	APPROVED
1	21.01.22	ISSUED FOR CONSTRUCTION	B.M.	J.J.	B.M.	B.M.

SCALES: A1 1:500 / A3 1:1000 (0, 12.5, 25.0m); A1 1:100 / A3 1:200 (0, 2.5, 5.0m)

DESIGN FILE S:\300001\DESIGN\12D\STAGE 2 CC\DESIGN FILE.project
ALL DIMENSIONS ARE IN METRES. DO NOT SCALE.

adw johnson
Central Coast
5 Pioneer Avenue,
P.O. Box 3717,
Tuggerah N.S.W. 2259
Phone: (02) 4305 4300
Fax: (02) 4305 4399
email: coast@adwjohnson.com.au
www.adwjohnson.com.au
ABN 62 129 445 398

CLIENT: FRASERS PROPERTY

PROPERTY DESCRIPTION
LOT 100 D.P.1262209 & LOT 1 D.P.859537
EPPING ROAD & LYONPARK ROAD,
MACQUARIE PARK
SSDA 8903

PROJECT: PROPOSED SUBDIVISION

PLAN TITLE: ROAD LONGITUDINAL SECTIONS
ROAD No.01
SHEET 2

SURVEYED	DATUM		PROJECT No.	DISCIPLINE	NUMBER	REV.
ADW Johnson	GDA94 M.G.A. ZONE 56	A.H.D.	300001(2) –	ENG –	212	1

Plotted By: Ben Myles Plot Date: 21/01/22 2:28:34PM Cad File: S:\300001\DRAWINGS\ENGINEERING\CIVIL\STAGE 2 CC ENG\300001(2)-ENG-212.DWG

300001(2)-ENG-213

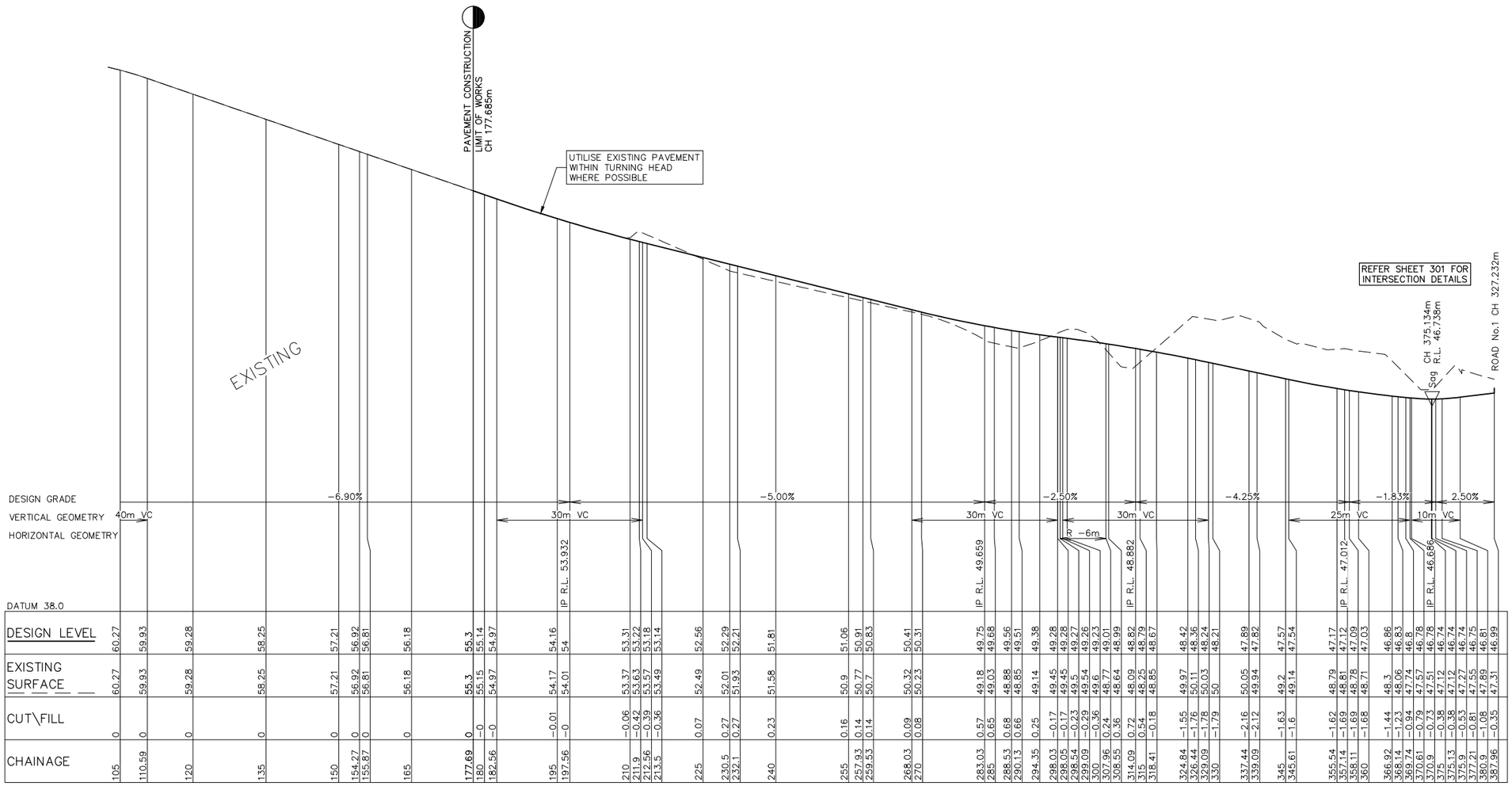

CHAINAGE	DESIGN LEVEL	EXISTING SURFACE	CUT\FILL
105	60.27	60.27	0
110.59	59.93	59.93	0
120	59.28	59.28	0
135	58.25	58.25	0
150	57.21	57.21	0
154.27	56.92	56.92	0
155.87	56.81	56.81	0
165	56.18	56.18	0
177.69	55.3	55.3	0
180	55.14	55.15	−0
182.56	54.97	54.97	−0
195	54.16	54.17	−0.01
197.56	54	54.01	−0
210	53.31	53.37	−0.06
211.9	53.42	53.63	−0.42
212.56	53.18	53.57	−0.39
213.5	53.14	53.49	−0.36
225	52.56	52.49	0.07
230.5	52.29	52.01	0.27
232.1	52.21	51.93	0.27
240	51.81	51.58	0.23
255	51.06	50.9	0.16
257.93	50.91	50.77	0.14
259.53	50.83	50.7	0.14
268.03	50.41	50.32	0.09
270	50.31	50.23	0.08
283.03	49.75	49.18	0.57
285	49.68	49.03	0.65
288.53	49.56	48.88	0.68
290.13	49.51	48.85	0.66
294.35	49.38	49.14	0.25
298.03	49.28	49.45	−0.17
298.05	49.28	49.45	−0.17
298.54	49.27	49.5	−0.23
299.09	49.26	49.54	−0.29
300	49.23	49.6	−0.36
307.96	49.01	48.77	0.24
308.55	48.99	48.64	0.36
314.09	48.82	48.09	0.72
315	48.79	48.25	0.54
318.41	48.67	48.85	−0.18
324.84	48.42	49.97	−1.55
326.44	48.36	50.11	−1.76
329.09	48.24	50.03	−1.78
330	48.21	50	−1.79
337.44	47.89	50.05	−2.16
339.09	47.82	49.94	−2.12
345	47.57	49.2	−1.63
345.61	47.54	49.14	−1.6
355.54	47.17	48.79	−1.62
357.14	47.12	48.81	−1.69
358.11	47.09	48.78	−1.69
360	47.03	48.71	−1.68
366.92	46.86	48.3	−1.44
368.14	46.83	48.06	−1.23
369.74	46.8	47.74	−0.94
370.61	46.78	47.57	−0.79
370.9	46.78	47.51	−0.73
375	46.74	47.12	−0.38
375.13	46.74	47.12	−0.38
375.9	46.74	47.27	−0.53
377.21	46.75	47.55	−0.81
380.9	46.81	47.89	−1.08
387.96	46.99	47.31	−0.35

LONGITUDINAL SECTION ROAD No.2

HORIZONTAL SCALE 1:500
VERTICAL SCALE 1:100

These plans are referred to in certificate no. **16746** approved by:
Eric Hausfeld
Registered Certifier
Registration No: BDC 2416
Categories: Certifier – Subdivision, Certifier – Strata, Certifier – Stormwater, Certifier – Road & Drainage, Certifier – Hydraulic (stormwater)
Land Development Certificates
www.LDC.com.au

DIAL1100 BEFORE YOU DIG

CONSTRUCTION ISSUE

REV.	DATE	AMENDMENT	DESIGN	DRAWN	CHECKED	APPROVED
1	21.01.22	ISSUED FOR CONSTRUCTION	B.M.	J.J.	B.M.	B.M.

SCALES: A1 1:500 (0, 12.5, 25.0m) A3 1:1000; A1 1:100 (0, 2.5, 5.0m) A3 1:200

DESIGN FILE S:\300001\DESIGN\12D\STAGE 2 CC\DESIGN FILE.project

ALL DIMENSIONS ARE IN METRES. DO NOT SCALE

adw Johnson
Central Coast
5 Pioneer Avenue,
P.O. Box 3717,
Tuggerah N.S.W. 2259
Phone: (02) 4305 4300
Fax: (02) 4305 4399
email: coast@adwjohnson.com.au
www.adwjohnson.com.au
ABN 62 129 445 398

CLIENT: FRASERS PROPERTY

PROPERTY DESCRIPTION
LOT 100 D.P.1262209 & LOT 1 D.P.859537
EPPING ROAD & LYONPARK ROAD,
MACQUARIE PARK
SSDA 8903

SURVEYED: ADW Johnson
DATUM: GDA94 M.G.A. ZONE 56 A.H.D.

PROJECT: PROPOSED SUBDIVISION

PLAN TITLE: ROAD LONGITUDINAL SECTIONS ROAD No.02

PROJECT No.	DISCIPLINE	NUMBER	REV.
300001(2)	ENG	213	1

Plotted By: Ben Myles Plot Date: 21/01/22 2:28:38PM Cad File: S:\300001\DRAWINGS\ENGINEERING\CIVIL\STAGE 2 CC ENG\300001(2)-ENG-213.DWG

100mm AT FULL SIZE

This plan includes coloured information. If you have a black and white copy you do not have all of the information. This note is coloured RED.

300001(2)-ENG-231

These plans are referred to in certificate no. **16746** approved by:

Eric Hausfeld
Registered Certifier

Registration No: BDC 2416
Categories: Certifier – Subdivision
Certifier – Strata
Certifier – Stormwater
Certifier – Road & Drainage
Certifier – Hydraulic (stormwater)

Land Development Certificates
www.LDC.com.au

✳ MODIFY CROSS FALL OF PLANTED ZONES TO MAINTAIN 2.5% FOOTPATH

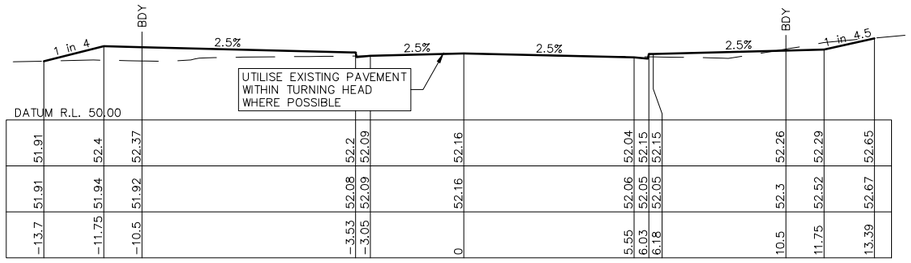

51.91	52.4	52.37	52.2	52.09	52.16	52.04	52.15	52.15	52.26	52.29	52.65
51.91	51.94	51.92	52.08	52.09	52.16	52.06	52.05	52.05	52.3	52.52	52.67
-13.7	-11.75	-10.5	-3.53	-3.05	0	5.55	6.03	6.18	10.5	11.75	13.39

CH 230.79

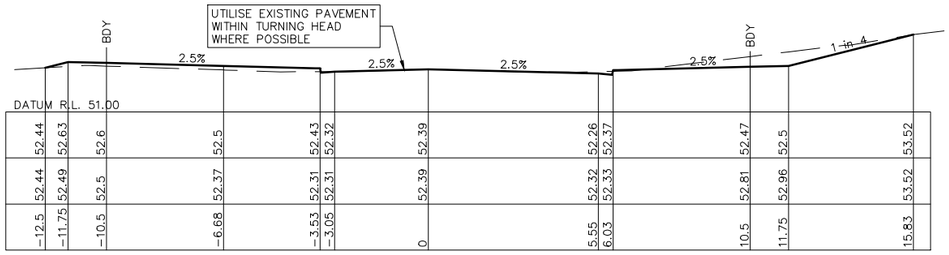

52.44	52.63	52.6	52.5	52.43	52.32	52.39	52.26	52.37	52.47	52.5	53.52
52.44	52.49	52.5	52.37	52.31	52.31	52.39	52.32	52.33	52.81	52.96	53.52
-12.5	-11.75	-10.5	-6.68	-3.53	-3.05	0	5.55	6.03	10.5	11.75	15.83

CH 225

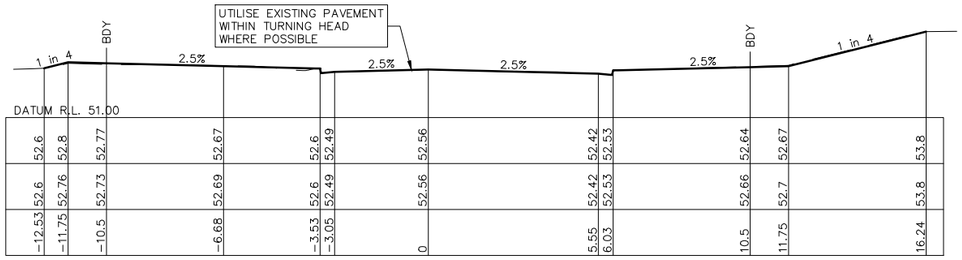

52.6	52.8	52.77	52.67	52.6	52.49	52.56	52.42	52.53	52.64	52.67	53.8
52.6	52.76	52.73	52.69	52.6	52.49	52.56	52.42	52.53	52.66	52.7	53.8
-12.53	-11.75	-10.5	-6.68	-3.53	-3.05	0	5.55	6.03	10.5	11.75	16.24

CH 220.28 – LIMIT OF WORKS

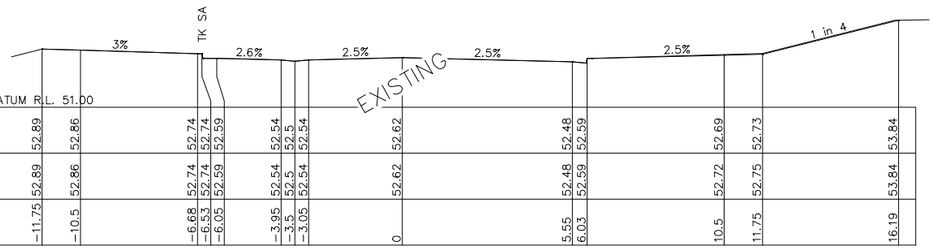

52.89	52.86	52.74	52.74	52.54	52.5	52.62	52.48	52.59	52.69	52.73	53.84
52.89	52.86	52.74	52.74	52.54	52.5	52.62	52.48	52.59	52.72	52.75	53.84
-11.75	-10.5	-6.68	-6.53	-3.95	-3.5	0	5.55	6.03	10.5	11.75	16.19

CH 218.68

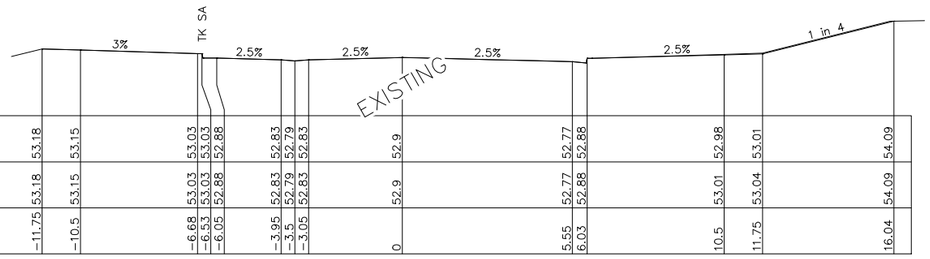

DESIGN SURFACE LEVEL	53.18	53.15	53.03	53.03	52.83	52.79	52.9	52.77	52.88	52.98	53.01	54.09
EXISTING SURFACE LEVEL	53.18	53.15	53.03	53.03	52.88	52.83	52.79	52.9	52.77	52.88	53.01	53.04	54.09
OFFSET	-11.75	-10.5	-6.68	-6.53	-6.05	-3.95	-3.5	-3.05	0	5.55	6.03	10.5	11.75	16.04

CH 210

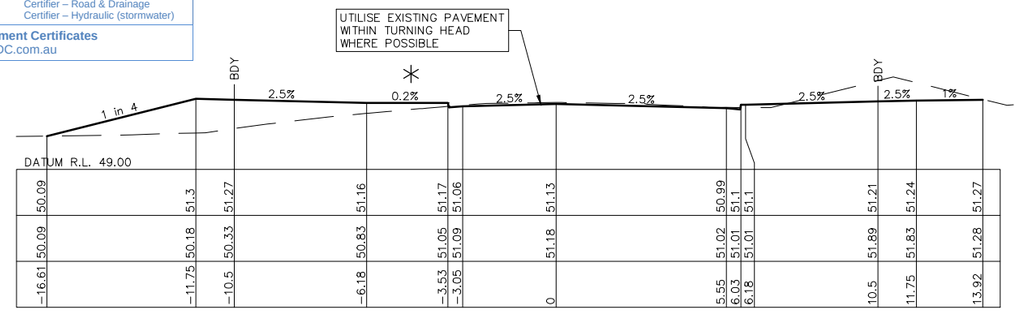

50.09	51.3	51.27	51.16	51.17	51.06	51.13	50.99	51.1	51.21	51.24	51.27
50.09	50.18	50.33	50.83	51.05	51.09	51.18	51.02	51.01	51.89	51.83	51.28
-16.61	-11.75	-10.5	-6.18	-3.53	-3.05	0	5.55	6.03	10.5	11.75	13.92

CH 252.12

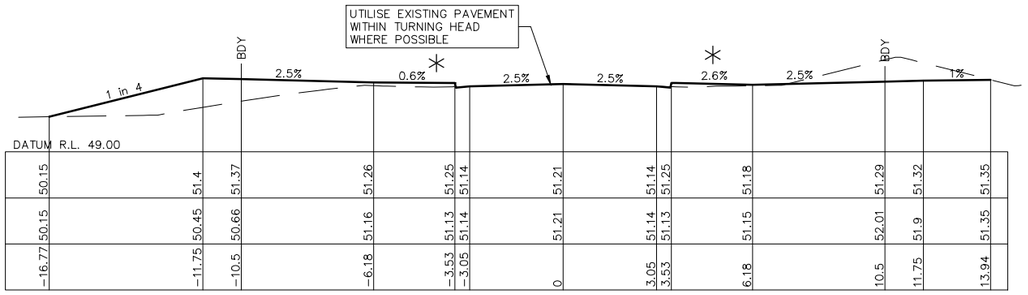

50.15	51.4	51.37	51.26	51.25	51.14	51.21	51.14	51.25	51.18	51.29	51.32	51.35
50.15	50.45	50.66	51.16	51.13	51.14	51.21	51.14	51.13	51.15	52.01	51.9	51.35
-16.77	-11.75	-10.5	-6.18	-3.53	-3.05	0	3.05	3.53	6.18	10.5	11.75	13.94

CH 250.52

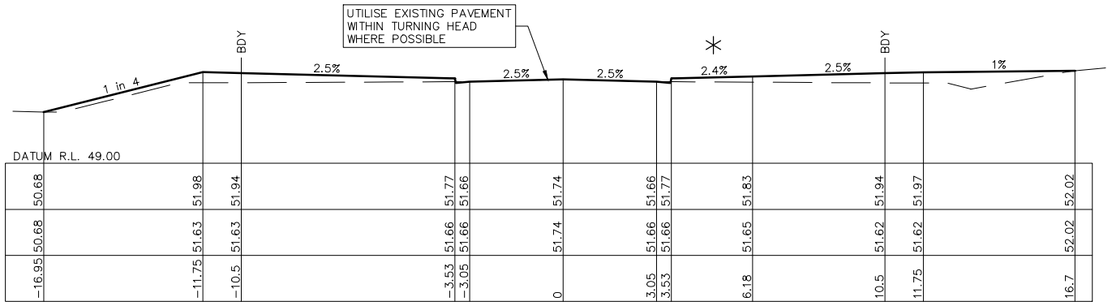

50.68	51.98	51.94	51.77	51.66	51.74	51.66	51.77	51.83	51.94	51.97	52.02
50.68	51.63	51.63	51.66	51.66	51.74	51.66	51.66	51.65	51.62	51.62	52.02
-16.95	-11.75	-10.5	-3.53	-3.05	0	3.05	3.53	6.18	10.5	11.75	16.7

CH 240

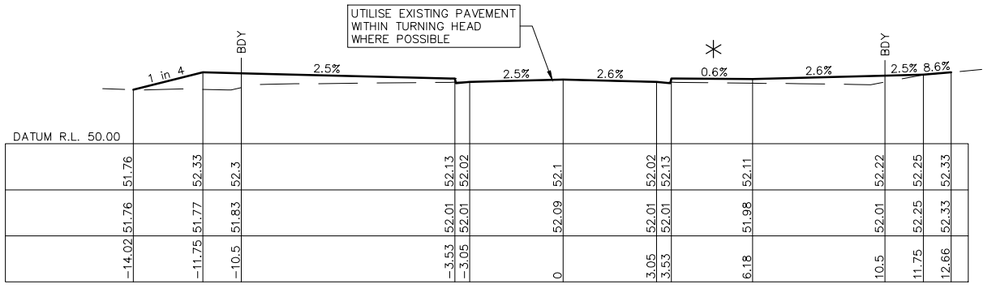

51.76	52.33	52.3	52.13	52.02	52.1	52.02	52.13	52.11	52.22	52.25	52.33
51.76	51.77	51.83	52.01	52.01	52.09	52.01	52.01	51.98	52.01	52.25	52.33	52.66
-14.02	-11.75	-10.5	-3.53	-3.05	0	3.05	3.53	6.18	10.5	11.75	12.66

CH 232.39

DIAL 1100 BEFORE YOU DIG

CONSTRUCTION ISSUE

REV.	DATE	AMENDMENT	DESIGN	DRAWN	CHECKED	APPROVED
1	21.01.22	ISSUED FOR CONSTRUCTION	B.M.	J.J.	B.M.	B.M.

SCALES: A1 1:100 — 0 2.5 5.0m — A3 1:200

DESIGN FILE S:\300001\DESIGN\12D\STAGE 2 CC\DESIGN FILE.project

ALL DIMENSIONS ARE IN METRES. DO NOT SCALE

adw Johnson
Central Coast
5 Pioneer Avenue,
P.O. Box 3717,
Tuggerah N.S.W. 2259
Phone: (02) 4305 4300
Fax: (02) 4305 4399
email: coast@adwjohnson.com.au
www.adwjohnson.com.au
ABN 62 129 445 398

CLIENT: FRASERS PROPERTY

PROPERTY DESCRIPTION: LOT 100 D.P.1262209 & LOT 1 D.P.859537
EPPING ROAD & LYONPARK ROAD,
MACQUARIE PARK
SSDA 8903

SURVEYED: ADW Johnson
DATUM: GDA94 M.G.A. ZONE 56 A.H.D.

PROJECT: PROPOSED SUBDIVISION

PLAN TITLE: ROAD CROSS SECTIONS
ROAD No.01
SHEET 1

PROJECT No. 300001(2) – DISCIPLINE ENG – NUMBER 231 REV. 1

Plotted By: Ben Myles Plot Date: 21/01/22 2:28:42PM Cad File: S:\300001\DRAWINGS\ENGINEERING\CIVIL\STAGE 2 CC ENG\300001(2)-ENG-231.DWG

100mm AT FULL SIZE

This plan includes coloured information. If you have a black and white copy you do not have all of the information. This note is coloured RED.

300001(2)-ENG-232

✳ MODIFY CROSS FALL OF PLANTED ZONES TO MAINTAIN 2.5% FOOTPATH

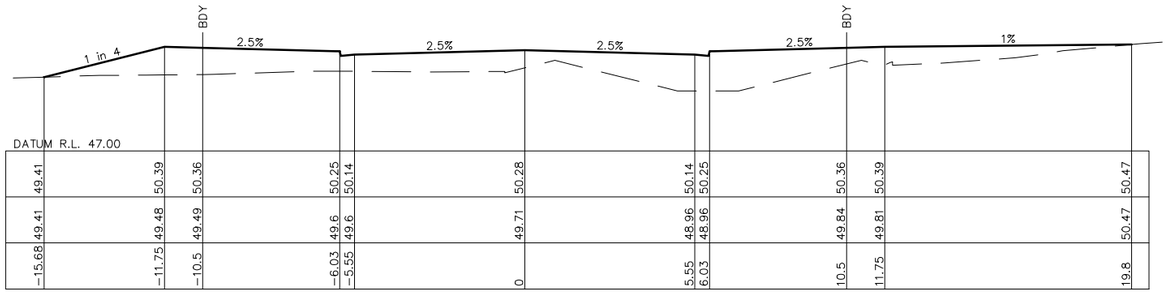

CH 268.26

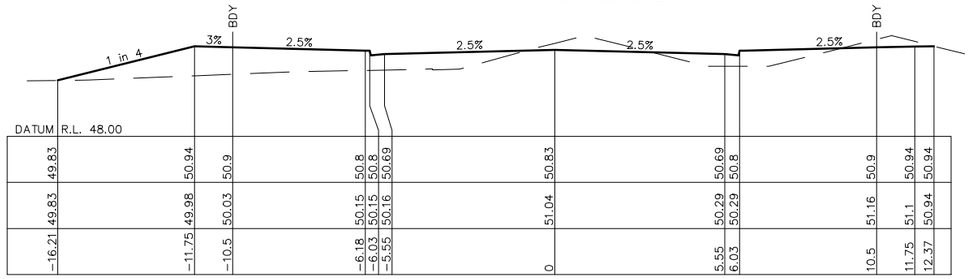

CH 258.27

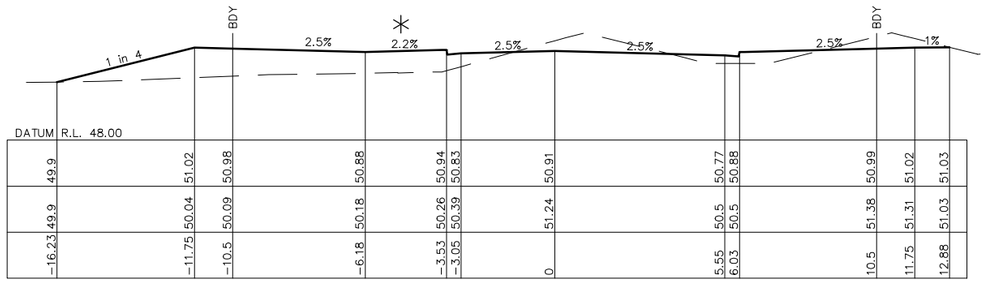

CH 256.67

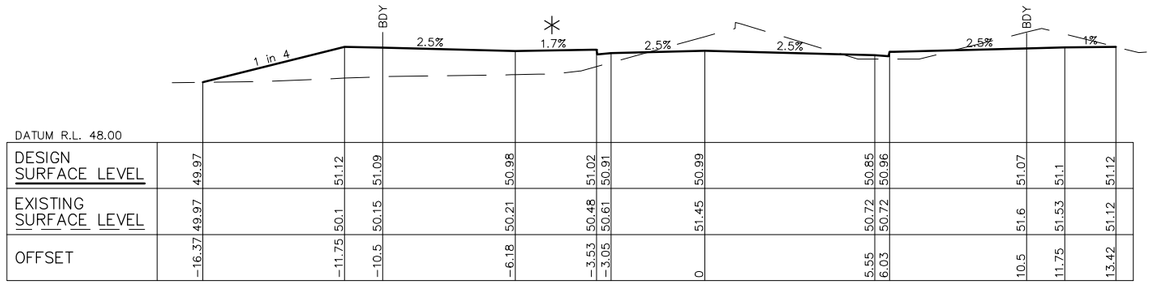

CH 255

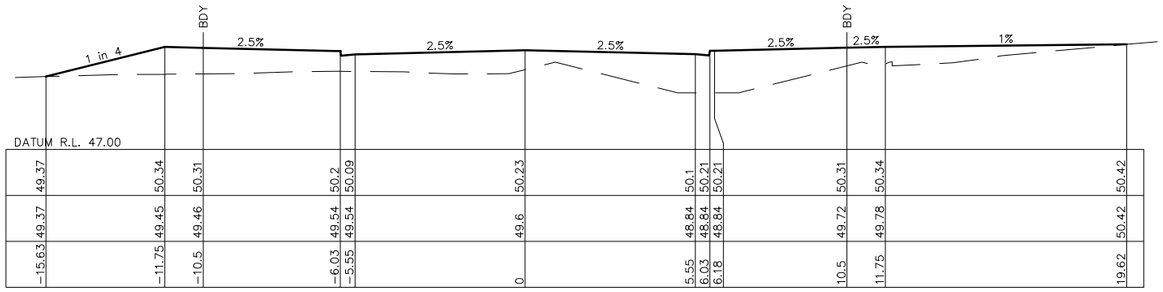

CH 269.12

These plans are referred to in certificate no. **16746** approved by:

Eric Hausfeld
Registered Certifier

Registration No: BDC 2416

Categories: Certifier – Subdivision
Certifier – Strata
Certifier – Stormwater
Certifier – Road & Drainage
Certifier – Hydraulic (stormwater)

Land Development Certificates
www.LDC.com.au

DIAL 1100 BEFORE YOU DIG

CONSTRUCTION ISSUE

REV.	DATE	AMENDMENT	DESIGN	DRAWN	CHECKED	APPROVED
1	21.01.22	ISSUED FOR CONSTRUCTION	B.M.	J.J.	B.M.	B.M.

SCALES: A1 1:100 — 0 2.5 5.0m — A3 1:200

DESIGN FILE S:\300001\DESIGN\12D\STAGE 2 CC\DESIGN FILE.project

ALL DIMENSIONS ARE IN METRES. DO NOT SCALE

adw Johnson
Central Coast
5 Pioneer Avenue,
P.O. Box 3717,
Tuggerah N.S.W. 2259
Phone: (02) 4305 4300
Fax: (02) 4305 4399
email: coast@adwjohnson.com.au
www.adwjohnson.com.au
ABN 62 129 445 398

CLIENT: FRASERS PROPERTY

PROPERTY DESCRIPTION: LOT 100 D.P.1262209 & LOT 1 D.P.859537
EPPING ROAD & LYONPARK ROAD,
MACQUARIE PARK
SSDA 8903

SURVEYED: ADW Johnson

DATUM: GDA94 M.G.A. ZONE 56 A.H.D.

PROJECT: PROPOSED SUBDIVISION

PLAN TITLE: ROAD CROSS SECTIONS
ROAD No.01
SHEET 2

PROJECT No.	DISCIPLINE	NUMBER	REV.
300001(2)	ENG	232	1

Plotted By: Ben Myles Plot Date: 21/01/22 2:28:46PM Cad File: S:\300001\DRAWINGS\ENGINEERING\CIVIL\STAGE 2 CC ENG\300001(2)-ENG-232.DWG

100mm AT FULL SIZE

This plan includes coloured information. If you have a black and white copy you do not have all of the information. This note is coloured RED.

300001(2)-ENG-233

✳ MODIFY CROSS FALL OF PLANTED ZONES TO MAINTAIN 2.5% FOOTPATH

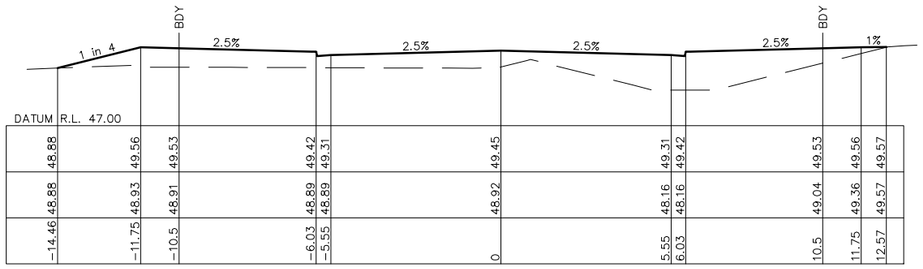

48.88	49.56	49.53	49.42	49.31	49.45	49.31	49.42	49.53	49.56	49.57	
48.88	48.93	48.91	48.89	48.89	48.92	48.16	48.16	49.04	49.36	49.57	
−14.46	−11.75	−10.5	−6.03	−5.55	0	5.55	6.03	10.5	11.75	12.57	

CH 281.54

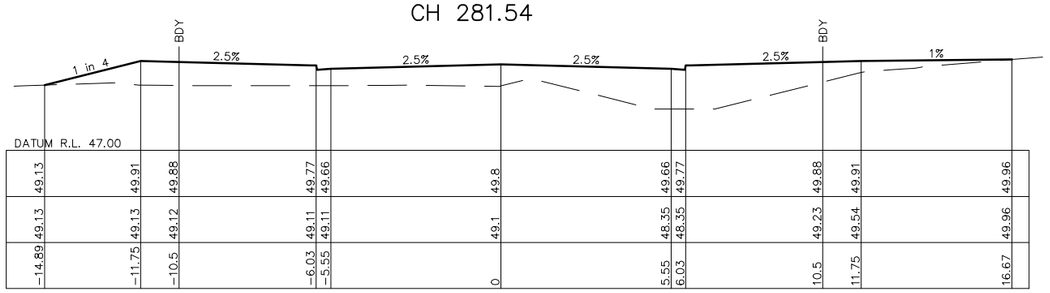

49.13	49.91	49.88	49.77	49.66	49.8	49.66	49.77	49.88	49.91	49.96	
49.13	49.13	49.12	49.11	49.11	49.1	48.35	48.35	49.23	49.54	49.96	
−14.89	−11.75	−10.5	−6.03	−5.55	0	5.55	6.03	10.5	11.75	16.67	

CH 276.12

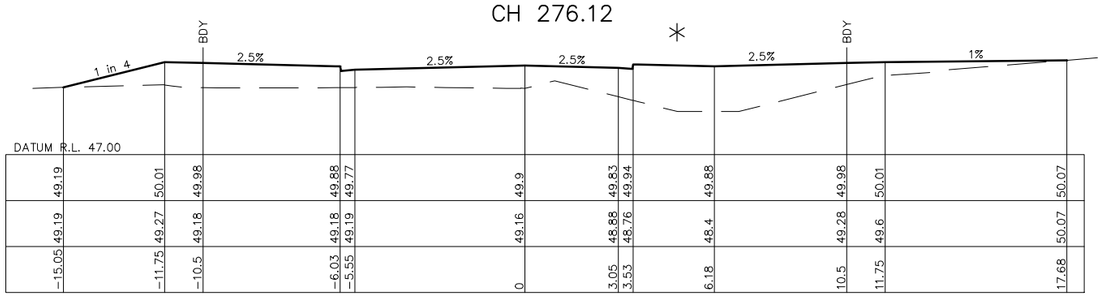

49.19	50.01	49.98	49.88	49.77	49.9	49.83	49.94	49.88	49.98	50.01	50.07
49.19	49.27	49.18	49.18	49.19	49.16	48.88	48.76	48.4	49.28	49.6	50.07
−15.05	−11.75	−10.5	−6.03	−5.55	0	3.05	3.53	6.18	10.5	11.75	17.68

CH 274.52

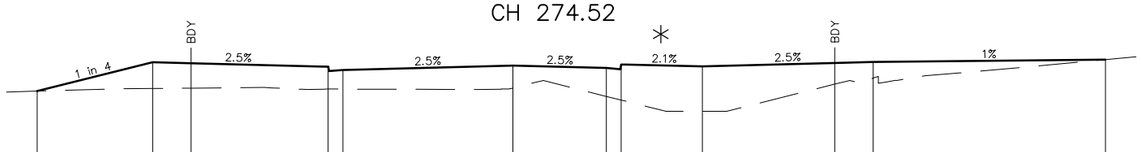

DATUM R.L. 47.00

DESIGN SURFACE LEVEL	49.31	50.25	50.22	50.11	50	50.14	50.06	50.17	50.12	50.23	50.26	50.33
EXISTING SURFACE LEVEL	49.31	49.39	49.4	49.37	49.37	49.41	49.13	49.01	48.65	49.53	49.74	50.33
OFFSET	−15.52	−11.75	−10.5	−6.03	−5.55	0	3.05	3.53	6.18	10.5	11.75	19.33

CH 270.72

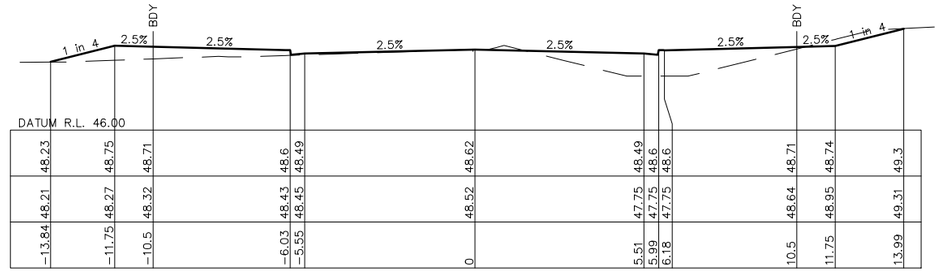

48.23	48.75	48.71	48.6	48.49	48.62	48.49	48.6	48.71	48.74	49.3	
48.21	48.27	48.32	48.43	48.45	48.52	47.75	47.75	48.64	48.95	49.31	
−13.84	−11.75	−10.5	−6.03	−5.55	0	5.51	5.99	6.18	10.5	11.75	13.99

CH 293.27

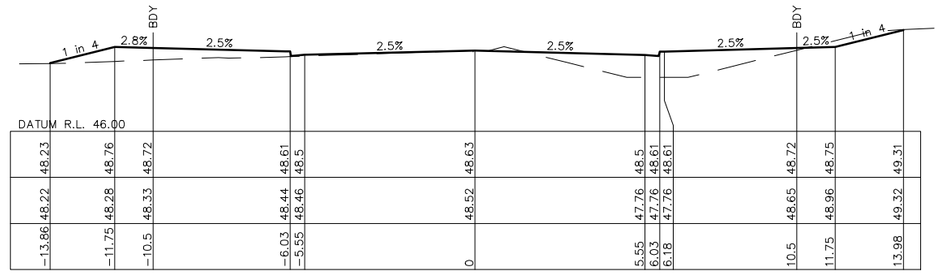

48.23	48.76	48.72	48.61	48.5	48.63	48.5	48.61	48.61	48.72	48.75	49.31
48.22	48.28	48.33	48.44	48.46	48.52	47.76	47.76	47.76	48.65	48.96	49.32
−13.86	−11.75	−10.5	−6.03	−5.55	0	5.55	6.03	6.18	10.5	11.75	13.98

CH 293.12

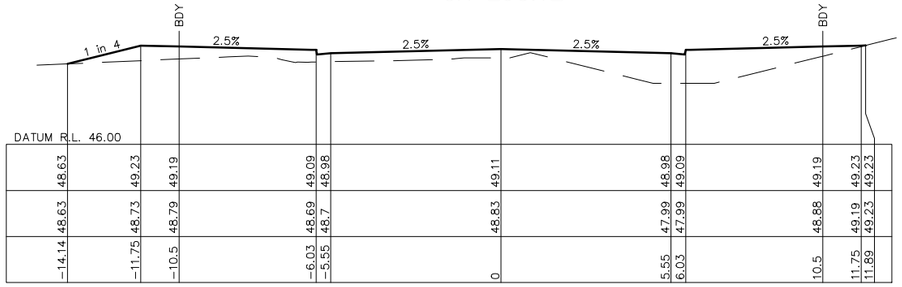

48.63	49.23	49.19	49.09	48.98	49.11	48.98	49.09	49.19	49.23	49.23	
48.63	48.73	48.79	48.69	48.7	48.83	47.99	47.99	48.88	49.19	49.23	
−14.14	−11.75	−10.5	−6.03	−5.55	0	5.55	6.03	10.5	11.75	11.89	

CH 286.35

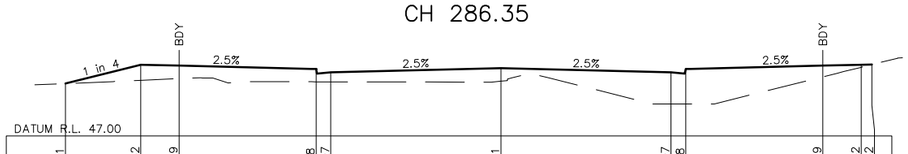

48.71	49.32	49.29	49.18	49.07	49.21	49.07	49.18	49.29	49.32	49.32	
48.71	48.81	48.87	48.76	48.76	48.78	48.04	48.04	48.92	49.24	49.32	
−14.21	−11.75	−10.5	−6.03	−5.55	0	5.55	6.03	10.5	11.75	12.1	

CH 285

These plans are referred to in certificate no. **16746** approved by:

Eric Hausfeld
Registered Certifier

Registration No: BDC 2416

Categories: Certifier – Subdivision
Certifier – Strata
Certifier – Stormwater
Certifier – Road & Drainage
Certifier – Hydraulic (stormwater)

Land Development Certificates
www.LDC.com.au

DIAL1100 BEFORE YOU DIG

CONSTRUCTION ISSUE

REV.	DATE	AMENDMENT	DESIGN	DRAWN	CHECKED	APPROVED
1	21.01.22	ISSUED FOR CONSTRUCTION	B.M.	J.J.	B.M.	B.M.

SCALES: A1 1:100 — 0, 2.5, 5.0m — A3 1:200

DESIGN FILE S:\300001\DESIGN\12D\STAGE 2 CC\DESIGN FILE.project

ALL DIMENSIONS ARE IN METRES. DO NOT SCALE

adw Johnson
Central Coast
5 Pioneer Avenue,
P.O. Box 3717,
Tuggerah N.S.W. 2259
Phone: (02) 4305 4300
Fax: (02) 4305 4399
email: coast@adwjohnson.com.au
www.adwjohnson.com.au
ABN 62 129 445 398

CLIENT: FRASERS PROPERTY

PROPERTY DESCRIPTION: LOT 100 D.P.1262209 & LOT 1 D.P.859537
EPPING ROAD & LYONPARK ROAD,
MACQUARIE PARK
SSDA 8903

SURVEYED: ADW Johnson
DATUM: GDA94 M.G.A. ZONE 56 A.H.D.

PROJECT: PROPOSED SUBDIVISION

PLAN TITLE: ROAD CROSS SECTIONS
ROAD No.01
SHEET 3

PROJECT No.	DISCIPLINE	NUMBER	REV.
300001(2)	ENG	233	1

Plotted By: Ben Myles Plot Date: 21/01/22 2:28:50PM Cad File: S:\300001\DRAWINGS\ENGINEERING\CIVIL\STAGE 2 CC ENG\300001(2)-ENG-233.DWG

100mm AT FULL SIZE

This plan includes coloured information. If you have a black and white copy you do not have all of the information. This note is coloured RED.

300001(2)-ENG-234

REFER SHEET 501 FOR SITE REGRADE DETAILS

✳ MODIFY CROSS FALL OF PLANTED ZONES TO MAINTAIN 2.5% FOOTPATH

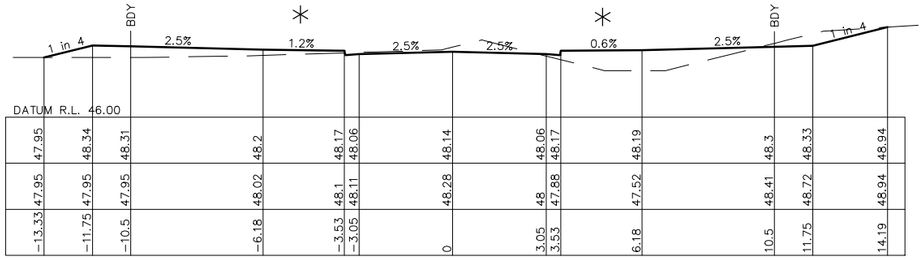

47.95	48.34	48.31	48.2	48.17	48.06	48.14	48.06	48.17	48.19	48.3	48.33	48.94
47.95	47.95	47.95	48.02	48.1	48.11	48.28	48	47.88	47.52	48.41	48.72	48.94
-13.33	-11.75	-10.5	-6.18	-3.53	-3.05	0	3.05	3.53	6.18	10.5	11.75	14.19

CH 300

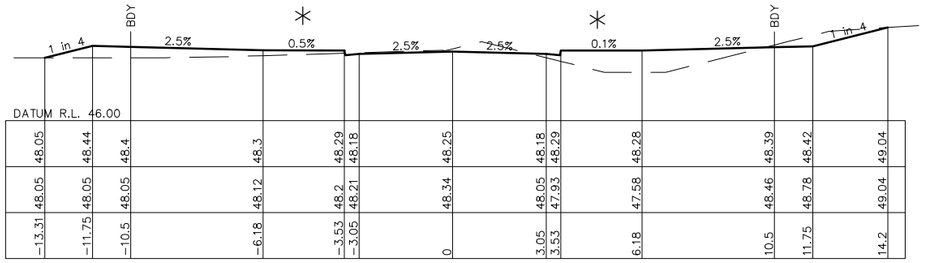

48.05	48.44	48.4	48.3	48.29	48.18	48.25	48.18	48.29	48.28	48.39	48.42	49.04
48.05	48.05	48.05	48.12	48.2	48.21	48.34	48.05	47.93	47.58	48.46	48.78	49.04
-13.31	-11.75	-10.5	-6.18	-3.53	-3.05	0	3.05	3.53	6.18	10.5	11.75	14.2

CH 298.44

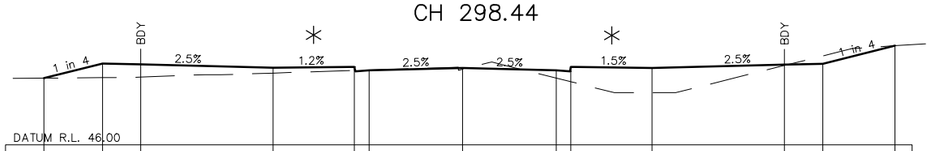

48.17	48.65	48.62	48.51	48.54	48.43	48.51	48.43	48.54	48.5	48.61	48.64	49.23
48.17	48.19	48.21	48.34	48.42	48.44	48.46	48.17	48.05	47.7	48.59	48.9	49.23
-13.66	-11.75	-10.5	-6.18	-3.53	-3.05	0	3.05	3.53	6.18	10.5	11.75	14.1

CH 294.87

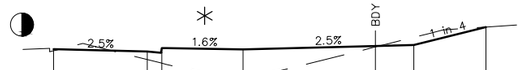

DATUM R.L. 46.00

DESIGN SURFACE LEVEL	48.52	48.44	48.55	48.51	48.62	48.65	49.24
EXISTING SURFACE LEVEL	48.47	48.18	48.06	47.7	48.59	48.9	49.24
OFFSET	0	3.05	3.53	6.18	10.5	11.75	14.1

CH 294.72

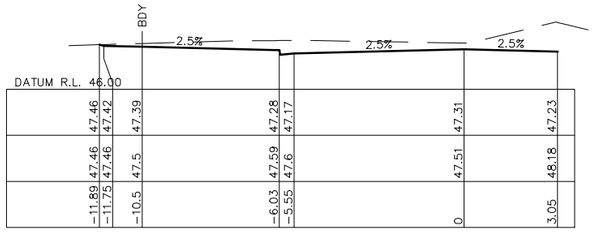

REFER SHEET 301 FOR INTERSECTION DETAILS

47.46	47.42	47.39	47.28	47.17	47.31	47.23
47.46	47.46	47.5	47.59	47.6	47.51	48.18
-11.89	-11.75	-10.5	-6.03	-5.55	0	3.05

CH 315

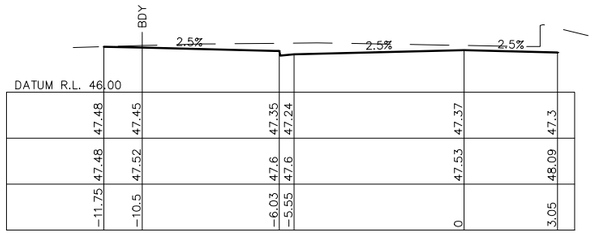

REFER SHEET 301 FOR INTERSECTION DETAILS

47.48	47.45	47.35	47.24	47.37	47.3
47.48	47.52	47.6	47.6	47.53	48.09
-11.75	-10.5	-6.03	-5.55	0	3.05

CH 313.42

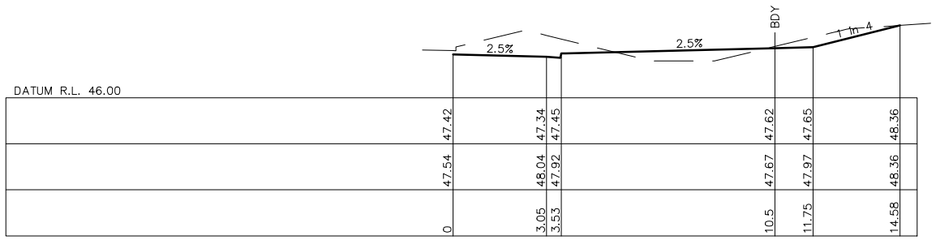

47.42	47.34	47.45	47.62	47.65	48.36
47.54	48.04	47.92	47.67	47.97	48.36
0	3.05	3.53	10.5	11.75	14.58

CH 312.44

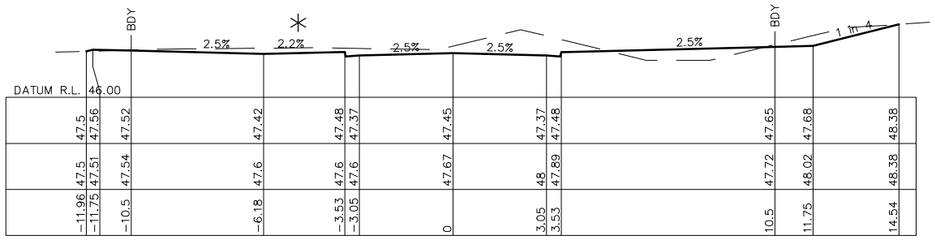

47.5	47.56	47.52	47.42	47.48	47.37	47.45	47.37	47.48	47.65	47.68	48.38
47.5	47.51	47.54	47.6	47.6	47.6	47.67	48	47.89	47.72	48.02	48.38
-11.96	-11.75	-10.5	-6.18	-3.53	-3.05	0	3.05	3.53	10.5	11.75	14.54

CH 311.82

These plans are referred to in certificate no. **16746** approved by:
Eric Hausfeld
Registered Certifier
Registration No: BDC 2416
Categories: Certifier – Subdivision
Certifier – Strata
Certifier – Stormwater
Certifier – Road & Drainage
Certifier – Hydraulic (stormwater)
Land Development Certificates
www.LDC.com.au

DIAL 1100 BEFORE YOU DIG

CONSTRUCTION ISSUE

REV.	DATE	AMENDMENT	DESIGN	DRAWN	CHECKED	APPROVED
1	21.01.22	ISSUED FOR CONSTRUCTION	B.M.	J.J.	B.M.	B.M.

SCALES: A1 1:100 — 0 2.5 5.0m — A3 1:200

DESIGN FILE S:\300001\DESIGN\12D\STAGE 2 CC\DESIGN FILE.project

ALL DIMENSIONS ARE IN METRES. DO NOT SCALE

adw Johnson
Central Coast
5 Pioneer Avenue,
P.O. Box 3717,
Tuggerah N.S.W. 2259
Phone: (02) 4305 4300
Fax: (02) 4305 4399
email: coast@adwjohnson.com.au
www.adwjohnson.com.au
ABN 62 129 445 398

CLIENT: FRASERS PROPERTY

PROPERTY DESCRIPTION: LOT 100 D.P.1262209 & LOT 1 D.P.859537
EPPING ROAD & LYONPARK ROAD,
MACQUARIE PARK
SSDA 8903

SURVEYED: ADW Johnson
DATUM: GDA94 M.G.A. ZONE 56 A.H.D.

PROJECT: PROPOSED SUBDIVISION

PLAN TITLE: ROAD CROSS SECTIONS
ROAD No.01
SHEET 4

PROJECT No.	DISCIPLINE	NUMBER	REV.
300001(2) -	ENG -	234	1

Plotted By: Ben Myles Plot Date: 21/01/22 2:28:54PM Cad File: S:\300001\DRAWINGS\ENGINEERING\CIVIL\STAGE 2 CC ENG\300001(2)-ENG-234.DWG

100mm AT FULL SIZE

This plan includes coloured information. If you have a black and white copy you do not have all of the information. This note is coloured RED.

300001(2)-ENG-235

REFER SHEET 501 FOR SITE REGRADE DETAILS

✳ MODIFY CROSS FALL OF PLANTED ZONES TO MAINTAIN 2.5% FOOTPATH

REFER SHEET 301 FOR INTERSECTION DETAILS

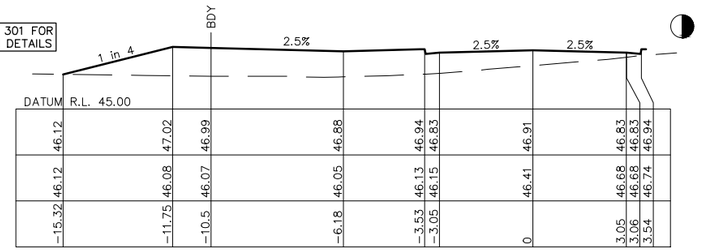

CH 336.86

REFER SHEET 301 FOR INTERSECTION DETAILS

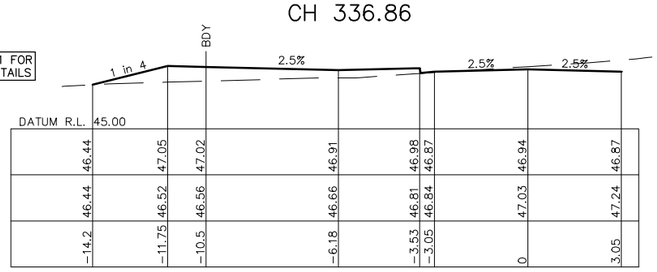

CH 332.02

REFER SHEET 301 FOR INTERSECTION DETAILS

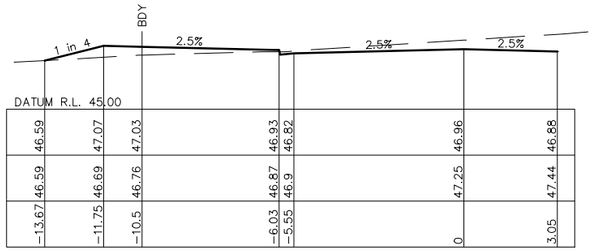

CH 330.42

REFER SHEET 301 FOR INTERSECTION DETAILS

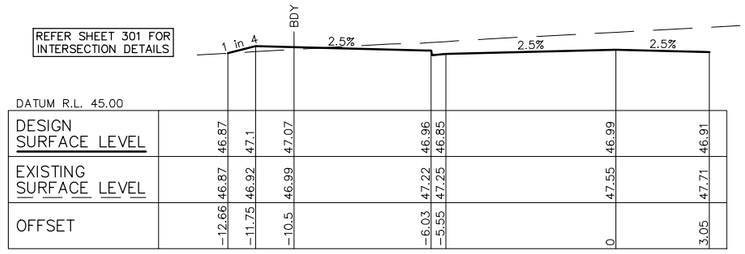

CH 327.23

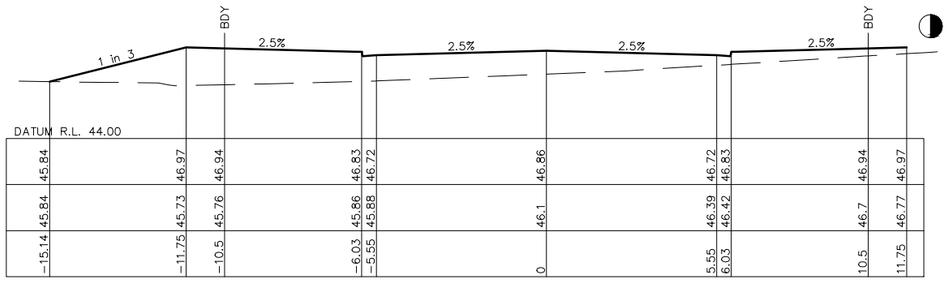

CH 343.03

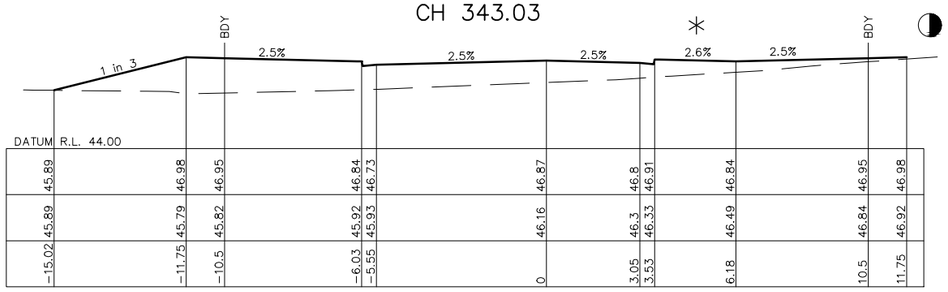

CH 341.43

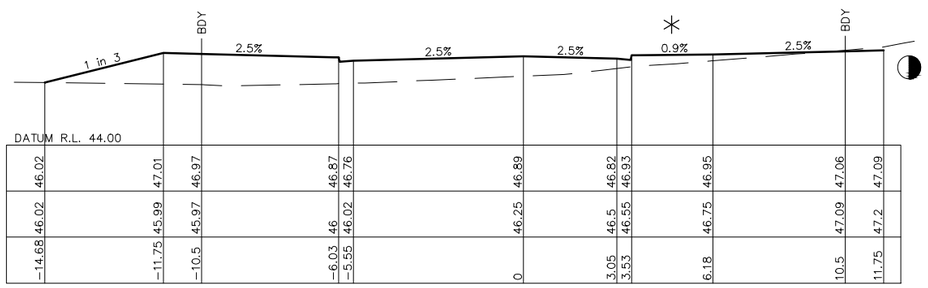

CH 338.5

REFER SHEET 301 FOR INTERSECTION DETAILS

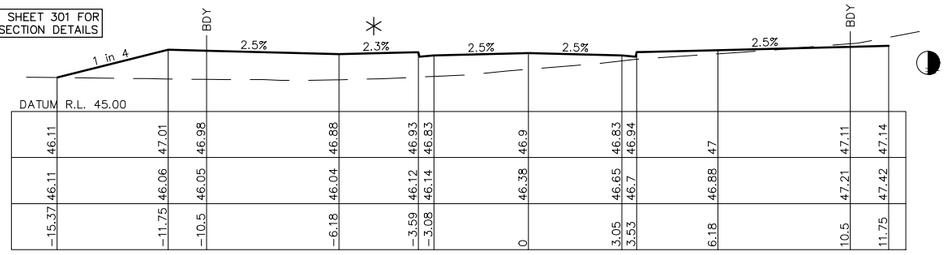

CH 337.15

These plans are referred to in certificate no. **16746** approved by:

Eric Hausfeld
Registered Certifier

Registration No: BDC 2416
Categories: Certifier – Subdivision
Certifier – Strata
Certifier – Stormwater
Certifier – Road & Drainage
Certifier – Hydraulic (stormwater)

Land Development Certificates
www.LDC.com.au

DIAL 1100 BEFORE YOU DIG

CONSTRUCTION ISSUE

REV.	DATE	AMENDMENT	DESIGN	DRAWN	CHECKED	APPROVED
1	21.01.22	ISSUED FOR CONSTRUCTION	B.M.	J.J.	B.M.	B.M.

SCALES: A1 1:100 — 0 2.5 5.0m — A3 1:200

DESIGN FILE S:\300001\DESIGN\12D\STAGE 2 CC\DESIGN FILE.project

ALL DIMENSIONS ARE IN METRES. DO NOT SCALE

adw Johnson
Central Coast
5 Pioneer Avenue,
P.O. Box 3717,
Tuggerah N.S.W. 2259
Phone: (02) 4305 4300
Fax: (02) 4305 4399
email: coast@adwjohnson.com.au
www.adwjohnson.com.au
ABN 62 129 445 398

CLIENT: FRASERS PROPERTY

PROPERTY DESCRIPTION
LOT 100 D.P.1262209 & LOT 1 D.P.859537
EPPING ROAD & LYONPARK ROAD,
MACQUARIE PARK
SSDA 8903

SURVEYED: ADW Johnson
DATUM: GDA94 M.G.A. ZONE 56 A.H.D.

PROJECT: PROPOSED SUBDIVISION

PLAN TITLE: ROAD CROSS SECTIONS
ROAD No.01
SHEET 5

PROJECT No.	DISCIPLINE	NUMBER	REV.
300001(2) –	ENG –	235	1

Plotted By: Ben Myles Plot Date: 21/01/22 2:28:58PM Cad File: S:\300001\DRAWINGS\ENGINEERING\CIVIL\STAGE 2 CC ENG\300001(2)-ENG-235.DWG

100mm AT FULL SIZE

This plan includes coloured information. If you have a black and white copy you do not have all of the information. This note is coloured RED.

300001(2)-ENG-236

REFER SHEET 501 FOR SITE REGRADE DETAILS

✳ MODIFY CROSS FALL OF PLANTED ZONES TO MAINTAIN 2.5% FOOTPATH

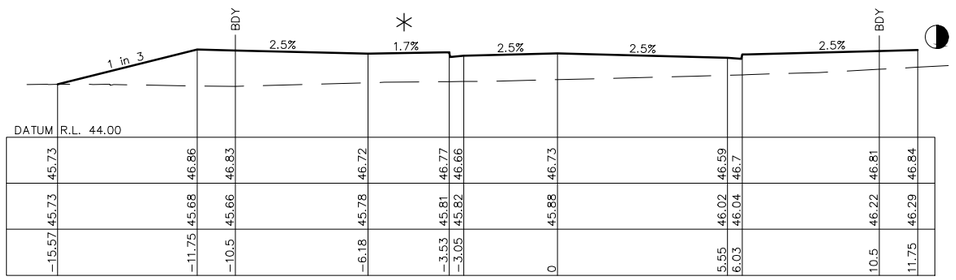

CH 360

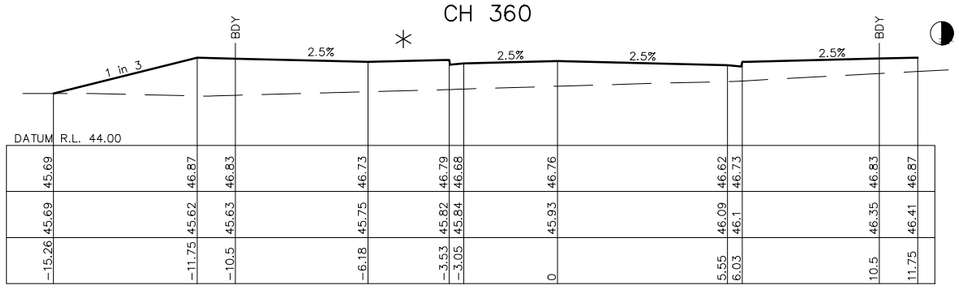

CH 357.06

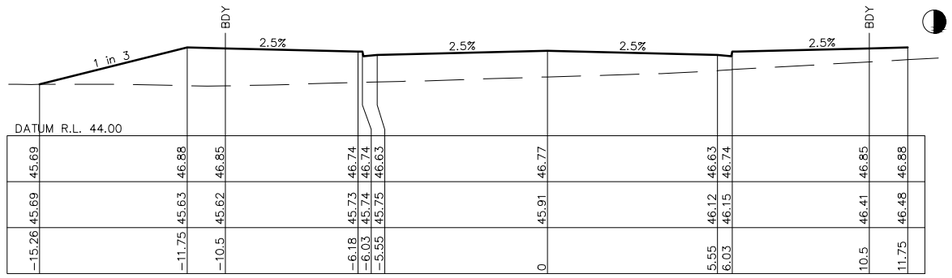

CH 355.46

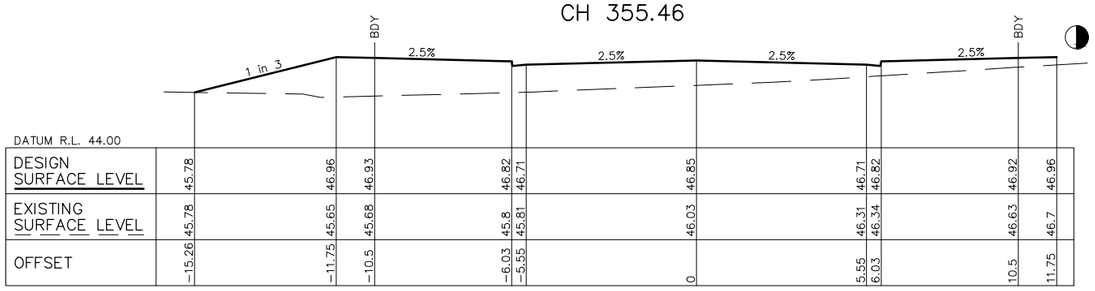

CH 345

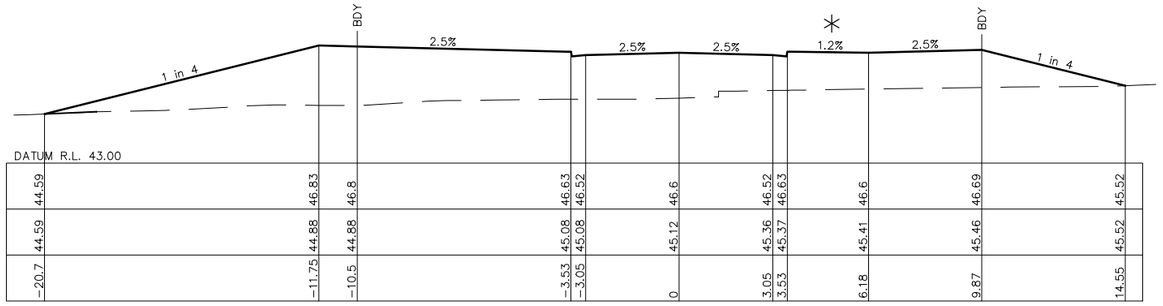

CH 379.7

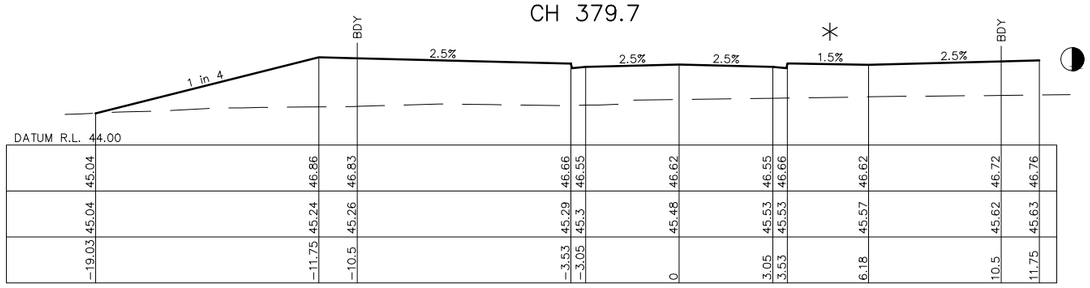

CH 375

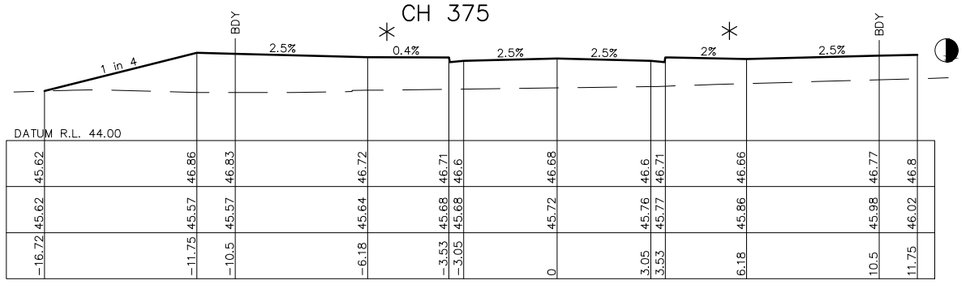

CH 367.63

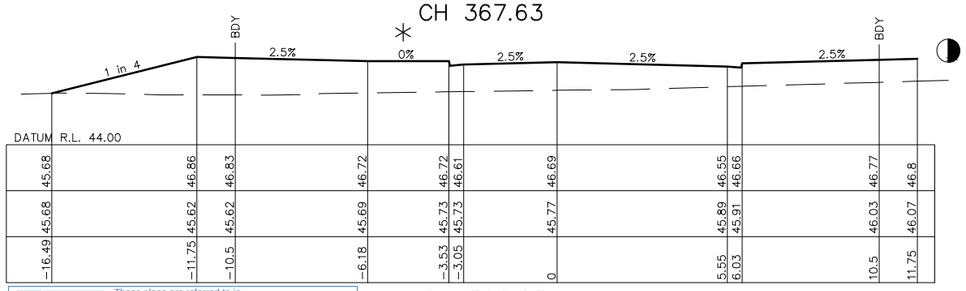

CH 366.03

These plans are referred to in certificate no. **16746** approved by:

Eric Hausfeld
Registered Certifier

Registration No: BDC 2416

Categories: Certifier – Subdivision
Certifier – Strata
Certifier – Stormwater
Certifier – Road & Drainage
Certifier – Hydraulic (stormwater)

Land Development Certificates
www.LDC.com.au

DIAL 1100 BEFORE YOU DIG

CONSTRUCTION ISSUE

REV.	DATE	AMENDMENT	DESIGN	DRAWN	CHECKED	APPROVED
1	21.01.22	ISSUED FOR CONSTRUCTION	B.M.	J.J.	B.M.	B.M.

SCALES: A1 1:100 — 0 2.5 5.0m — A3 1:200

DESIGN FILE S:\300001\DESIGN\12D\STAGE 2 CC\DESIGN FILE.project

ALL DIMENSIONS ARE IN METRES. DO NOT SCALE

adw Johnson
Central Coast
5 Pioneer Avenue,
P.O. Box 3717,
Tuggerah N.S.W. 2259
Phone: (02) 4305 4300
Fax: (02) 4305 4399
email: coast@adwjohnson.com.au
www.adwjohnson.com.au
ABN 62 129 445 398

CLIENT: FRASERS PROPERTY

PROPERTY DESCRIPTION: LOT 100 D.P.1262209 & LOT 1 D.P.859537
EPPING ROAD & LYONPARK ROAD,
MACQUARIE PARK
SSDA 8903

SURVEYED: ADW Johnson
DATUM: GDA94 M.G.A. ZONE 56 A.H.D.

PROJECT: PROPOSED SUBDIVISION

PLAN TITLE: ROAD CROSS SECTIONS
ROAD No.01
SHEET 6

PROJECT No.	DISCIPLINE	NUMBER	REV.
300001(2) -	ENG -	236	1

Plotted By: Ben Myles Plot Date: 21/01/22 2:29:02PM Cad File: S:\300001\DRAWINGS\ENGINEERING\CIVIL\STAGE 2 CC ENG\300001(2)-ENG-236.DWG

100mm AT FULL SIZE

This plan includes coloured information. If you have a black and white copy you do not have all of the information. This note is coloured RED.

300001(2)-ENG-237

REFER SHEET 501 FOR SITE REGRADE DETAILS

✳ MODIFY CROSS FALL OF PLANTED ZONES TO MAINTAIN 2.5% FOOTPATH

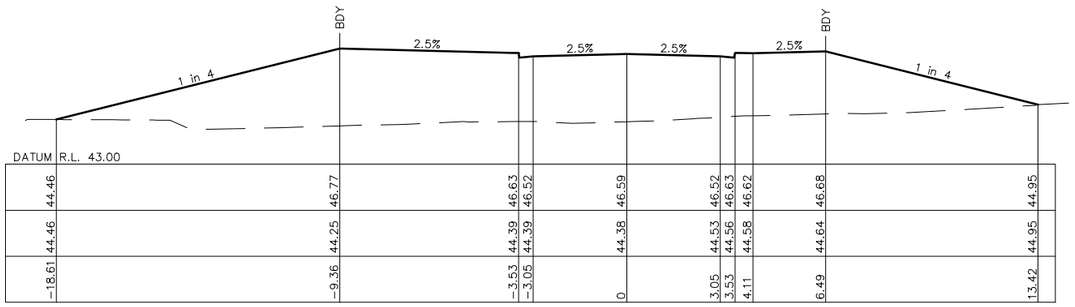

CH 392.44

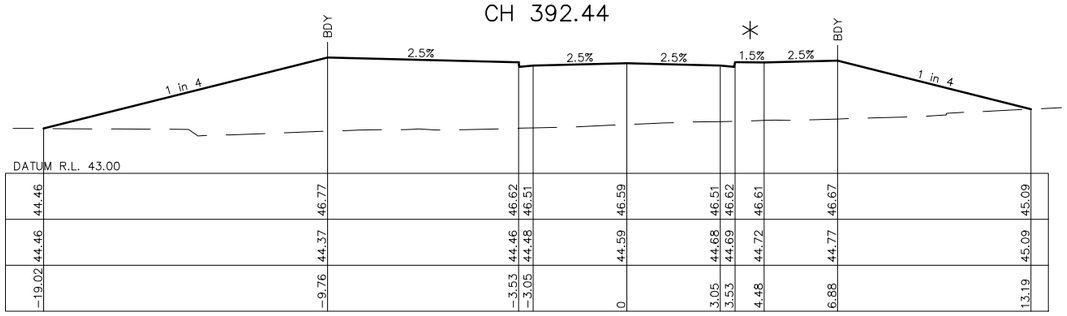

CH 390

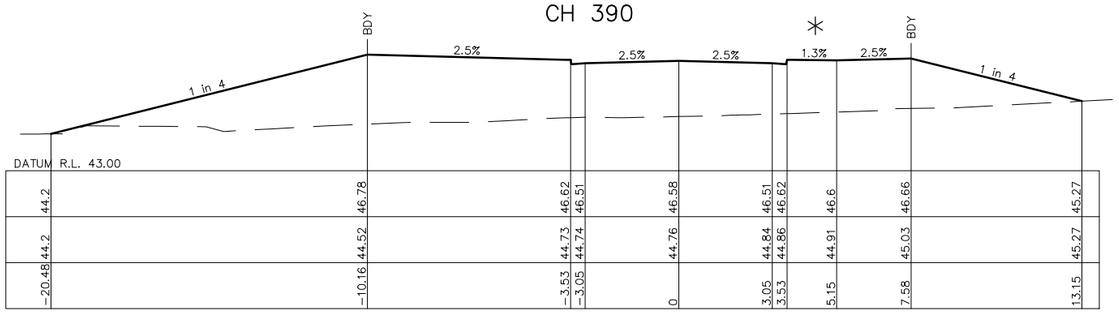

CH 386.76

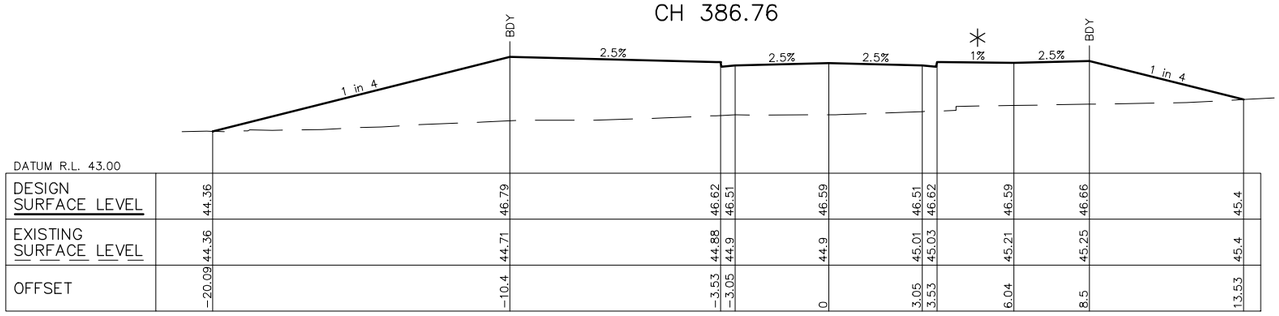

CH 383.5

REFER SHEET 701 FOR BRIDGE DETAILS

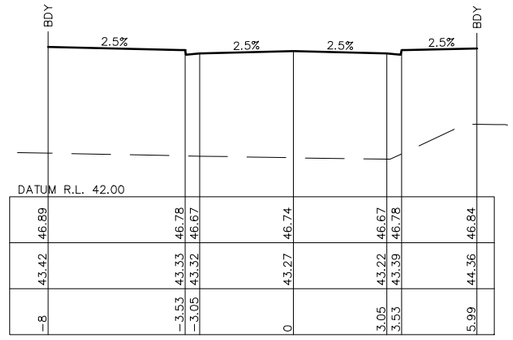

CH 412.45

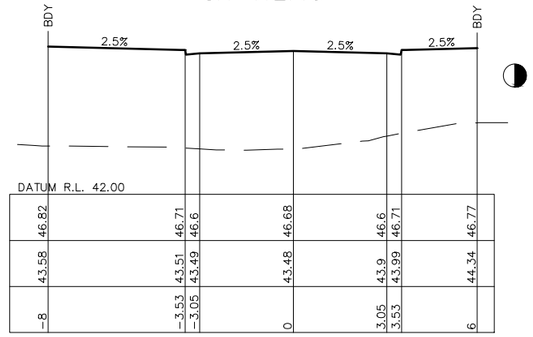

CH 405

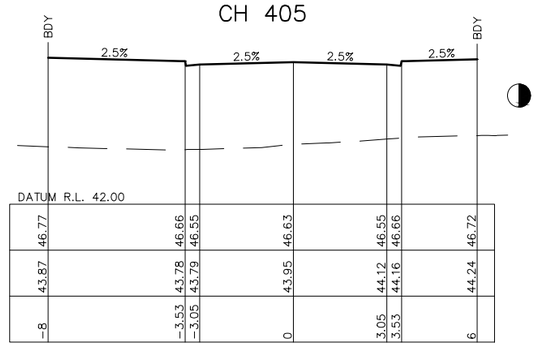

CH 399.8

These plans are referred to in certificate no. **16746** approved by:

Eric Hausfeld
Registered Certifier

Registration No: BDC 2416
Categories: Certifier – Subdivision
Certifier – Strata
Certifier – Stormwater
Certifier – Road & Drainage
Certifier – Hydraulic (stormwater)

Land Development Certificates
www.LDC.com.au

DIAL 1100 BEFORE YOU DIG

CONSTRUCTION ISSUE

REV.	DATE	AMENDMENT	DESIGN	DRAWN	CHECKED	APPROVED
1	21.01.22	ISSUED FOR CONSTRUCTION	B.M.	J.J.	B.M.	B.M.

SCALES: A1 1:100 — 0 2.5 5.0m — A3 1:200

DESIGN FILE S:\300001\DESIGN\12D\STAGE 2 CC\DESIGN FILE.project

ALL DIMENSIONS ARE IN METRES. DO NOT SCALE

adw Johnson
Central Coast
5 Pioneer Avenue,
P.O. Box 3717,
Tuggerah N.S.W. 2259
Phone: (02) 4305 4300
Fax: (02) 4305 4399
email: coast@adwjohnson.com.au
www.adwjohnson.com.au
ABN 62 129 445 398

CLIENT: FRASERS PROPERTY

PROPERTY DESCRIPTION: LOT 100 D.P.1262209 & LOT 1 D.P.859537
EPPING ROAD & LYONPARK ROAD,
MACQUARIE PARK
SSDA 8903

SURVEYED: ADW Johnson
DATUM: GDA94 M.G.A. ZONE 56 A.H.D.

PROJECT: PROPOSED SUBDIVISION

PLAN TITLE: ROAD CROSS SECTIONS
ROAD No.01
SHEET 7

PROJECT No.	DISCIPLINE	NUMBER	REV.
300001(2) -	ENG -	237	1

Plotted By: Ben Myles Plot Date: 21/01/22 2:29:06PM Cad File: S:\300001\DRAWINGS\ENGINEERING\CIVIL\STAGE 2 CC ENG\300001(2)-ENG-237.DWG

100mm AT FULL SIZE

This plan includes coloured information. If you have a black and white copy you do not have all of the information. This note is coloured RED.

300001(2)-ENG-238

REFER SHEET 501 FOR SITE REGRADE DETAILS

EXISTING RETAINING WALL. EXCAVATION TO BE UNDERTAKEN UNDER GEOTECHNICAL SUPERVISION. CONTRACTOR TO PREPARE DILAPIDATION REPORT PRIOR TO COMMENCING WORKS

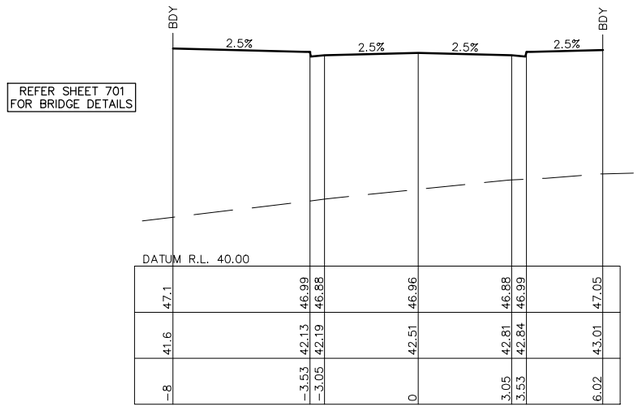

CH 435

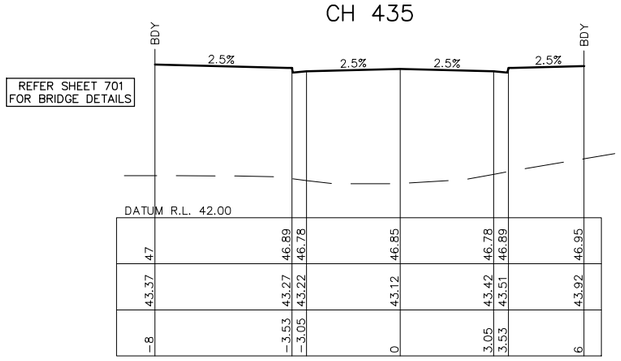

CH 424.06

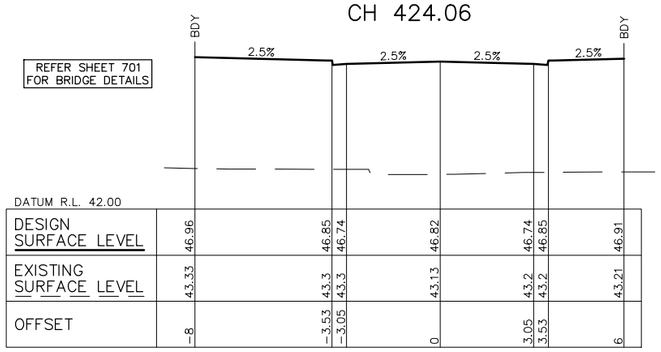

CH 420

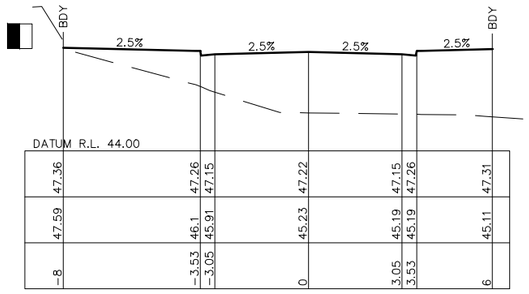

CH 463.4

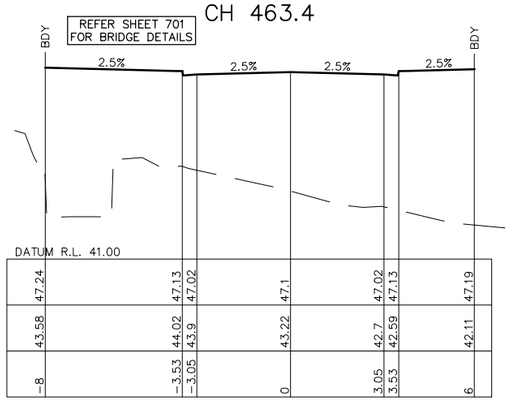

CH 450

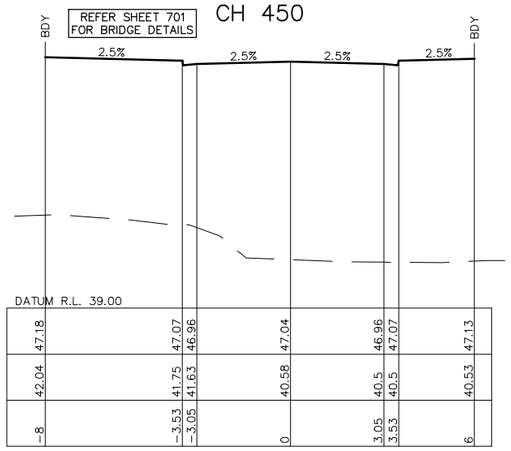

CH 443.71

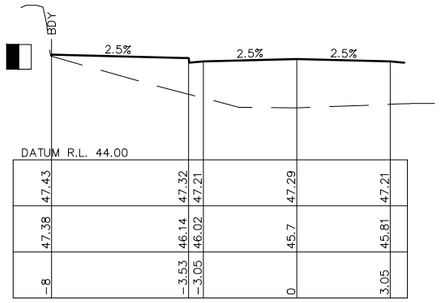

CH 470.4

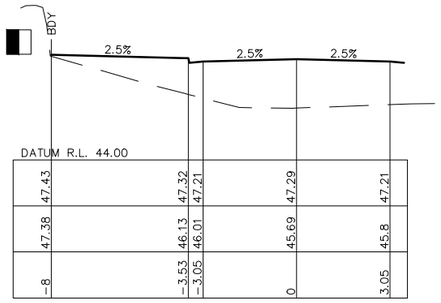

CH 470.25

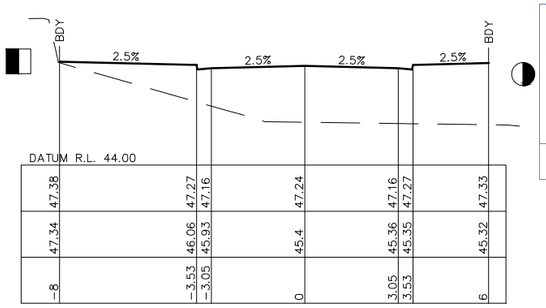

CH 465

These plans are referred to in certificate no. **16746** approved by:

Eric Hausfeld
Registered Certifier

Registration No: BDC 2416
Categories: Certifier – Subdivision
Certifier – Strata
Certifier – Stormwater
Certifier – Road & Drainage
Certifier – Hydraulic (stormwater)

Land Development Certificates
www.LDC.com.au

DIAL 1100 BEFORE YOU DIG

CONSTRUCTION ISSUE

REV.	DATE	AMENDMENT	DESIGN	DRAWN	CHECKED	APPROVED
1	21.01.22	ISSUED FOR CONSTRUCTION	B.M.	J.J.	B.M.	B.M.

SCALES: A1 1:100 — 0 2.5 5.0m — A3 1:200

DESIGN FILE S:\300001\DESIGN\12D\STAGE 2 CC\DESIGN FILE.project

ALL DIMENSIONS ARE IN METRES. DO NOT SCALE

adw Johnson
Central Coast
5 Pioneer Avenue,
P.O. Box 3717,
Tuggerah N.S.W. 2259
Phone: (02) 4305 4300
Fax: (02) 4305 4399
email: coast@adwjohnson.com.au
www.adwjohnson.com.au
ABN 62 129 445 398

CLIENT: FRASERS PROPERTY

PROPERTY DESCRIPTION: LOT 100 D.P.1262209 & LOT 1 D.P.859537
EPPING ROAD & LYONPARK ROAD,
MACQUARIE PARK
SSDA 8903

SURVEYED: ADW Johnson
DATUM: GDA94 M.G.A. ZONE 56 A.H.D.

PROJECT: PROPOSED SUBDIVISION

PLAN TITLE: ROAD CROSS SECTIONS
ROAD No.01
SHEET 8

PROJECT No.	DISCIPLINE	NUMBER	REV.
300001(2) -	ENG -	238	1

Plotted By: Ben Myles Plot Date: 21/01/22 2:29:10PM Cad File: S:\300001\DRAWINGS\ENGINEERING\CIVIL\STAGE 2 CC ENG\300001(2)-ENG-238.DWG

100mm AT FULL SIZE

This plan includes coloured information. If you have a black and white copy you do not have all of the information. This note is coloured RED.

300001(2)-ENG-239

REFER SHEET 501 FOR SITE REGRADE DETAILS

EXISTING RETAINING WALL. EXCAVATION TO BE UNDERTAKEN UNDER GEOTECHNICAL SUPERVISION. CONTRACTOR TO PREPARE DILAPIDATION REPORT PRIOR TO COMMENCING WORKS

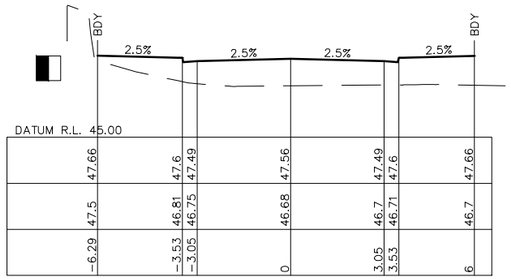

CH 500

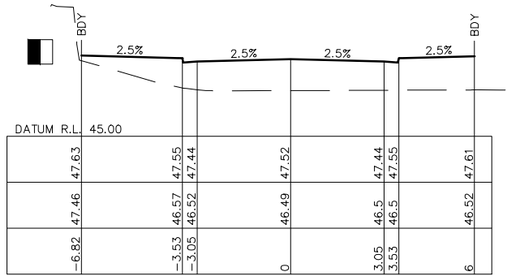

CH 495

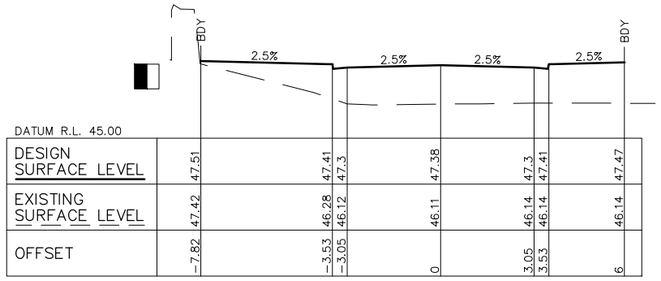

CH 480

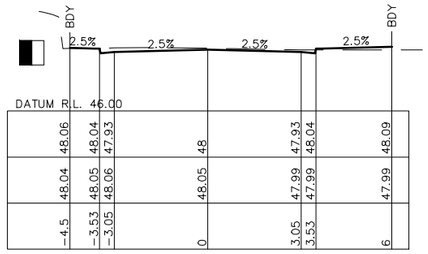

CH 540

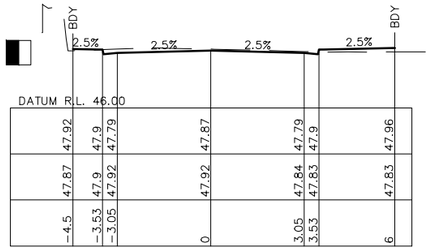

CH 529.6

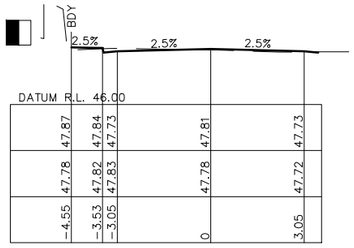

CH 524.72

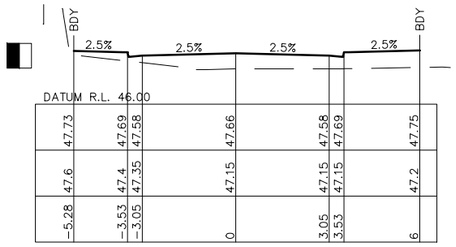

CH 510

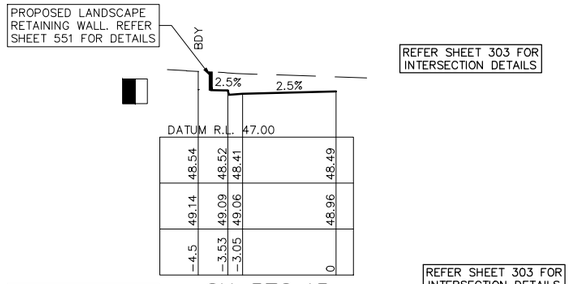

CH 572.45

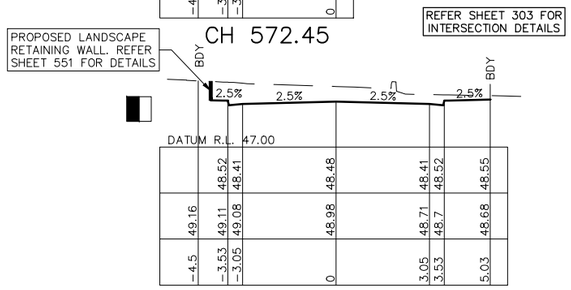

CH 572.08

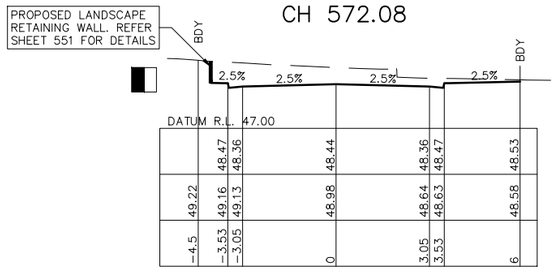

CH 570

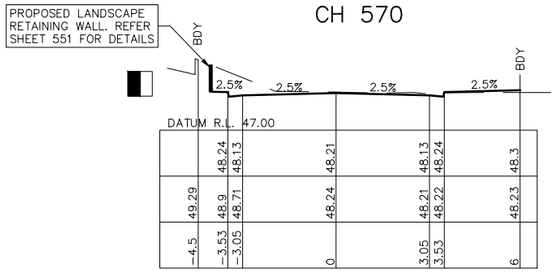

CH 555

These plans are referred to in certificate no. **16746** approved by:

Eric Hausfeld
Registered Certifier

Registration No: BDC 2416

Categories: Certifier – Subdivision
Certifier – Strata
Certifier – Stormwater
Certifier – Road & Drainage
Certifier – Hydraulic (stormwater)

Land Development Certificates
www.LDC.com.au

DIAL 1100 BEFORE YOU DIG

CONSTRUCTION ISSUE

REV.	DATE	AMENDMENT	DESIGN	DRAWN	CHECKED	APPROVED
1	21.01.22	ISSUED FOR CONSTRUCTION	B.M.	J.J.	B.M.	B.M.

SCALES: A1 1:100 — 0 2.5 5.0m — A3 1:200

DESIGN FILE S:\300001\DESIGN\12D\STAGE 2 CC\DESIGN FILE.project

ALL DIMENSIONS ARE IN METRES. DO NOT SCALE

adw Johnson
Central Coast
5 Pioneer Avenue,
P.O. Box 3717,
Tuggerah N.S.W. 2259
Phone: (02) 4305 4300
Fax: (02) 4305 4399
email: coast@adwjohnson.com.au
www.adwjohnson.com.au
ABN 62 129 445 398

CLIENT: FRASERS PROPERTY

PROPERTY DESCRIPTION: LOT 100 D.P.1262209 & LOT 1 D.P.859537
EPPING ROAD & LYONPARK ROAD,
MACQUARIE PARK
SSDA 8903

SURVEYED: ADW Johnson

DATUM: GDA94 M.G.A. ZONE 56 A.H.D.

PROJECT: PROPOSED SUBDIVISION

PLAN TITLE: ROAD CROSS SECTIONS
ROAD No.01
SHEET 9

PROJECT No.	DISCIPLINE	NUMBER	REV.
300001(2)	ENG	239	1

Plotted By: Ben Myles Plot Date: 21/01/22 2:29:14PM Cad File: S:\300001\DRAWINGS\ENGINEERING\CIVIL\STAGE 2 CC ENG\300001(2)-ENG-239.DWG

100mm AT FULL SIZE

This plan includes coloured information. If you have a black and white copy you do not have all of the information. This note is coloured RED.

300001(2)-ENG-240

100mm AT FULL SIZE

This plan includes coloured information. If you have a black and white copy you do not have all of the information. This note is coloured RED.

BERM TO BE PROVIDED AT BASE OF ALL BATTERS. REFER SHEET 202 FOR DETAILS.

✳ MODIFY CROSS FALL OF PLANTED ZONES TO MAINTAIN 2.5% FOOTPATH

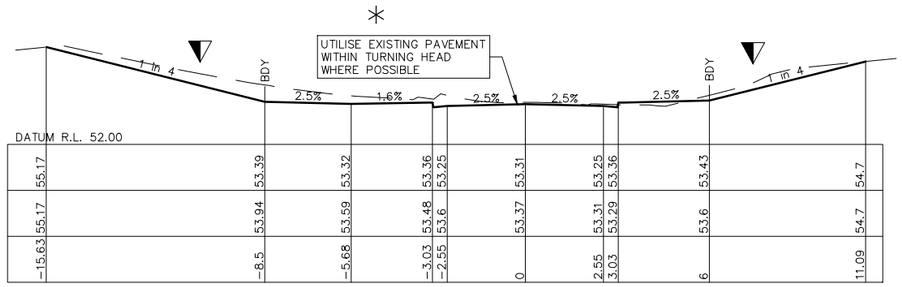

CH 210

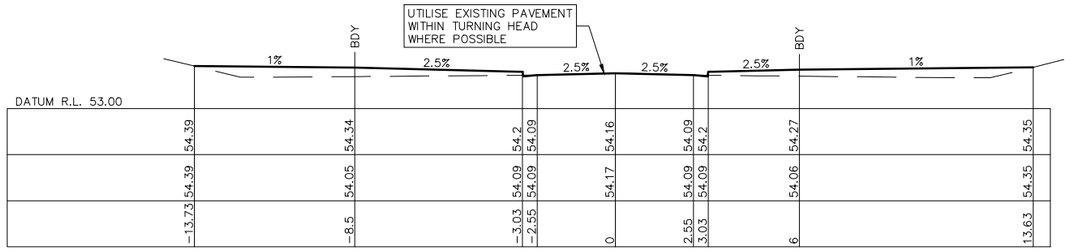

CH 195

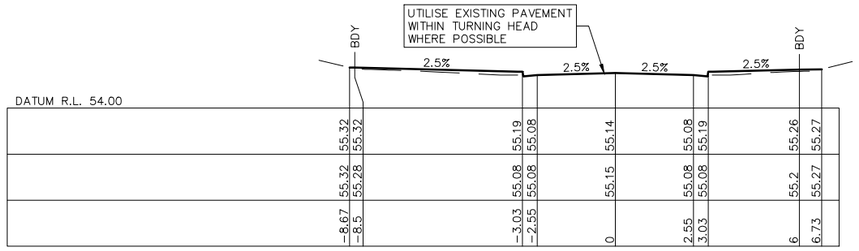

CH 180

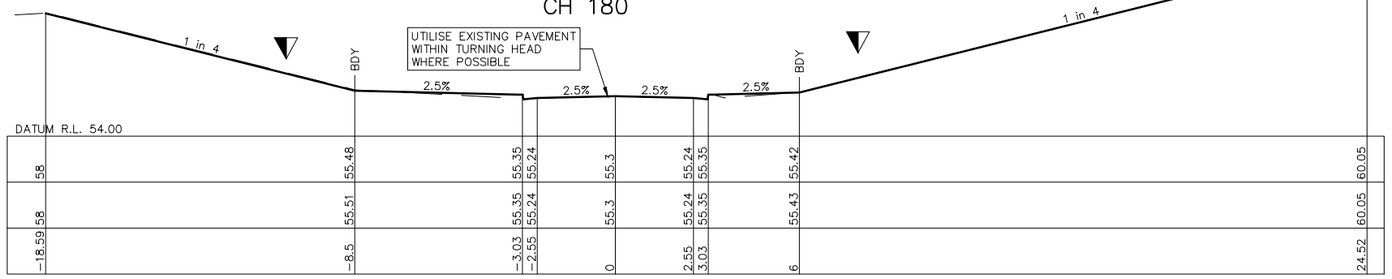

CH 177.69 – LIMIT OF WORKS

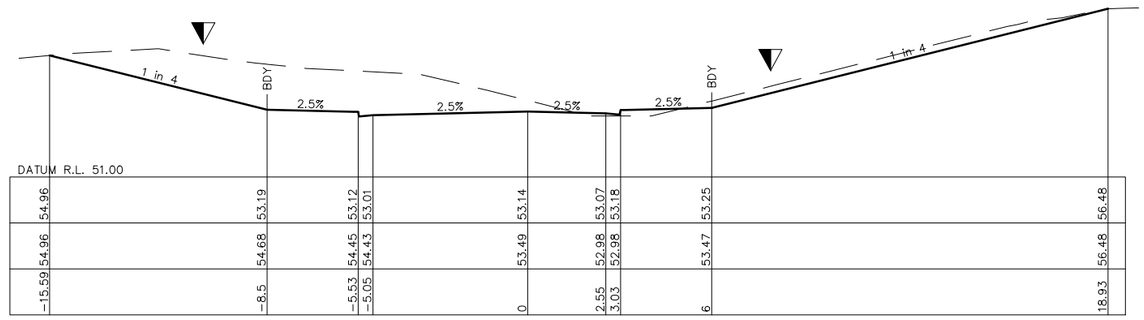

CH 213.5

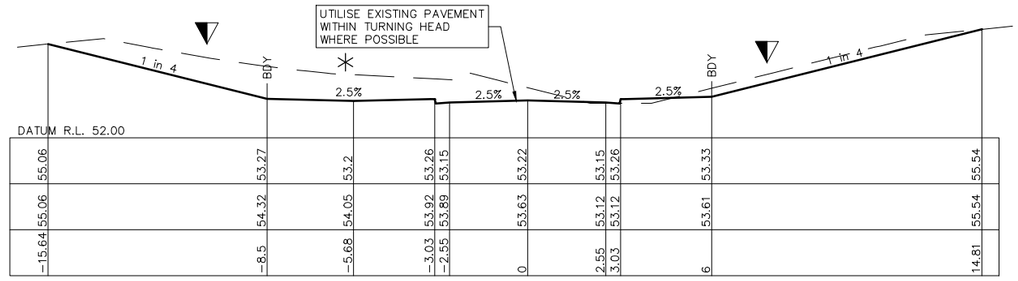

CH 211.9

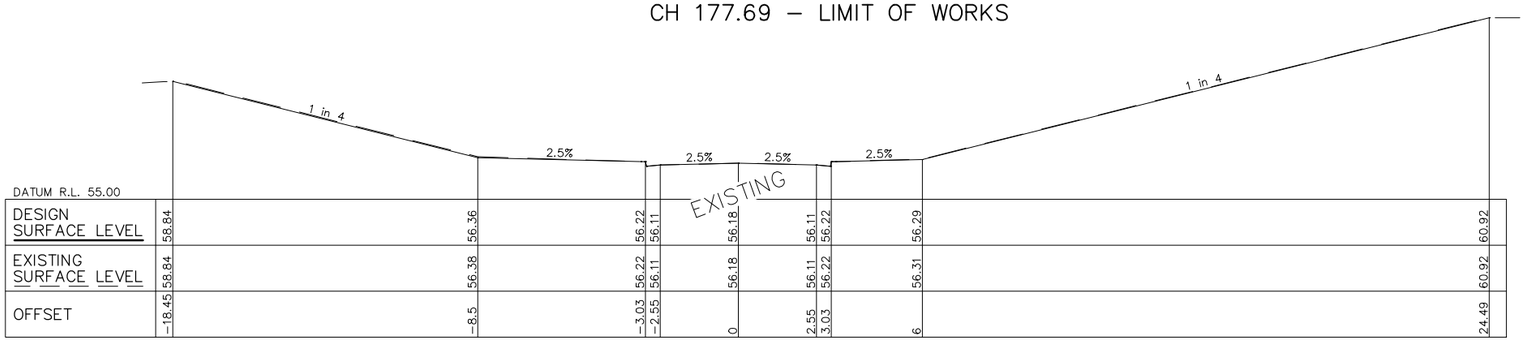

CH 165

These plans are referred to in certificate no. **16746** approved by:

Eric Hausfeld
Registered Certifier

Registration No: BDC 2416

Categories: Certifier – Subdivision
Certifier – Strata
Certifier – Stormwater
Certifier – Road & Drainage
Certifier – Hydraulic (stormwater)

Land Development Certificates
www.LDC.com.au

DIAL1100 BEFORE YOU DIG

CONSTRUCTION ISSUE

REV.	DATE	AMENDMENT	DESIGN	DRAWN	CHECKED	APPROVED
1	21.01.22	ISSUED FOR CONSTRUCTION	B.M.	J.J.	B.M.	B.M.

SCALES: A1 1:100 — 0 2.5 5.0m — A3 1:200

DESIGN FILE S:\300001\DESIGN\12D\STAGE 2 CC\DESIGN FILE.project

ALL DIMENSIONS ARE IN METRES. DO NOT SCALE

adw Johnson

Central Coast
5 Pioneer Avenue,
P.O. Box 3717,
Tuggerah N.S.W. 2259
Phone: (02) 4305 4300
Fax: (02) 4305 4399
email: coast@adwjohnson.com.au
www.adwjohnson.com.au
ABN 62 129 445 398

CLIENT: FRASERS PROPERTY

PROPERTY DESCRIPTION: LOT 100 D.P.1262209 & LOT 1 D.P.859537
EPPING ROAD & LYONPARK ROAD,
MACQUARIE PARK
SSDA 8903

SURVEYED: ADW Johnson

DATUM: GDA94 M.G.A. ZONE 56 A.H.D.

PROJECT: PROPOSED SUBDIVISION

PLAN TITLE: ROAD CROSS SECTIONS
ROAD No.02
SHEET 1

PROJECT No.	DISCIPLINE	NUMBER	REV.
300001(2) –	ENG –	240	1

Plotted By: Ben Myles Plot Date: 21/01/22 2:29:18PM Cad File: S:\300001\DRAWINGS\ENGINEERING\CIVIL\STAGE 2 CC ENG\300001(2)-ENG-240.DWG

300001(2)-ENG-241

REFER SHEET 501 FOR SITE REGRADE DETAILS

BERM TO BE PROVIDED AT BASE OF ALL BATTERS. REFER SHEET 202 FOR DETAILS.

MODIFY CROSS FALL OF PLANTED ZONES TO MAINTAIN 2.5% FOOTPATH

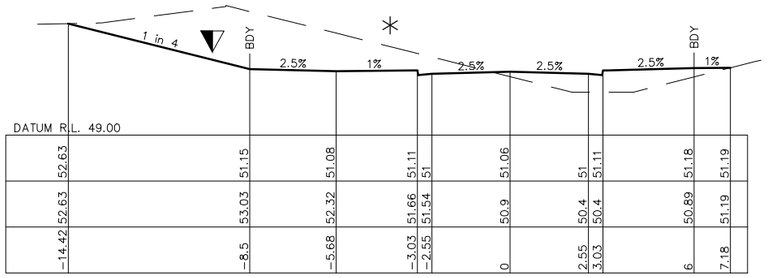

CH 255

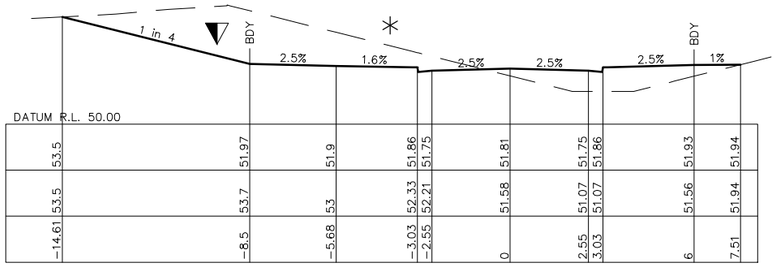

CH 240

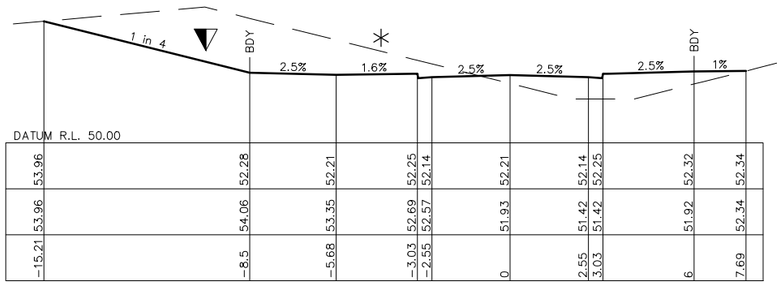

CH 232.1

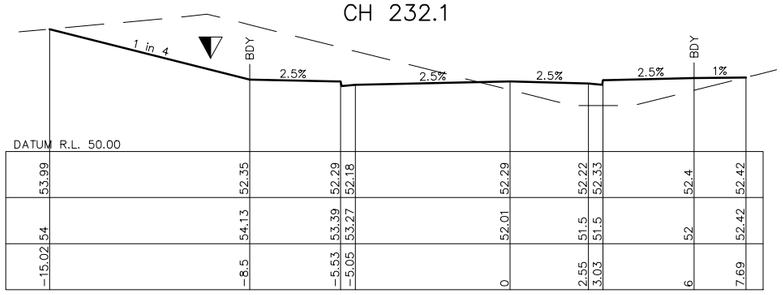

CH 230.5

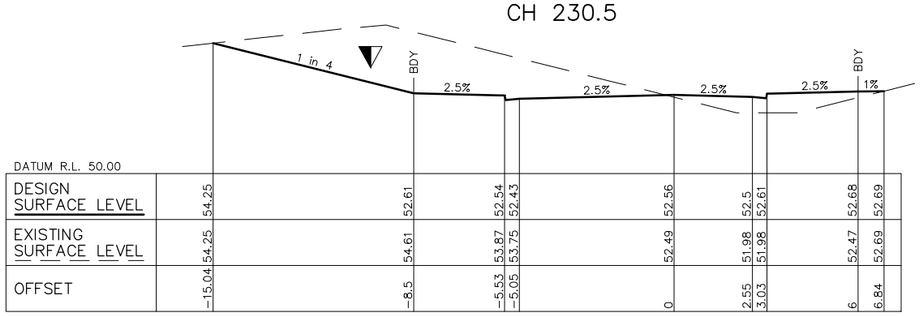

CH 225

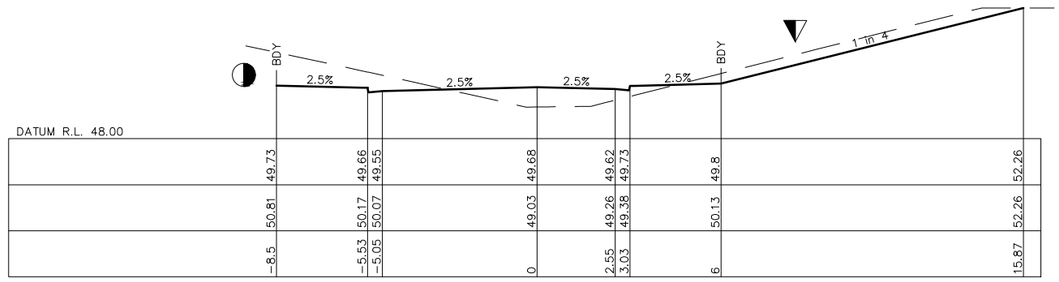

CH 285

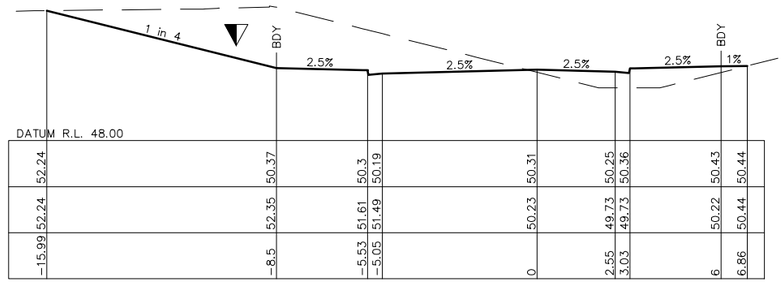

CH 270

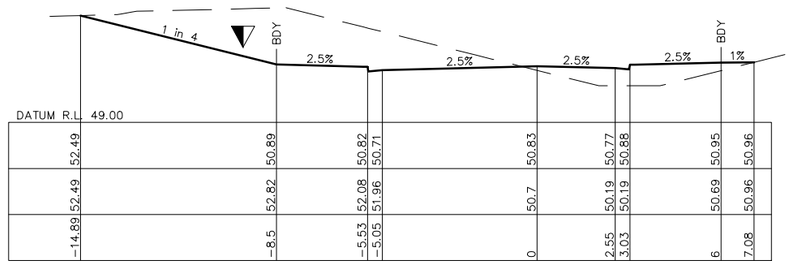

CH 259.53

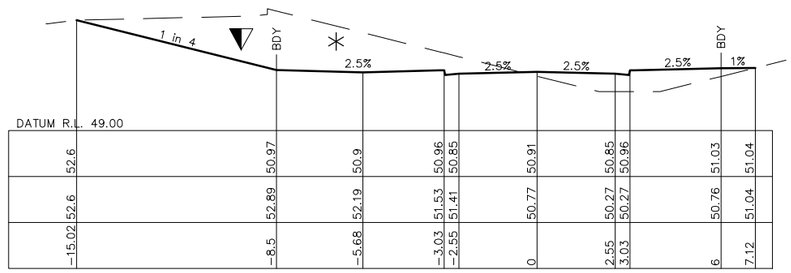

CH 257.93

These plans are referred to in certificate no. **16746** approved by:

Eric Hausfeld
Registered Certifier

Registration No: BDC 2416

Categories: Certifier – Subdivision
Certifier – Strata
Certifier – Stormwater
Certifier – Road & Drainage
Certifier – Hydraulic (stormwater)

Land Development Certificates
www.LDC.com.au

DIAL1100 BEFORE YOU DIG

CONSTRUCTION ISSUE

REV.	DATE	AMENDMENT	DESIGN	DRAWN	CHECKED	APPROVED
1	21.01.22	ISSUED FOR CONSTRUCTION	B.M.	J.J.	B.M.	B.M.

SCALES: A1 1:100 — 0 2.5 5.0m — A3 1:200

DESIGN FILE S:\300001\DESIGN\12D\STAGE 2 CC\DESIGN FILE.project

ALL DIMENSIONS ARE IN METRES. DO NOT SCALE

adw Johnson

Central Coast
5 Pioneer Avenue,
P.O. Box 3717,
Tuggerah N.S.W. 2259
Phone: (02) 4305 4300
Fax: (02) 4305 4399
email: coast@adwjohnson.com.au
www.adwjohnson.com.au
ABN 62 129 445 398

CLIENT: FRASERS PROPERTY

PROPERTY DESCRIPTION
LOT 100 D.P.1262209 & LOT 1 D.P.859537
EPPING ROAD & LYONPARK ROAD,
MACQUARIE PARK
SSDA 8903

SURVEYED: ADW Johnson
DATUM: GDA94 M.G.A. ZONE 56 A.H.D.

PROJECT: PROPOSED SUBDIVISION

PLAN TITLE: ROAD CROSS SECTIONS
ROAD No.02
SHEET 2

PROJECT No.	DISCIPLINE	NUMBER	REV.
300001(2) -	ENG -	241	1

100mm AT FULL SIZE

This plan includes coloured information. If you have a black and white copy you do not have all of the information. This note is coloured RED.

Plotted By: Ben Myles Plot Date: 21/01/22 2:29:22PM Cad File: S:\300001\DRAWINGS\ENGINEERING\CIVIL\STAGE 2 CC ENG\300001(2)-ENG-241.DWG

300001(2)-ENG-242

REFER SHEET 501 FOR SITE REGRADE DETAILS

BERM TO BE PROVIDED AT BASE OF ALL BATTERS. REFER SHEET 202 FOR DETAILS.

MODIFY CROSS FALL OF PLANTED ZONES TO MAINTAIN 2.5% FOOTPATH

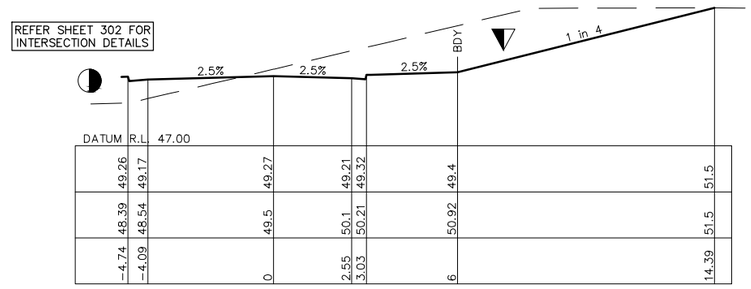

CH 298.54

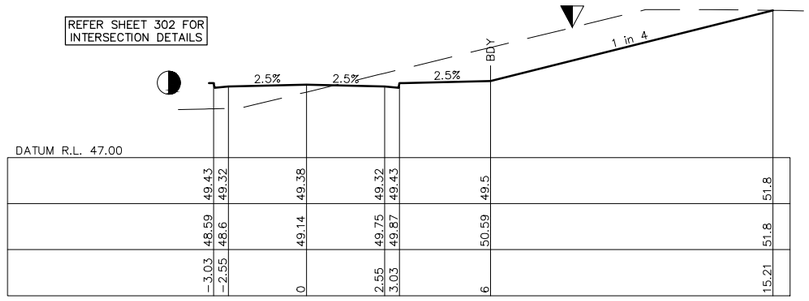

CH 294.35

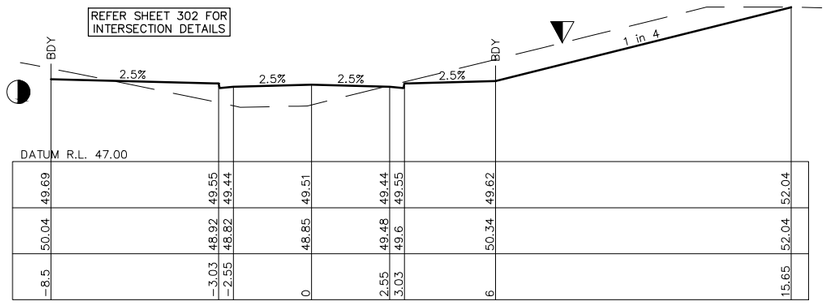

CH 290.13

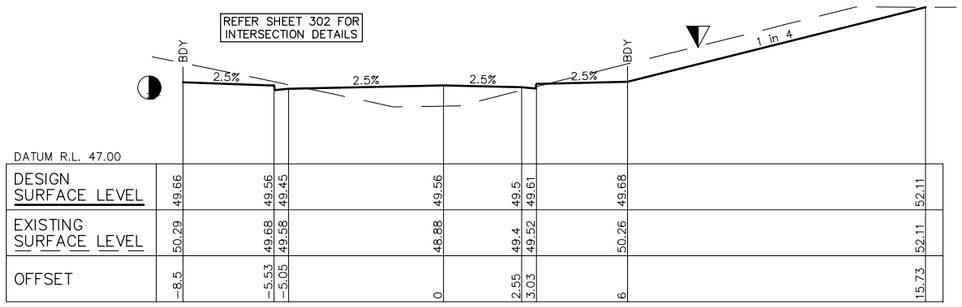

CH 288.53

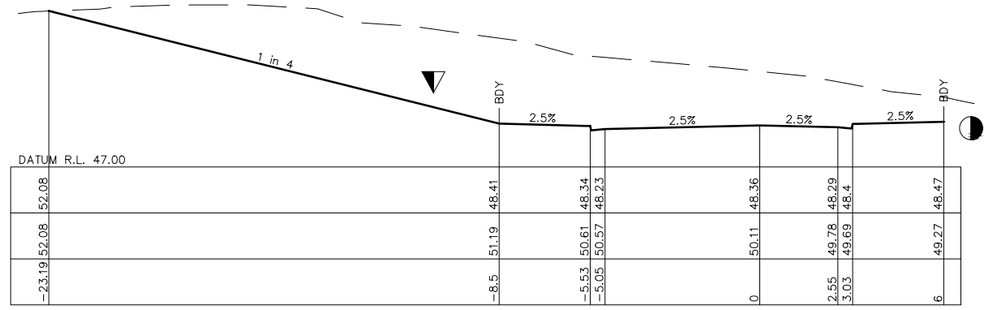

CH 326.44

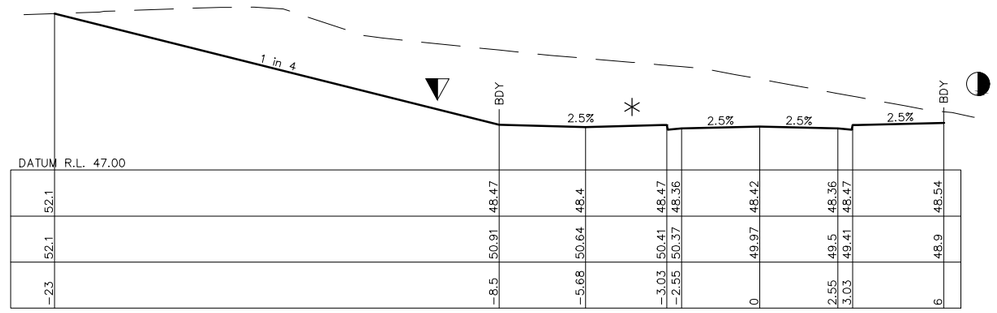

CH 324.84

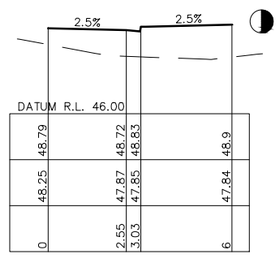

CH 315

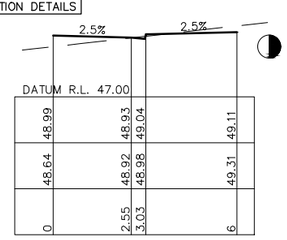

CH 308.55

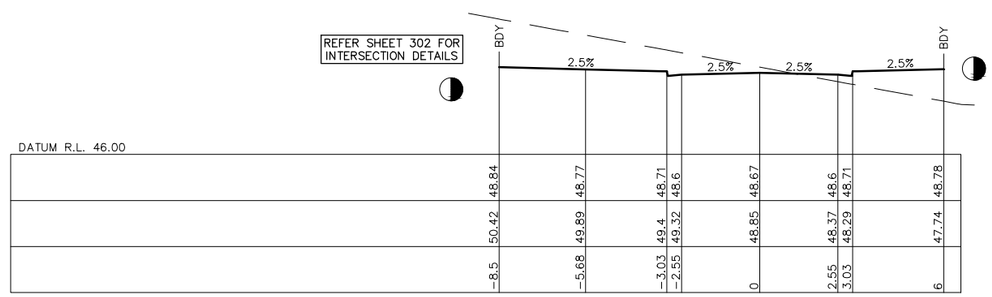

CH 318.41

These plans are referred to in certificate no. **16746** approved by:

Eric Hausfeld
Registered Certifier

Registration No: BDC 2416

Categories: Certifier – Subdivision
Certifier – Strata
Certifier – Stormwater
Certifier – Road & Drainage
Certifier – Hydraulic (stormwater)

Land Development Certificates
www.LDC.com.au

DIAL 1100 BEFORE YOU DIG

CONSTRUCTION ISSUE

REV.	DATE	AMENDMENT	DESIGN	DRAWN	CHECKED	APPROVED
1	21.01.22	ISSUED FOR CONSTRUCTION	B.M.	J.J.	B.M.	B.M.

SCALES: A1 1:100 — 0 2.5 5.0m — A3 1:200

DESIGN FILE S:\300001\DESIGN\12D\STAGE 2 CC\DESIGN FILE.project

ALL DIMENSIONS ARE IN METRES. DO NOT SCALE

adw Johnson
Central Coast
5 Pioneer Avenue,
P.O. Box 3717,
Tuggerah N.S.W. 2259
Phone: (02) 4305 4300
Fax: (02) 4305 4399
email: coast@adwjohnson.com.au
www.adwjohnson.com.au
ABN 62 129 445 398

CLIENT: FRASERS PROPERTY

PROPERTY DESCRIPTION: LOT 100 D.P.1262209 & LOT 1 D.P.859537
EPPING ROAD & LYONPARK ROAD,
MACQUARIE PARK
SSDA 8903

SURVEYED: ADW Johnson
DATUM: GDA94 M.G.A. ZONE 56 A.H.D.

PROJECT: PROPOSED SUBDIVISION

PLAN TITLE: ROAD CROSS SECTIONS
ROAD No.02
SHEET 3

PROJECT No.	DISCIPLINE	NUMBER	REV.
300001(2)	ENG	242	1

Plotted By: Ben Myles Plot Date: 21/01/22 2:29:26PM Cad File: S:\300001\DRAWINGS\ENGINEERING\CIVIL\STAGE 2 CC ENG\300001(2)-ENG-242.DWG

100mm AT FULL SIZE

This plan includes coloured information. If you have a black and white copy you do not have all of the information. This note is coloured RED.

300001(2)-ENG-243

BERM TO BE PROVIDED AT BASE OF ALL BATTERS. REFER SHEET 202 FOR DETAILS.

MODIFY CROSS FALL OF PLANTED ZONES TO MAINTAIN 2.5% FOOTPATH

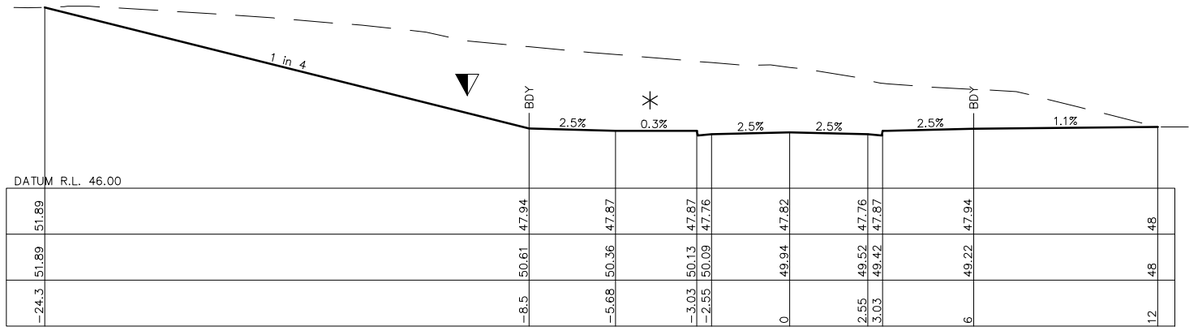

CH 339.09

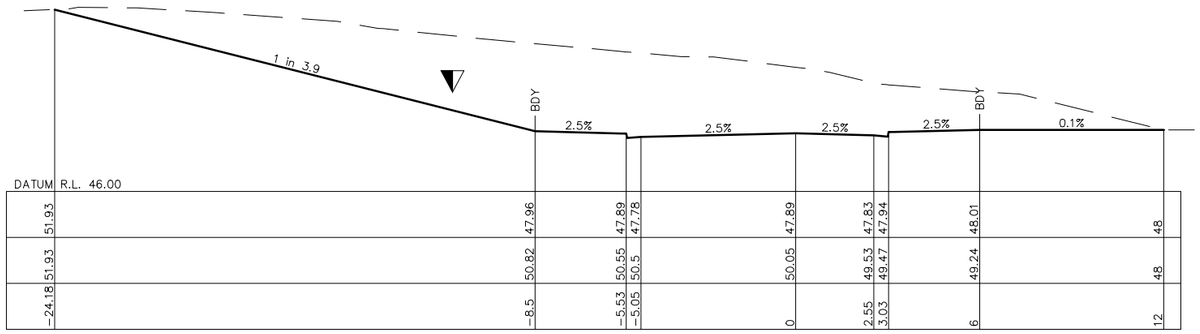

CH 337.44

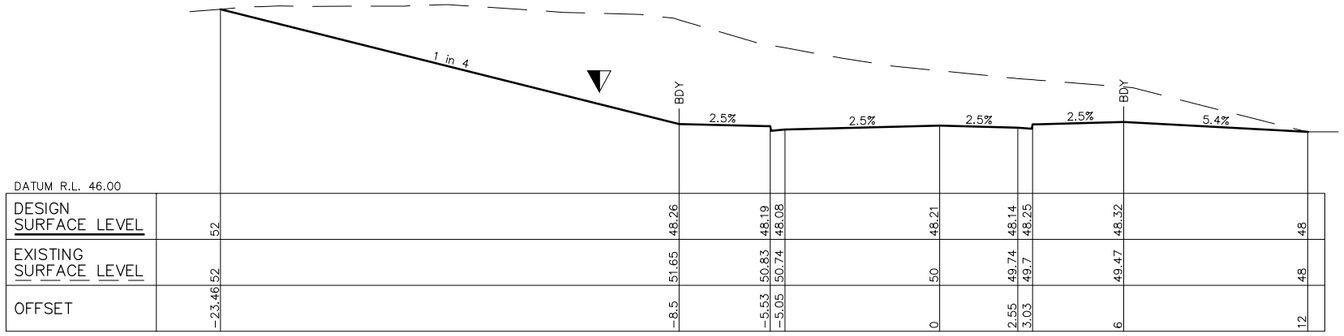

CH 330

These plans are referred to in certificate no. **16746** approved by:

Eric Hausfeld
Registered Certifier

Registration No: BDC 2416

Categories: Certifier – Subdivision
Certifier – Strata
Certifier – Stormwater
Certifier – Road & Drainage
Certifier – Hydraulic (stormwater)

Land Development Certificates
www.LDC.com.au

DIAL 1100 BEFORE YOU DIG

CONSTRUCTION ISSUE

REV.	DATE	AMENDMENT	DESIGN	DRAWN	CHECKED	APPROVED
1	21.01.22	ISSUED FOR CONSTRUCTION	B.M.	J.J.	B.M.	B.M.

SCALES: A1 1:100 — 0 2.5 5.0m — A3 1:200

DESIGN FILE S:\300001\DESIGN\12D\STAGE 2 CC\DESIGN FILE.project

ALL DIMENSIONS ARE IN METRES. DO NOT SCALE

adw Johnson
Central Coast
5 Pioneer Avenue,
P.O. Box 3717,
Tuggerah N.S.W. 2259
Phone: (02) 4305 4300
Fax: (02) 4305 4399
email: coast@adwjohnson.com.au
www.adwjohnson.com.au
ABN 62 129 445 398

CLIENT: FRASERS PROPERTY

PROPERTY DESCRIPTION: LOT 100 D.P.1262209 & LOT 1 D.P.859537
EPPING ROAD & LYONPARK ROAD,
MACQUARIE PARK
SSDA 8903

SURVEYED: ADW Johnson
DATUM: GDA94 M.G.A. ZONE 56 A.H.D.

PROJECT: PROPOSED SUBDIVISION

PLAN TITLE: ROAD CROSS SECTIONS
ROAD No.02
SHEET 4

PROJECT No. 300001(2) – DISCIPLINE ENG – NUMBER 243 REV. 1

Plotted By: Ben Myles Plot Date: 21/01/22 2:29:30PM Cad File: S:\300001\DRAWINGS\ENGINEERING\CIVIL\STAGE 2 CC ENG\300001(2)-ENG-243.DWG

100mm AT FULL SIZE

This plan includes coloured information. If you have a black and white copy you do not have all of the information. This note is coloured RED.

300001(2)-ENG-244

REFER SHEET 501 FOR SITE REGRADE DETAILS

BERM TO BE PROVIDED AT BASE OF ALL BATTERS. REFER SHEET 202 FOR DETAILS.

MODIFY CROSS FALL OF PLANTED ZONES TO MAINTAIN 2.5% FOOTPATH

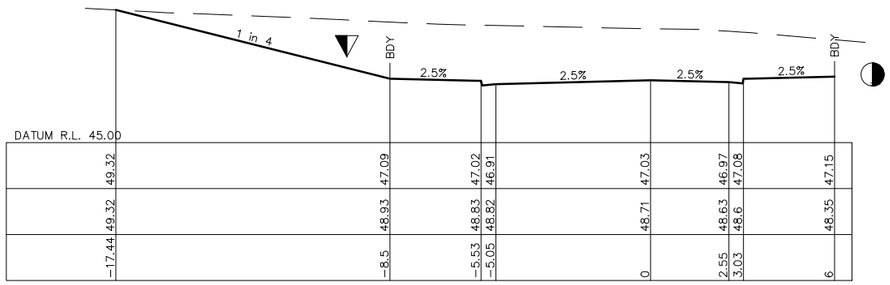

CH 360

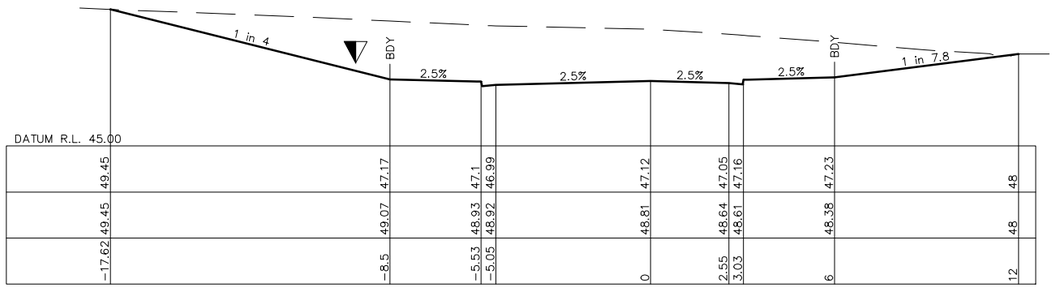

CH 357.14

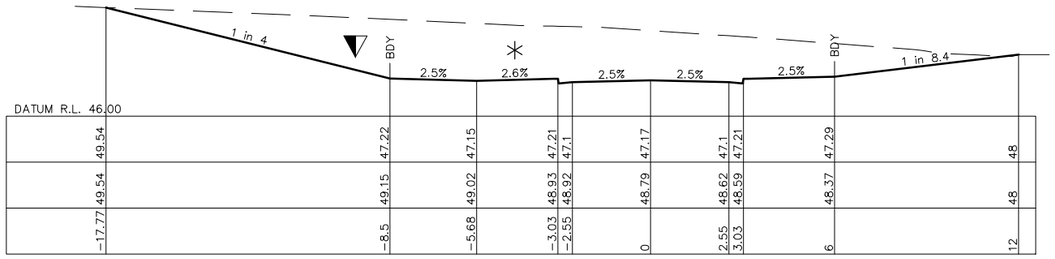

CH 355.54

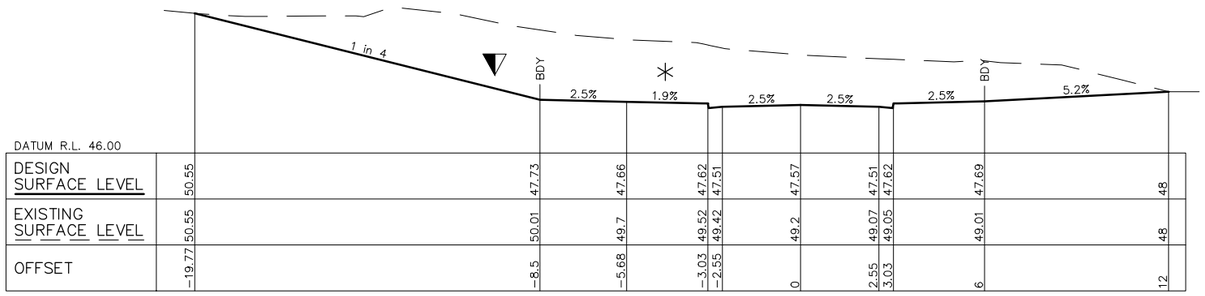

CH 345

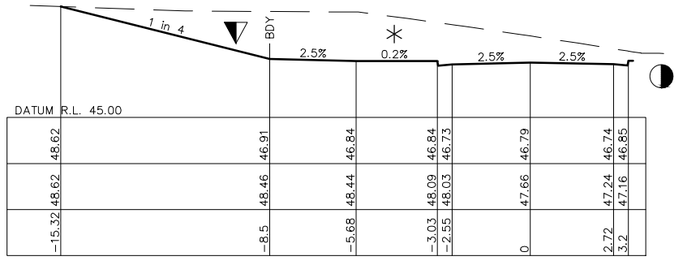

CH 370.15

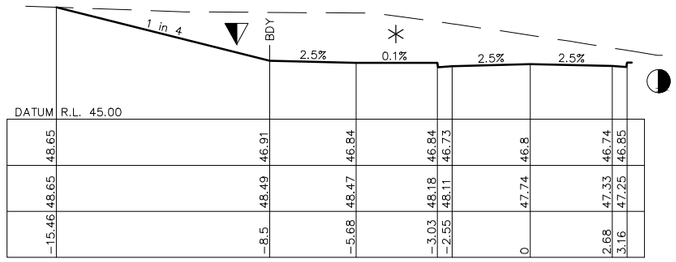

CH 369.74

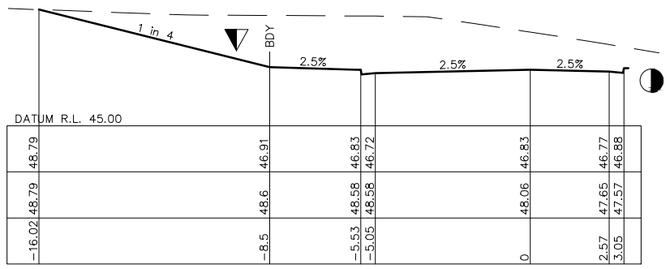

CH 368.14

CH 366.92

REFER SHEET 301 FOR INTERSECTION DETAILS

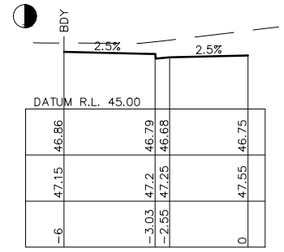

CH 377.21

REFER SHEET 301 FOR INTERSECTION DETAILS

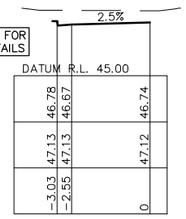

CH 375

These plans are referred to in certificate no. **16746** approved by:

Eric Hausfeld
Registered Certifier

Registration No: BDC 2416
Categories: Certifier – Subdivision
Certifier – Strata
Certifier – Stormwater
Certifier – Road & Drainage
Certifier – Hydraulic (stormwater)

Land Development Certificates
www.LDC.com.au

DIAL 1100 BEFORE YOU DIG

CONSTRUCTION ISSUE

REV.	DATE	AMENDMENT	DESIGN	DRAWN	CHECKED	APPROVED
1	21.01.22	ISSUED FOR CONSTRUCTION	B.M.	J.J.	B.M.	B.M.

SCALES: A1 1:100 — 0 2.5 5.0m — A3 1:200

DESIGN FILE S:\300001\DESIGN\12D\STAGE 2 CC\DESIGN FILE.project

ALL DIMENSIONS ARE IN METRES. DO NOT SCALE

adw Johnson
Central Coast
5 Pioneer Avenue,
P.O. Box 3717,
Tuggerah N.S.W. 2259
Phone: (02) 4305 4300
Fax: (02) 4305 4399
email: coast@adwjohnson.com.au
www.adwjohnson.com.au
ABN 62 129 445 398

CLIENT: FRASERS PROPERTY

PROPERTY DESCRIPTION: LOT 100 D.P.1262209 & LOT 1 D.P.859537
EPPING ROAD & LYONPARK ROAD,
MACQUARIE PARK
SSDA 8903

SURVEYED: ADW Johnson
DATUM: GDA94 M.G.A. ZONE 56 A.H.D.

PROJECT: PROPOSED SUBDIVISION

PLAN TITLE: ROAD CROSS SECTIONS
ROAD No.02
SHEET 5

PROJECT No. 300001(2) – DISCIPLINE ENG – NUMBER 244 REV. 1

Plotted By: Ben Myles Plot Date: 21/01/22 2:29:34PM Cad File: S:\300001\DRAWINGS\ENGINEERING\CIVIL\STAGE 2 CC ENG\300001(2)-ENG-244.DWG

100mm AT FULL SIZE

This plan includes coloured information. If you have a black and white copy you do not have all of the information. This note is coloured RED.

300001(2)-ENG-301

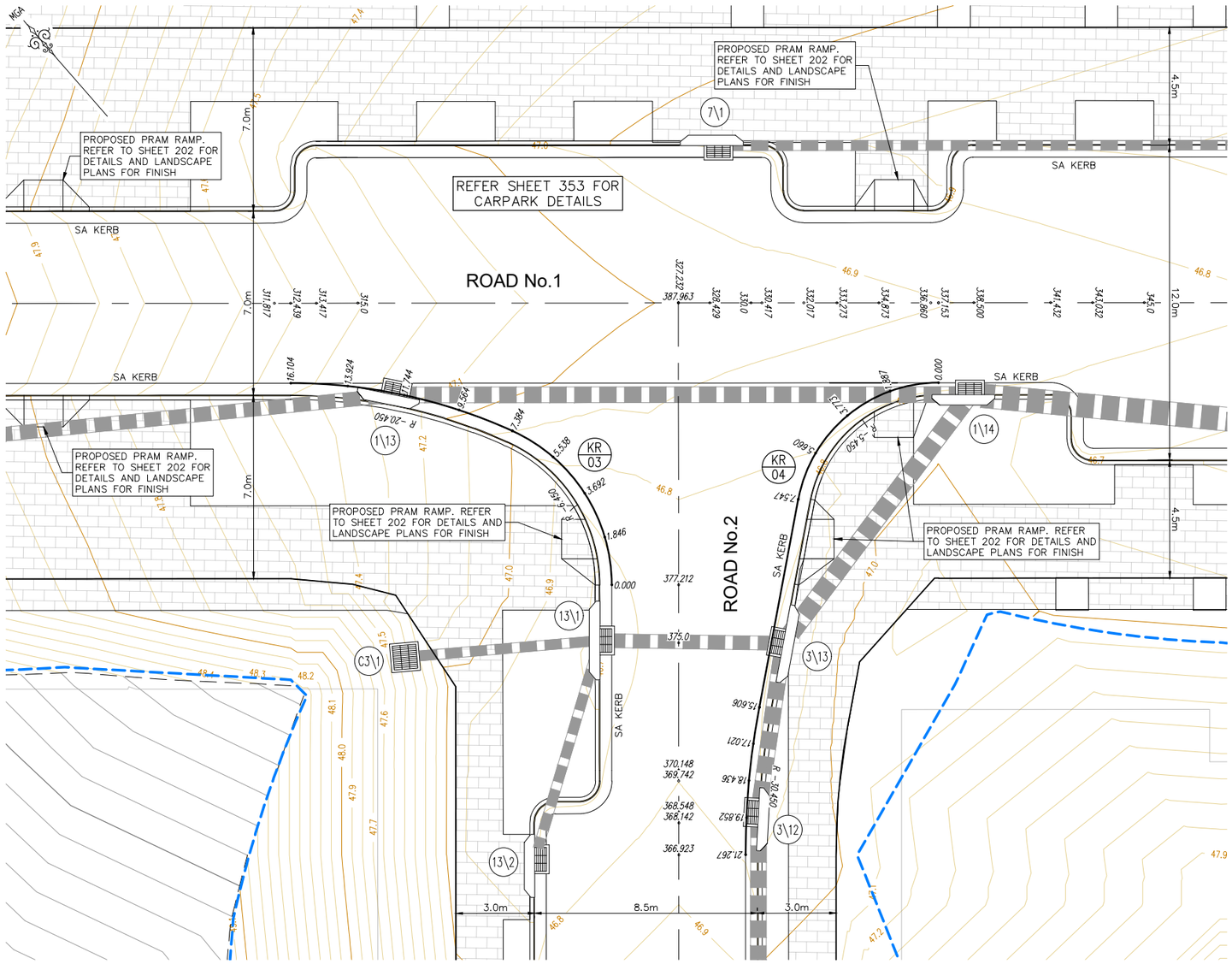

INTERSECTION PLAN

SCALE 1:100

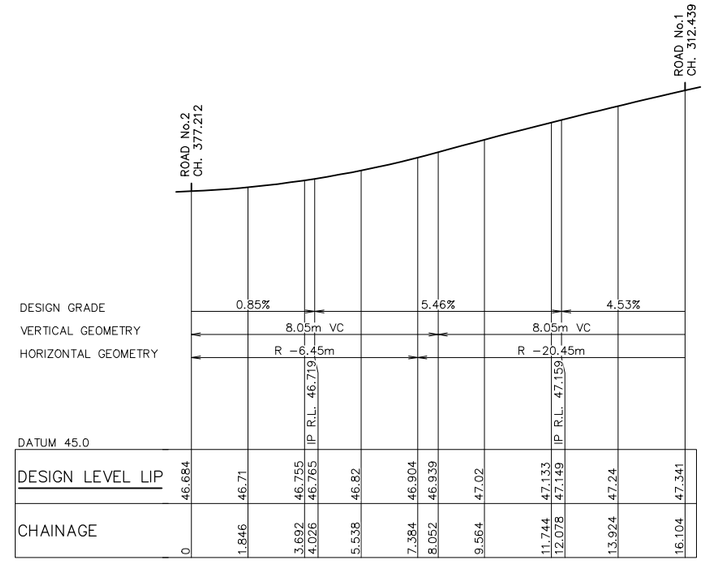

LONGITUDINAL SECTION KR03

HORIZONTAL SCALE 1:100
VERTICAL SCALE 1:20

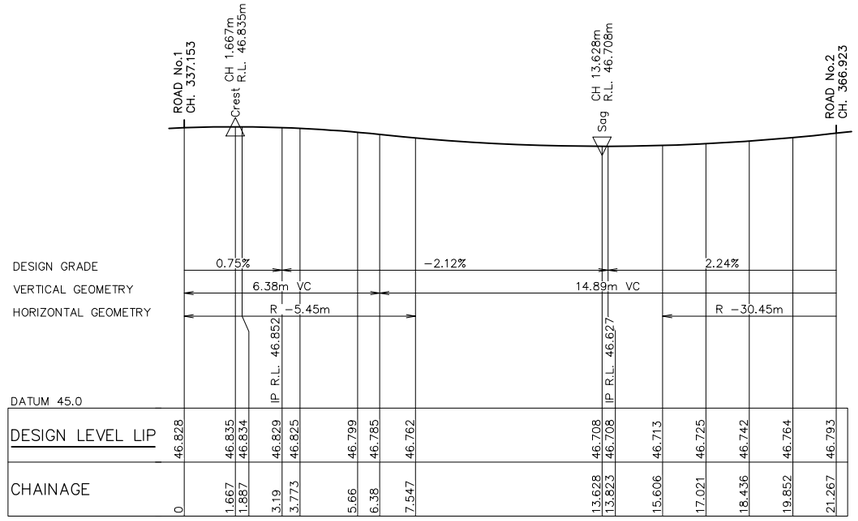

LONGITUDINAL SECTION KR04

HORIZONTAL SCALE 1:100
VERTICAL SCALE 1:20

KR03 – SETOUT TABLE

PT	CHAINAGE	EASTING	NORTHING	BEARING	RAD/SPIRAL	A.LENGTH	DEFL.ANGLE
IP 1	0.000	325688.263	6260379.127	41°10'57.30"			
IP 2	3.692	325691.000	6260382.255		R = −6.450	7.384	65°35'42.44"
CC	7.384	325689.282	6260386.040	335°35'14.85"			
IP 3	11.744	325687.452	6260390.071		R = −20.450	8.720	24°25'47.55"
IP 4	16.104	325684.119	6260392.985	311°09'27.31"			

KR04 – SETOUT TABLE

PT	CHAINAGE	EASTING	NORTHING	BEARING	RAD/SPIRAL	A.LENGTH	DEFL.ANGLE
IP 1	0.000	325702.719	6260376.712	311°10'55.80"			
IP 2	3.774	325699.317	6260379.688		R = −5.450	7.547	79°20'48.12"
CT	7.547	325695.763	6260376.895	231°50'07.69"			
TC	15.606	325689.427	6260371.915	231°50'07.69"			
IP 3	18.437	325687.195	6260370.161		R = −30.450	5.660	10°39'01.94"
IP 4	21.267	325685.326	6260368.025	221°11'05.75"			

LEGEND

- LIMIT OF WORKS BOUNDARY
- PROPOSED LOT BOUNDARY
- EXISTING LOT BOUNDARY
- MAJOR CONTOURS
- MINOR CONTOURS
- PROPOSED KERB
- EXISTING KERB
- EXTENTS OF BATTER
- PROPOSED FOOTPATH
- PROPOSED STORMWATER
- ex sw — EXISTING STORMWATER
- PROPOSED SW PIT
- PROPOSED LINTEL
- PROPOSED HEADWALL
- 1\1 — PIT LABEL

CONTOUR INTERVAL = 0.1m

GENERAL NOTES:–

1. FOR TYPICAL ROAD CROSS SECTIONS, KERB PROFILES REFER SHEET 201 AND PAVEMENT DETAILS REFER TO SHEET 151.
2. SETOUT INFORMATION IS TO BE VERIFIED BY THE CONTRACTOR AGAINST THE PLAN VIEW, LONGITUDINAL SECTIONS AND ELECTRONIC 12D DATA BEFORE BEING USED. IF THERE IS A DISCREPANCY THE SUPERINTENDENT IS TO BE NOTIFIED AND DIRECTION TO BE PROVIDED IN WRITING BEFORE PROCEEDING.
3. REFER TO SHEET 901 FOR COMBINED SERVICES PLAN.
4. REFER DRAWINGS PREPARED BY R.A.R.I. FOR SEWER AND WATER DETAILS.

CAUTION:

1. IT IS THE RESPONSIBILITY OF THE CIVIL WORKS CONTRACTOR TO DETERMINE THE LOCATION & LEVEL OF EXISTING SERVICES USING NON DESTRUCTIVE METHODS PRIOR TO COMMENCING WORKS ON SITE.

These plans are referred to in certificate no. **16746** approved by:
Eric Hausfeld
Registered Certifier
Registration No: BDC 2416
Categories: Certifier – Subdivision, Certifier – Strata, Certifier – Stormwater, Certifier – Road & Drainage, Certifier – Hydraulic (stormwater)
Land Development Certificates
www.LDC.com.au

DIAL 1100 BEFORE YOU DIG

CONSTRUCTION ISSUE

REV.	DATE	AMENDMENT	DESIGN	DRAWN	CHECKED	APPROVED
1	21.01.22	ISSUED FOR CONSTRUCTION	B.M.	J.J.	B.M.	B.M.

SCALES: A1 1:100 (0, 2.5, 5.0m) A3 1:200; A1 1:20 (0, 0.5, 1.0m) A3 1:40

ALL DIMENSIONS ARE IN METRES. DO NOT SCALE

adw Johnson
Central Coast
5 Pioneer Avenue,
P.O. Box 3717,
Tuggerah N.S.W. 2259
Phone: (02) 4305 4300
Fax: (02) 4305 4399
email: coast@adwjohnson.com.au
www.adwjohnson.com.au
ABN 62 129 445 398

CLIENT: FRASERS PROPERTY

PROPERTY DESCRIPTION: LOT 100 D.P.1262209 & LOT 1 D.P.859537, EPPING ROAD & LYONPARK ROAD, MACQUARIE PARK, SSDA 8903

PROJECT: PROPOSED SUBDIVISION

PLAN TITLE: INTERSECTION DETAILS, KERB RETURNS KR03 & KR04

SURVEYED: ADW Johnson | DATUM: GDA94 M.G.A. ZONE 56 A.H.D.

PROJECT No. 300001(2) – DISCIPLINE ENG – NUMBER 301 | REV. 1

DESIGN FILE S:\300001\DESIGN\12D\STAGE 2 CC\DESIGN FILE.project

Plotted By: Ben Myles Plot Date: 21/01/22 2:29:41PM Cad File: S:\300001\DRAWINGS\ENGINEERING\CIVIL\STAGE 2 CC ENG\300001(2)-ENG-301.DWG

100mm AT FULL SIZE

This plan includes coloured information. If you have a black and white copy you do not have all of the information. This note is coloured RED.

300001(2)-ENG-302

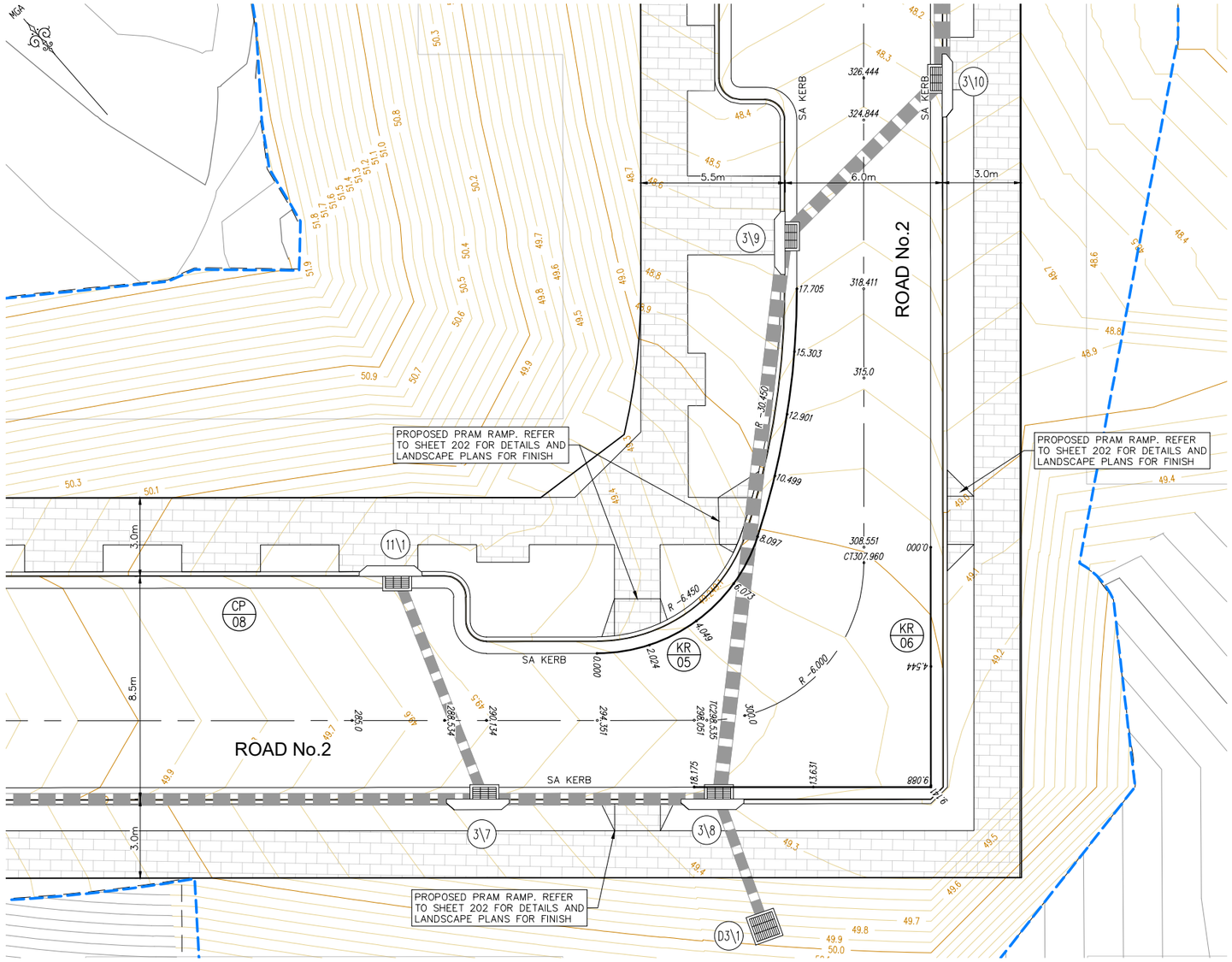

INTERSECTION PLAN

SCALE 1:100

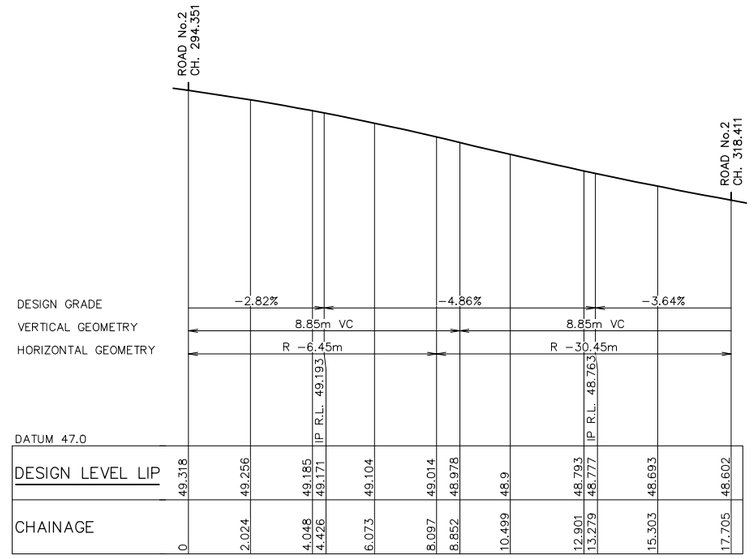

LONGITUDINAL SECTION KR05

HORIZONTAL SCALE 1:100
VERTICAL SCALE 1:20

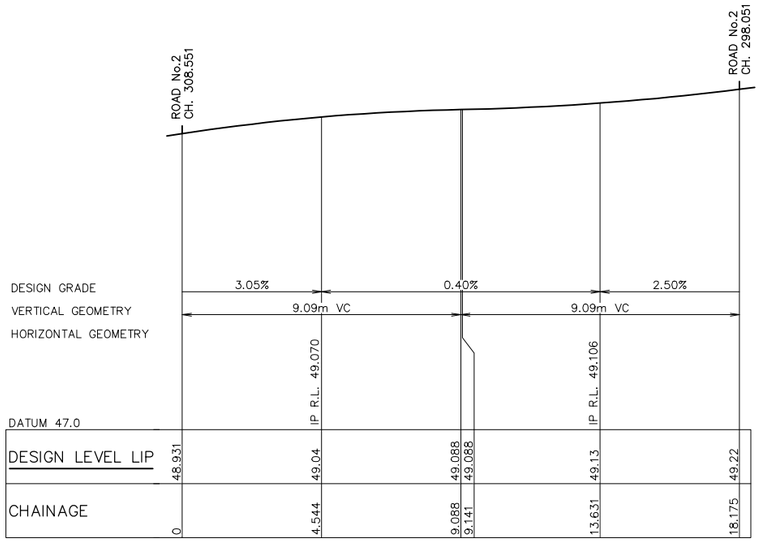

LONGITUDINAL SECTION KR06

HORIZONTAL SCALE 1:100
VERTICAL SCALE 1:20

KR05 – SETOUT TABLE

PT	CHAINAGE	EASTING	NORTHING	BEARING	RAD/SPIRAL	A.LENGTH	DEFL.ANGLE
IP 1	0.000	325634.648	6260329.440	131°10'58.81"			
IP 2	4.048	325638.170	6260326.358		R = -6.450	8.097	71°55'31.14"
CC	8.097	325642.192	6260328.751	59°15'27.66"			
IP 3	12.901	325646.355	6260331.227		R = -30.450	9.608	18°04'44.13"
IP 4	17.705	325649.545	6260334.873	41°10'43.54"			

KR06 – SETOUT TABLE

PT	CHAINAGE	EASTING	NORTHING	BEARING
IP 1	0.000	325646.890	6260324.094	221°10'59.00"
IP 2	9.141	325640.872	6260317.214	
IP 3	18.175	325634.072	6260323.163	311°10'57.73"

LEGEND

- LIMIT OF WORKS BOUNDARY
- PROPOSED LOT BOUNDARY
- EXISTING LOT BOUNDARY
- MAJOR CONTOURS
- MINOR CONTOURS
- PROPOSED KERB
- EXISTING KERB
- EXTENTS OF BATTER
- PROPOSED FOOTPATH
- PROPOSED STORMWATER
- EXISTING STORMWATER (ex sw)
- PROPOSED SW PIT
- PROPOSED LINTEL
- PROPOSED HEADWALL
- PIT LABEL

CONTOUR INTERVAL = 0.1m

GENERAL NOTES: –

1. FOR TYPICAL ROAD CROSS SECTIONS, KERB PROFILES REFER SHEET 201 AND PAVEMENT DETAILS REFER TO SHEET 151.
2. SETOUT INFORMATION IS TO BE VERIFIED BY THE CONTRACTOR AGAINST THE PLAN VIEW, LONGITUDINAL SECTIONS AND ELECTRONIC 12D DATA BEFORE BEING USED. IF THERE IS A DISCREPANCY THE SUPERINTENDENT IS TO BE NOTIFIED AND DIRECTION TO BE PROVIDED IN WRITING BEFORE PROCEEDING.
3. REFER TO SHEET 901 FOR COMBINED SERVICES PLAN.
4. REFER DRAWINGS PREPARED BY R.A.R.I. FOR SEWER AND WATER DETAILS.

CAUTION:

1. IT IS THE RESPONSIBILITY OF THE CIVIL WORKS CONTRACTOR TO DETERMINE THE LOCATION & LEVEL OF EXISTING SERVICES USING NON DESTRUCTIVE METHODS PRIOR TO COMMENCING WORKS ON SITE.

These plans are referred to in certificate no. **16746** approved by:
Eric Hausfeld
Registered Certifier
Registration No: BDC 2416
Categories: Certifier – Subdivision; Certifier – Strata; Certifier – Stormwater; Certifier – Road & Drainage; Certifier – Hydraulic (stormwater)
Land Development Certificates
www.LDC.com.au

DIAL 1100 BEFORE YOU DIG

CONSTRUCTION ISSUE

REV.	DATE	AMENDMENT	DESIGN	DRAWN	CHECKED	APPROVED
1	21.01.22	ISSUED FOR CONSTRUCTION	B.M.	J.J.	B.M.	B.M.

SCALES: A1 1:100 (0, 2.5, 5.0m) A3 1:200; A1 1:20 (0, 0.5, 1.0m) A3 1:40

DESIGN FILE S:\300001\DESIGN\12D\STAGE 2 CC\DESIGN FILE.project

ALL DIMENSIONS ARE IN METRES. DO NOT SCALE

adw Johnson
Central Coast
5 Pioneer Avenue,
P.O. Box 3717,
Tuggerah N.S.W. 2259
Phone: (02) 4305 4300
Fax: (02) 4305 4399
email: coast@adwjohnson.com.au
www.adwjohnson.com.au
ABN 62 129 445 398

CLIENT: FRASERS PROPERTY

PROPERTY DESCRIPTION: LOT 100 D.P.1262209 & LOT 1 D.P.859537, EPPING ROAD & LYONPARK ROAD, MACQUARIE PARK, SSDA 8903

SURVEYED: ADW Johnson | DATUM: GDA94 M.G.A. ZONE 56 A.H.D.

PROJECT: PROPOSED SUBDIVISION

PLAN TITLE: INTERSECTION DETAILS, KERB RETURNS KR05 & KR06

PROJECT No.	DISCIPLINE	NUMBER	REV.
300001(2) –	ENG –	302	1

Plotted By: Ben Myles Plot Date: 21/01/22 2:29:48PM Cad File: S:\300001\DRAWINGS\ENGINEERING\CIVIL\STAGE 2 CC ENG\300001(2)-ENG-302.DWG

100mm AT FULL SIZE

This plan includes coloured information. If you have a black and white copy you do not have all of the information. This note is coloured RED.

300001(2)-ENG-303

THIS DRAWING IS PROVIDED FOR INFORMATION ONLY. REFER TO S138 DRAWING SET REFERENCE 300001(S138) FOR FINAL DETAILS

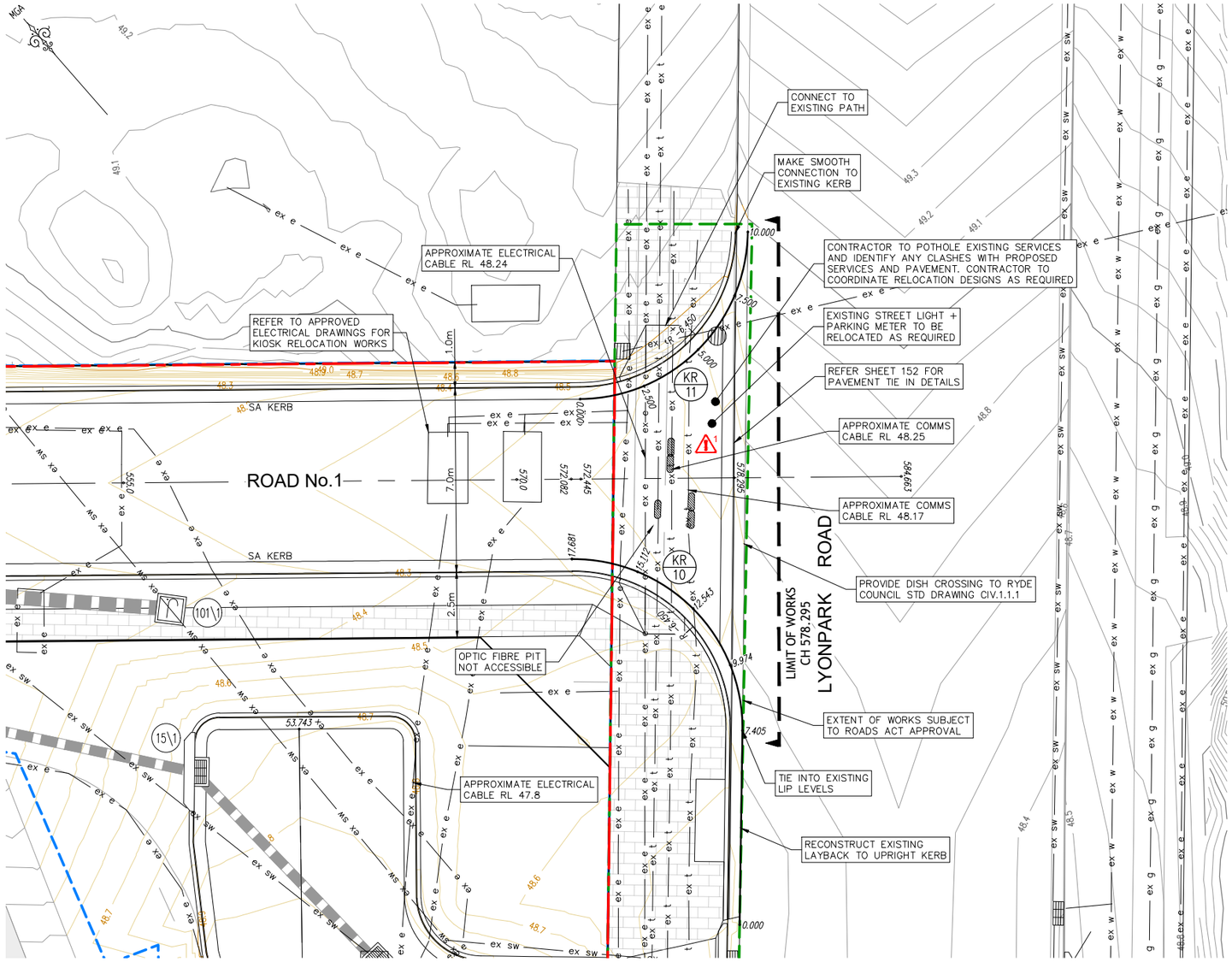

INTERSECTION PLAN

SCALE 1:100

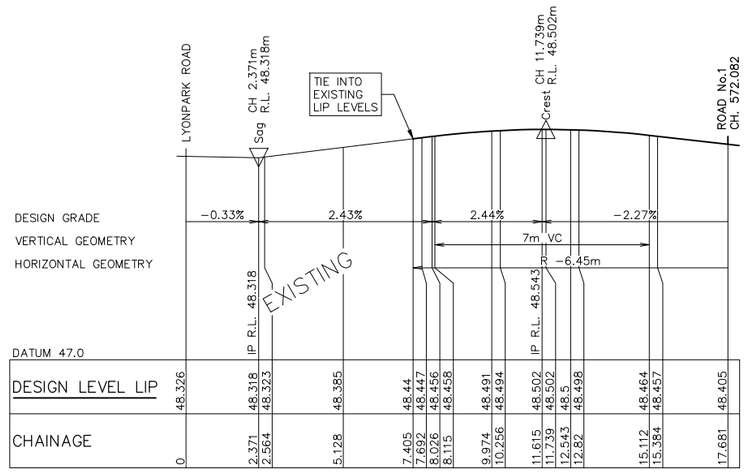

LONGITUDINAL SECTION KR10

HORIZONTAL SCALE 1:100
VERTICAL SCALE 1:20

These plans are referred to in certificate no. **16746** approved by:
Eric Hausfeld
Registered Certifier
Registration No: BDC 2416
Categories: Certifier – Subdivision, Certifier – Strata, Certifier – Stormwater, Certifier – Road & Drainage, Certifier – Hydraulic (stormwater)
Land Development Certificates
www.LDC.com.au

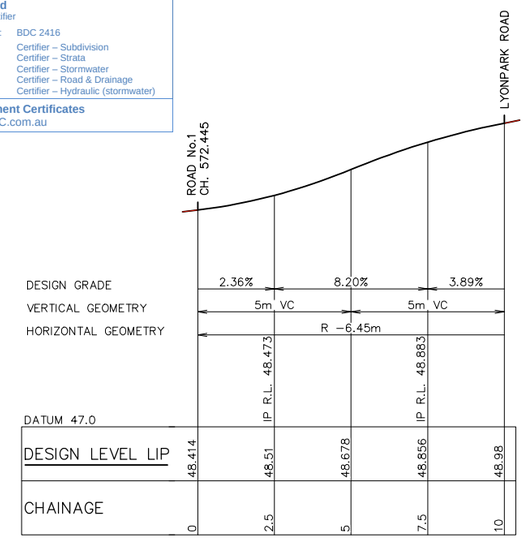

LONGITUDINAL SECTION KR11

HORIZONTAL SCALE 1:100
VERTICAL SCALE 1:20

LEGEND

- WORKS SUBJECT TO ROADS ACT APPROVAL
- LIMIT OF WORKS BOUNDARY
- PROPOSED LOT BOUNDARY
- EXISTING LOT BOUNDARY
- MAJOR CONTOURS
- MINOR CONTOURS
- PROPOSED KERB
- EXISTING KERB
- EXTENTS OF BATTER
- PROPOSED FOOTPATH
- PROPOSED STORMWATER
- ex sw — EXISTING STORMWATER
- ex w — EXISTING WATER
- ex t — EXISTING TELSTRA
- ex e — EXISTING ELECTRICITY
- ex g — EXISTING GAS
- PROPOSED SW PIT
- PROPOSED LINTEL
- PROPOSED HEADWALL
- 1\1 PIT LABEL

CONTOUR INTERVAL = 0.1m

GENERAL NOTES: –

1. FOR TYPICAL ROAD CROSS SECTIONS, KERB PROFILES REFER SHEET 201 AND PAVEMENT DETAILS REFER TO SHEET 151.
2. SETOUT INFORMATION IS TO BE VERIFIED BY THE CONTRACTOR AGAINST THE PLAN VIEW, LONGITUDINAL SECTIONS AND ELECTRONIC 12D DATA BEFORE BEING USED. IF THERE IS A DISCREPANCY THE SUPERINTENDENT IS TO BE NOTIFIED AND DIRECTION TO BE PROVIDED IN WRITING BEFORE PROCEEDING.
3. REFER TO SHEET 901 FOR COMBINED SERVICES PLAN.
4. REFER DRAWINGS PREPARED BY R.A.R.I. FOR SEWER AND WATER DETAILS.

KR10 – SETOUT TABLE

PT	CHAINAGE	EASTING	NORTHING	BEARING	RAD/SPIRAL	A.LENGTH	DEFL.ANGLE
IP 1	0.000	325886.055	6260223.181	42°01'48.63"			
TC	7.405	325891.013	6260228.681	42°01'48.63"			
IP 2	12.543	325895.429	6260233.580		R = −6.450	10.276	91°16'52.57"
IP 3	17.681	325890.432	6260237.886	310°44'56.06"			

KR11 – SETOUT TABLE

PT	CHAINAGE	EASTING	NORTHING	BEARING	RAD/SPIRAL	A.LENGTH	DEFL.ANGLE
IP 1	0.000	325894.689	6260242.270	130°44'56.06"			
IP 2	5.000	325899.477	6260238.145		R = −6.450	10.000	88°49'47.99"
IP 3	10.000	325903.699	6260242.847	41°55'08.07"			

CAUTION:

1. IT IS THE RESPONSIBILITY OF THE CIVIL WORKS CONTRACTOR TO DETERMINE THE LOCATION & LEVEL OF EXISTING SERVICES USING NON DESTRUCTIVE METHODS PRIOR TO COMMENCING WORKS ON SITE.

IDENTIFIED RISK/HAZARD

1. CONTRACTOR IS TO CONFIRM LEVELS AND LOCATION OF EXISTING SERVICES PRIOR TO CONSTRUCTION

DIAL 1100 BEFORE YOU DIG

CONSTRUCTION ISSUE

REV.	DATE	AMENDMENT	DESIGN	DRAWN	CHECKED	APPROVED
1	21.01.22	ISSUED FOR CONSTRUCTION	B.M.	J.J.	B.M.	B.M.

SCALES: A1 1:100 (0, 2.5, 5.0m) A3 1:200; A1 1:20 (0, 0.5, 1.0m) A3 1:40

DESIGN FILE S:\300001\DESIGN\12D\STAGE 2 CC\DESIGN FILE.project

ALL DIMENSIONS ARE IN METRES. DO NOT SCALE

adw Johnson
Central Coast
5 Pioneer Avenue,
P.O. Box 3717,
Tuggerah N.S.W. 2259
Phone: (02) 4305 4300
Fax: (02) 4305 4399
email: coast@adwjohnson.com.au
www.adwjohnson.com.au
ABN 62 129 445 398

CLIENT: FRASERS PROPERTY

PROPERTY DESCRIPTION: LOT 100 D.P.1262209 & LOT 1 D.P.859537, EPPING ROAD & LYONPARK ROAD, MACQUARIE PARK, SSDA 8903

SURVEYED: ADW Johnson | DATUM: GDA94 M.G.A. ZONE 56 A.H.D.

PROJECT: PROPOSED SUBDIVISION

PLAN TITLE: INTERSECTION DETAILS, KERB RETURNS KR10 & KR11

PROJECT No.	DISCIPLINE	NUMBER	REV.
300001(2) –	ENG –	303	1

Plotted By: Ben Myles Plot Date: 21/01/22 2:29:55PM Cad File: S:\300001\DRAWINGS\ENGINEERING\CIVIL\STAGE 2 CC ENG\300001(2)-ENG-303.DWG

100mm AT FULL SIZE

This plan includes coloured information. If you have a black and white copy you do not have all of the information. This note is coloured RED.

300001(2)-ENG-310

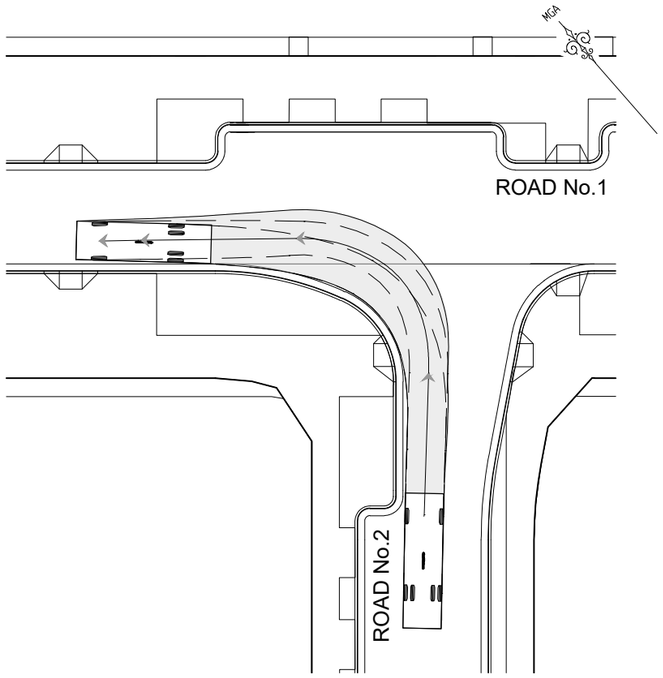

ROAD No.1 & 2 INTERSECTION
LEFT OUT
SCALE 1:200

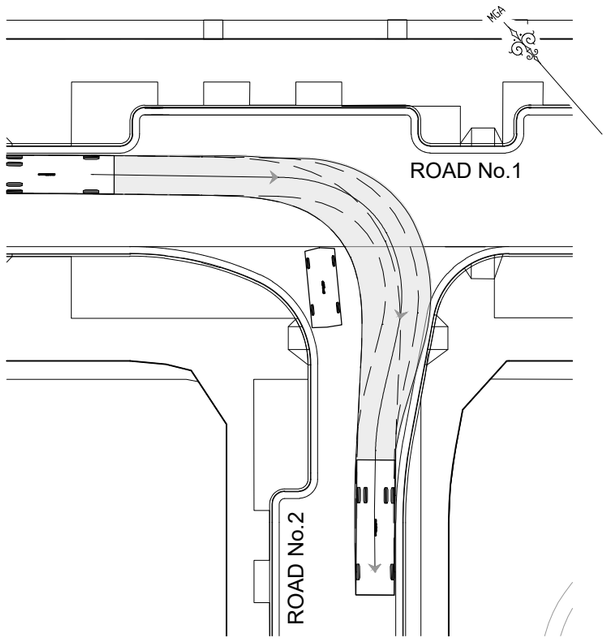

ROAD No.1 & 2 INTERSECTION
RIGHT IN
SCALE 1:200

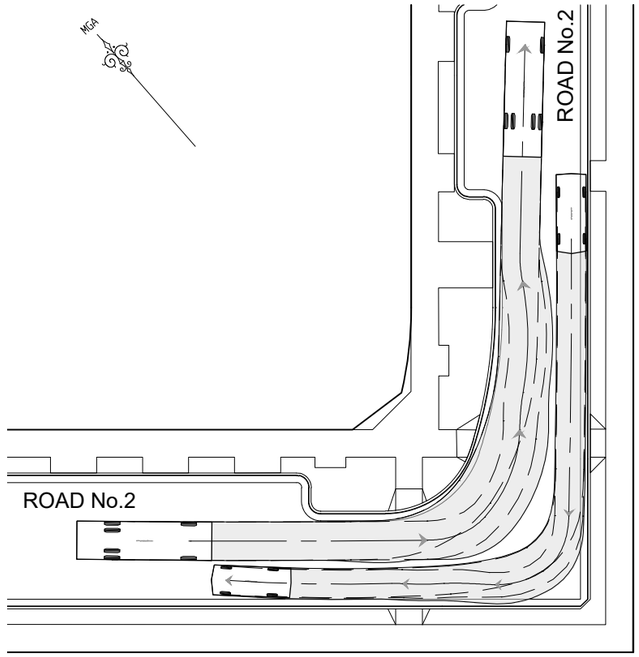

ROAD No.2 BEND – RIGHT & LEFT TURN
SCALE 1:200

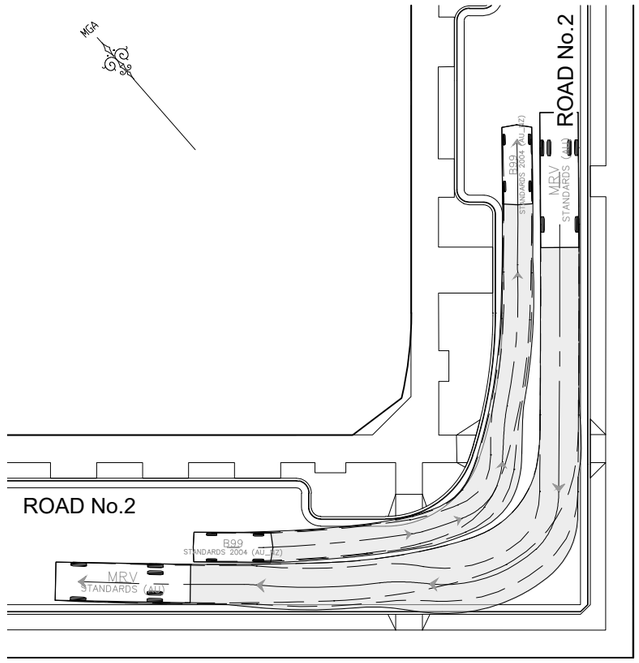

ROAD No.2 BEND – RIGHT & LEFT TURN
SCALE 1:200

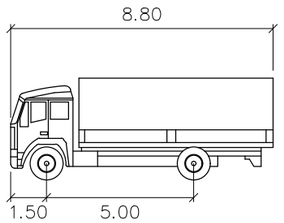

MRV

	meters
Width	: 2.50
Track	: 2.50
Lock to Lock Time	: 6.0
Steering Angle	: 34.0

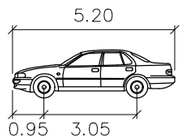

ADWJ B99

	meters
Width	: 1.94
Track	: 1.84
Lock to Lock Time	: 6.0
Steering Angle	: 37.2

These plans are referred to in certificate no. **16746** approved by:

Eric Hausfeld
Registered Certifier

Registration No: BDC 2416
Categories: Certifier – Subdivision
Certifier – Strata
Certifier – Stormwater
Certifier – Road & Drainage
Certifier – Hydraulic (stormwater)

Land Development Certificates
www.LDC.com.au

DIAL 1100 BEFORE YOU DIG

CONSTRUCTION ISSUE

REV.	DATE	AMENDMENT	DESIGN	DRAWN	CHECKED	APPROVED
1	21.01.22	ISSUED FOR CONSTRUCTION	B.M.	J.J.	B.M.	B.M.

SCALES: A1 1:200 — 0 5.0 10.0m — A3 1:400

DESIGN FILE S:\300001\DESIGN\12D\STAGE 2 CC\DESIGN FILE.project

ALL DIMENSIONS ARE IN METRES. DO NOT SCALE

adw Johnson
Central Coast
5 Pioneer Avenue,
P.O. Box 3717,
Tuggerah N.S.W. 2259
Phone: (02) 4305 4300
Fax: (02) 4305 4399
email: coast@adwjohnson.com.au
www.adwjohnson.com.au
ABN 62 129 445 398

CLIENT: FRASERS PROPERTY

PROPERTY DESCRIPTION
LOT 100 D.P.1262209 & LOT 1 D.P.859537
EPPING ROAD & LYONPARK ROAD,
MACQUARIE PARK
SSDA 8903

SURVEYED: ADW Johnson
DATUM: GDA94 M.G.A. ZONE 56 A.H.D.

PROJECT: PROPOSED SUBDIVISION

PLAN TITLE: MRV TURNING PATHS DETAIL PLANS

PROJECT No.	DISCIPLINE	NUMBER	REV.
300001(2) –	ENG –	310	1

Plotted By: Ben Myles Plot Date: 21/01/22 2:29:58PM Cad File: S:\300001\DRAWINGS\ENGINEERING\CIVIL\STAGE 2 CC ENG\300001(2)-ENG-310.DWG

100mm AT FULL SIZE

This plan includes coloured information. If you have a black and white copy you do not have all of the information. This note is coloured RED.

300001(2)-ENG-351

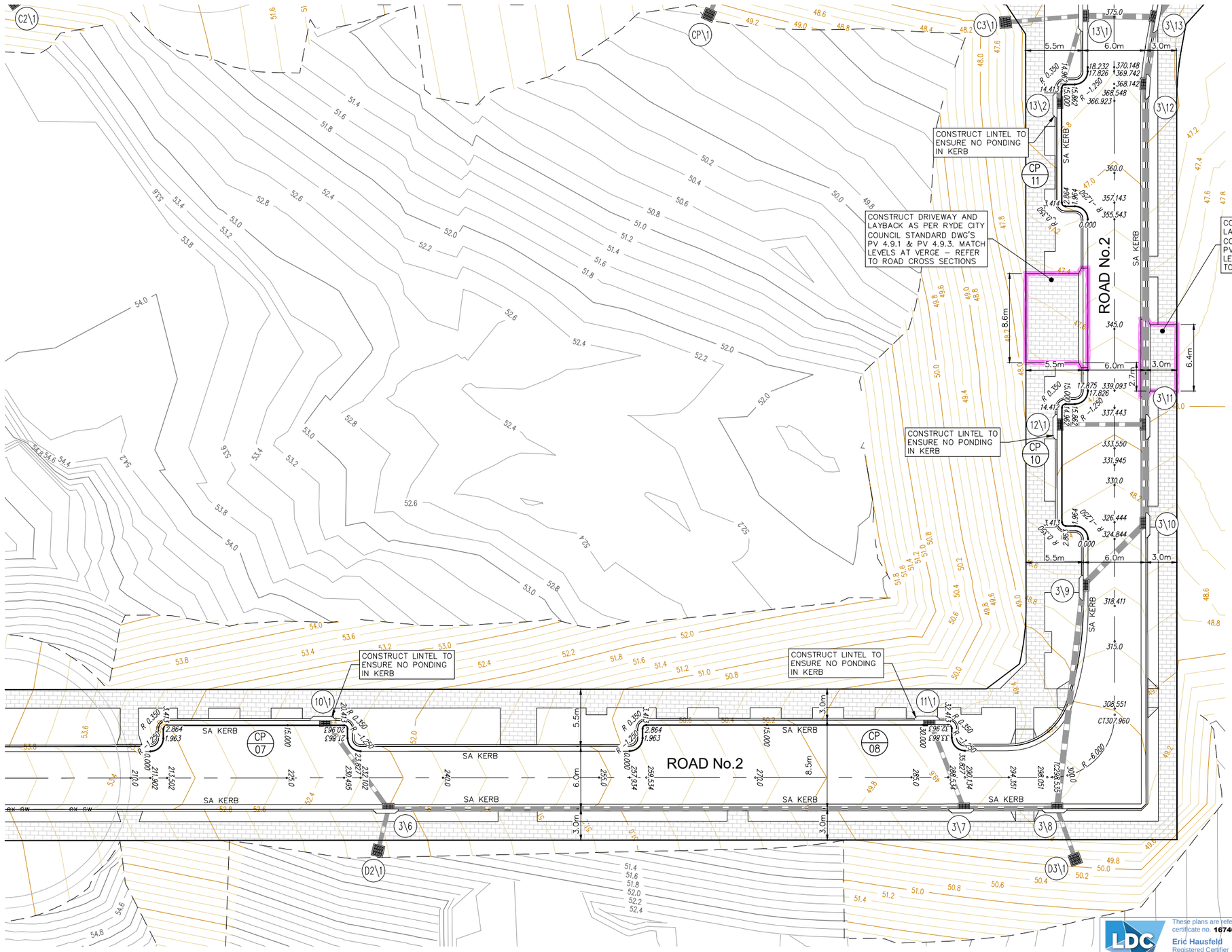

CARPARK PLAN – CP07, CP08, CP10 & CP11

SCALE 1:200

LEGEND

- PROPOSED LOT BOUNDARY
- EXISTING LOT BOUNDARY
- MAJOR CONTOURS
- MINOR CONTOURS
- PROPOSED KERB
- EXISTING KERB
- PROPOSED DRIVEWAY
- EXTENTS OF BATTER
- PROPOSED FOOTPATH
- PROPOSED STORMWATER
- EXISTING STORMWATER
- PROPOSED SW PIT
- PROPOSED LINTEL
- PROPOSED HEADWALL
- PIT LABEL

CONTOUR INTERVAL = 0.2m

CARPARK CP07 – SETOUT TABLE

PT	CHAINAGE	EASTING	NORTHING	BEARING	RAD/SPIRAL	A.LENGTH	DEFL.ANGLE
IP 1	0.000	325572.594	6260383.727	131°10'57.97"			
IP 2	0.982	325573.535	6260382.904		R = –1.250	1.963	89°59'55.10"
CT	1.963	325574.358	6260383.845	41°11'02.86"			
TC	2.864	325574.950	6260384.522	41°11'02.86"			
IP 3	3.138	325575.181	6260384.786		R = 0.350	0.550	89°59'55.10"
CT	3.413	325575.444	6260384.555	131°10'57.97"			
TC	20.413	325588.239	6260373.361	131°10'57.97"			
IP 4	20.688	325588.502	6260373.131		R = 0.350	0.550	90°00'07.05"
CT	20.963	325588.272	6260372.867	221°11'05.02"			
TC	21.863	325587.679	6260372.190	221°11'05.02"			
IP 5	22.845	325586.856	6260371.249		R = –1.250	1.964	90°00'07.05"
IP 6	23.827	325587.797	6260370.426	131°10'57.97"			

CARPARK CP08 – SETOUT TABLE

PT	CHAINAGE	EASTING	NORTHING	BEARING	RAD/SPIRAL	A.LENGTH	DEFL.ANGLE
IP 1	0.000	325607.238	6260353.417	131°10'57.97"			
IP 2	0.982	325608.179	6260352.594		R = –1.250	1.963	89°59'55.10"
CT	1.963	325609.002	6260353.535	41°11'02.86"			
TC	2.864	325609.594	6260354.212	41°11'02.86"			
IP 3	3.138	325609.825	6260354.476		R = 0.350	0.550	89°59'55.10"
CT	3.413	325610.088	6260354.245	131°10'57.97"			
TC	32.413	325631.914	6260335.150	131°10'57.97"			
IP 4	32.688	325632.177	6260334.919		R = 0.350	0.550	89°59'49.81"
CT	32.963	325631.947	6260334.656	221°10'47.77"			
TC	33.863	325631.354	6260333.978	221°10'47.77"			
IP 5	34.845	325630.531	6260333.038		R = –1.250	1.963	89°59'49.81"
IP 6	35.827	325631.472	6260332.215	131°10'57.97"			

CARPARK CP10 – SETOUT TABLE

PT	CHAINAGE	EASTING	NORTHING	BEARING	RAD/SPIRAL	A.LENGTH	DEFL.ANGLE
IP 1	0.000	325653.781	6260339.715	41°10'58.51"			
IP 2	0.982	325654.604	6260340.655		R = –1.250	1.964	90°00'10.74"
CT	1.964	325653.663	6260341.478	311°10'47.77"			
TC	2.863	325652.986	6260342.071	311°10'47.77"			
IP 3	3.138	325652.722	6260342.301		R = 0.350	0.550	90°00'10.73"
CT	3.413	325652.953	6260342.565	41°10'58.50"			
TC	14.412	325660.195	6260350.843	41°10'58.50"			
IP 4	14.687	325660.426	6260351.106		R = 0.350	0.550	90°00'21.61"
CT	14.962	325660.689	6260350.876	131°11'20.11"			
TC	15.862	325661.366	6260350.283	131°11'20.11"			
IP 5	16.844	325662.307	6260349.460		R = –1.250	1.964	90°00'21.60"
CT	17.826	325663.130	6260350.401	41°10'58.51"			
IP 6	17.875	325663.163	6260350.438	41°10'58.51"			

CARPARK CP11 – SETOUT TABLE

PT	CHAINAGE	EASTING	NORTHING	BEARING	RAD/SPIRAL	A.LENGTH	DEFL.ANGLE
IP 1	0.000	325673.995	6260362.819	41°10'56.86"			
IP 2	0.000	325673.995	6260362.819				
IP 3	0.982	325674.818	6260363.760		R = –1.250	1.964	90°00'09.07"
CT	1.964	325673.877	6260364.583	311°10'47.77"			
TC	2.864	325673.200	6260365.176	311°10'47.77"			
IP 4	3.139	325672.937	6260365.406		R = 0.350	0.550	90°00'10.74"
CT	3.414	325673.167	6260365.669	41°10'58.51"			
TC	14.413	325680.410	6260373.947	41°10'58.51"			
IP 5	14.688	325680.640	6260374.211		R = 0.350	0.550	90°00'21.60"
CT	14.962	325680.903	6260373.980	131°11'20.11"			
TC	15.862	325681.581	6260373.388	131°11'20.11"			
IP 6	16.844	325682.521	6260372.564		R = –1.250	1.964	90°00'21.60"
CT	17.826	325683.345	6260373.505	41°10'58.51"			
IP 7	18.232	325683.612	6260373.811	41°10'58.51"			

These plans are referred to in certificate no. **16746** approved by:

Eric Hausfeld
Registered Certifier

Registration No: BDC 2416
Categories: Certifier – Subdivision
Certifier – Strata
Certifier – Stormwater
Certifier – Road & Drainage
Certifier – Hydraulic (stormwater)

Land Development Certificates
www.LDC.com.au

CAUTION:

1. IT IS THE RESPONSIBILITY OF THE CIVIL WORKS CONTRACTOR TO DETERMINE THE LOCATION & LEVEL OF EXISTING SERVICES USING NON DESTRUCTIVE METHODS PRIOR TO COMMENCING WORKS ON SITE.

DIAL 1100 BEFORE YOU DIG

CONSTRUCTION ISSUE

REV.	DATE	AMENDMENT	DESIGN	DRAWN	CHECKED	APPROVED
1	21.01.22	ISSUED FOR CONSTRUCTION	B.M.	J.J.	B.M.	B.M.

SCALES: A1 1:200 — 0 5.0 10.0m — A3 1:400

adw Johnson
Central Coast
5 Pioneer Avenue,
P.O. Box 3717,
Tuggerah N.S.W. 2259
Phone: (02) 4305 4300
Fax: (02) 4305 4399
email: coast@adwjohnson.com.au
www.adwjohnson.com.au
ABN 62 129 445 398

CLIENT: FRASERS PROPERTY

PROPERTY DESCRIPTION: LOT 100 D.P.1262209 & LOT 1 D.P.859537
EPPING ROAD & LYONPARK ROAD,
MACQUARIE PARK
SSDA 8903

SURVEYED: ADW Johnson
DATUM: GDA94 M.G.A. ZONE 56 A.H.D.

PROJECT: PROPOSED SUBDIVISION

PLAN TITLE: CARPARK DETAIL PLAN
CP07, CP08, CP10 & CP11

PROJECT No.	DISCIPLINE	NUMBER	REV.
300001(2) –	ENG –	351	1

DESIGN FILE S:\300001\DESIGN\12D\STAGE 2 CC\DESIGN FILE.project

ALL DIMENSIONS ARE IN METRES. DO NOT SCALE

Plotted By: Ben Myles Plot Date: 21/01/22 2:30:05PM Cad File: S:\300001\DRAWINGS\ENGINEERING\CIVIL\STAGE 2 CC ENG\300001(2)-ENG-351.DWG

100mm AT FULL SIZE

This plan includes coloured information. If you have a black and white copy you do not have all of the information. This note is coloured RED.

300001(2)-ENG-352

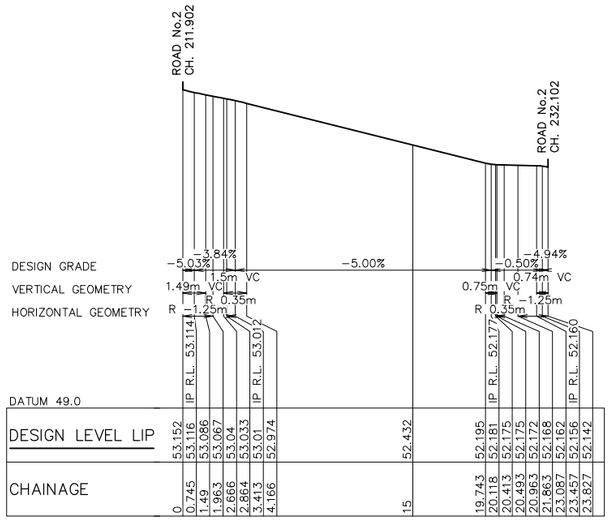

LONGITUDINAL SECTION ENG CP07

HORIZONTAL SCALE 1:200
VERTICAL SCALE 1:40

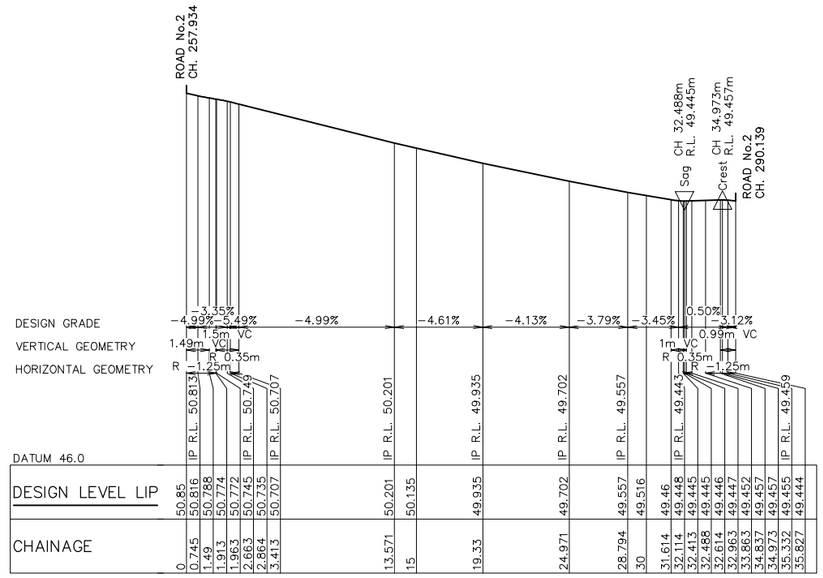

LONGITUDINAL SECTION ENG CP08

HORIZONTAL SCALE 1:200
VERTICAL SCALE 1:40

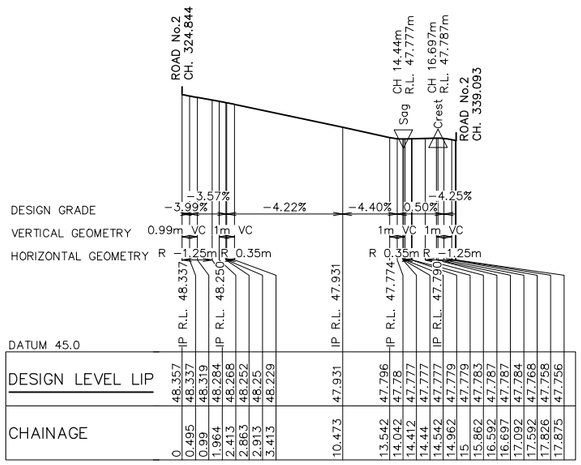

LONGITUDINAL SECTION ENG CP10

HORIZONTAL SCALE 1:200
VERTICAL SCALE 1:40

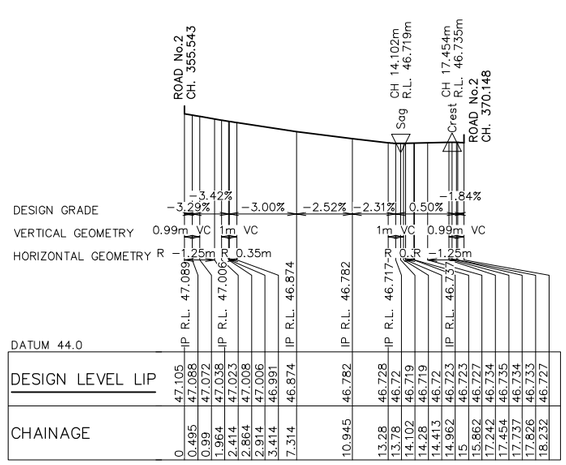

LONGITUDINAL SECTION ENG CP11

HORIZONTAL SCALE 1:200
VERTICAL SCALE 1:40

These plans are referred to in certificate no. **16746** approved by:

Eric Hausfeld
Registered Certifier

Registration No: BDC 2416
Categories: Certifier – Subdivision, Certifier – Strata, Certifier – Stormwater, Certifier – Road & Drainage, Certifier – Hydraulic (stormwater)

Land Development Certificates
www.LDC.com.au

DIAL 1100 BEFORE YOU DIG

CONSTRUCTION ISSUE

REV.	DATE	AMENDMENT	DESIGN	DRAWN	CHECKED	APPROVED
1	21.01.22	ISSUED FOR CONSTRUCTION	B.M.	J.J.	B.M.	B.M.

SCALES: A1 1:200 (0, 5.0, 10.0m) A3 1:400; A1 1:40 (0, 1.0, 2.0m) A3 1:80

DESIGN FILE S:\300001\DESIGN\12D\STAGE 2 CC\DESIGN FILE.project

ALL DIMENSIONS ARE IN METRES. DO NOT SCALE

adw Johnson
Central Coast
5 Pioneer Avenue,
P.O. Box 3717,
Tuggerah N.S.W. 2259
Phone: (02) 4305 4300
Fax: (02) 4305 4399
email: coast@adwjohnson.com.au
www.adwjohnson.com.au
ABN 62 129 445 398

CLIENT: FRASERS PROPERTY

PROPERTY DESCRIPTION: LOT 100 D.P.1262209 & LOT 1 D.P.859537, EPPING ROAD & LYONPARK ROAD, MACQUARIE PARK, SSDA 8903

SURVEYED: ADW Johnson
DATUM: GDA94 M.G.A. ZONE 56 A.H.D.

PROJECT: PROPOSED SUBDIVISION

PLAN TITLE: CARPARK LONGITUDINAL SECTIONS CP07, CP08, CP10 & CP11

PROJECT No.	DISCIPLINE	NUMBER	REV.
300001(2)	ENG	352	1

Plotted By: Ben Myles Plot Date: 21/01/22 2:30:08PM Cad File: S:\300001\DRAWINGS\ENGINEERING\CIVIL\STAGE 2 CC ENG\300001(2)-ENG-352.DWG

100mm AT FULL SIZE

This plan includes coloured information. If you have a black and white copy you do not have all of the information. This note is coloured RED.

300001(2)-ENG-353

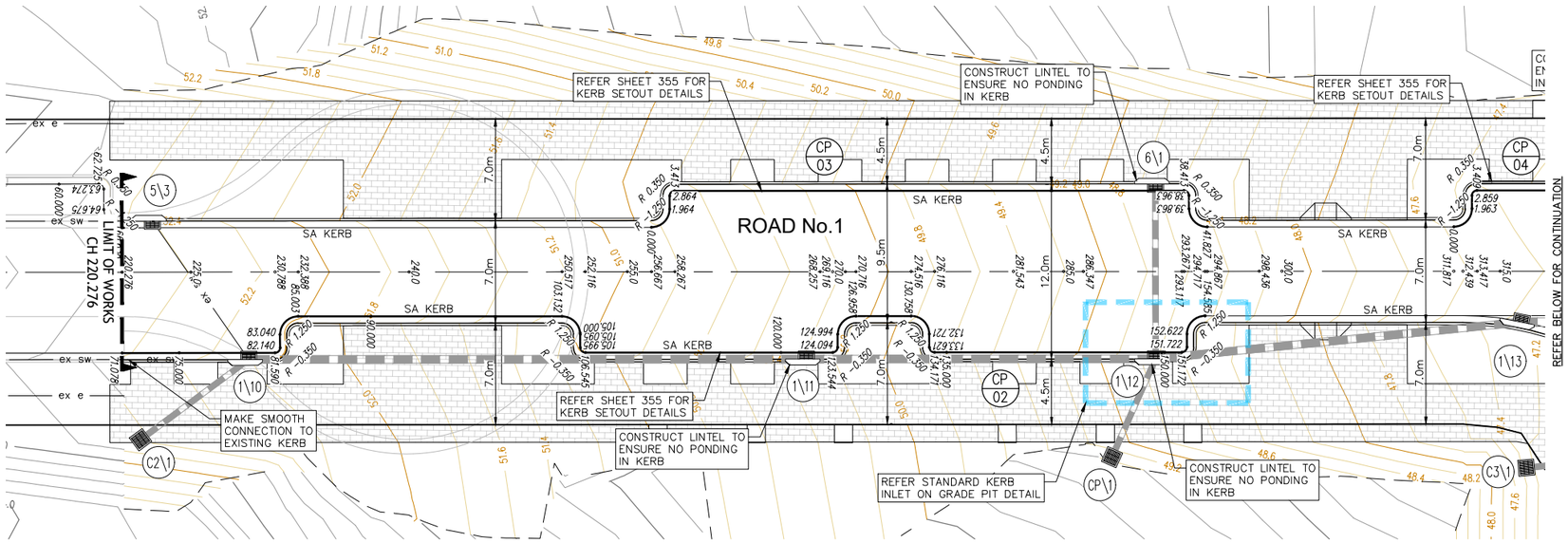

CARPARK PLAN – CP02, CP03 & CP04

SCALE 1:200

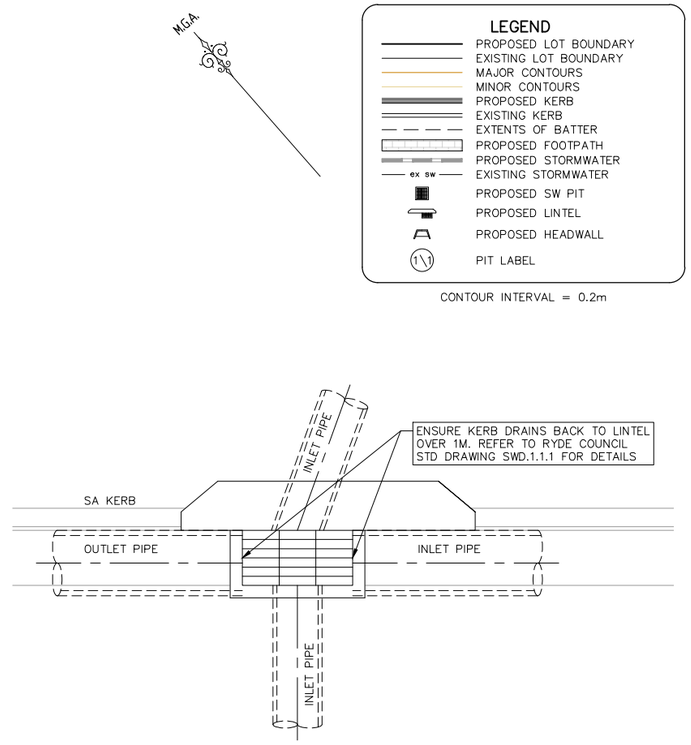

STANDARD KERB INLET ON GRADE PIT DETAIL

SCALE 1:25

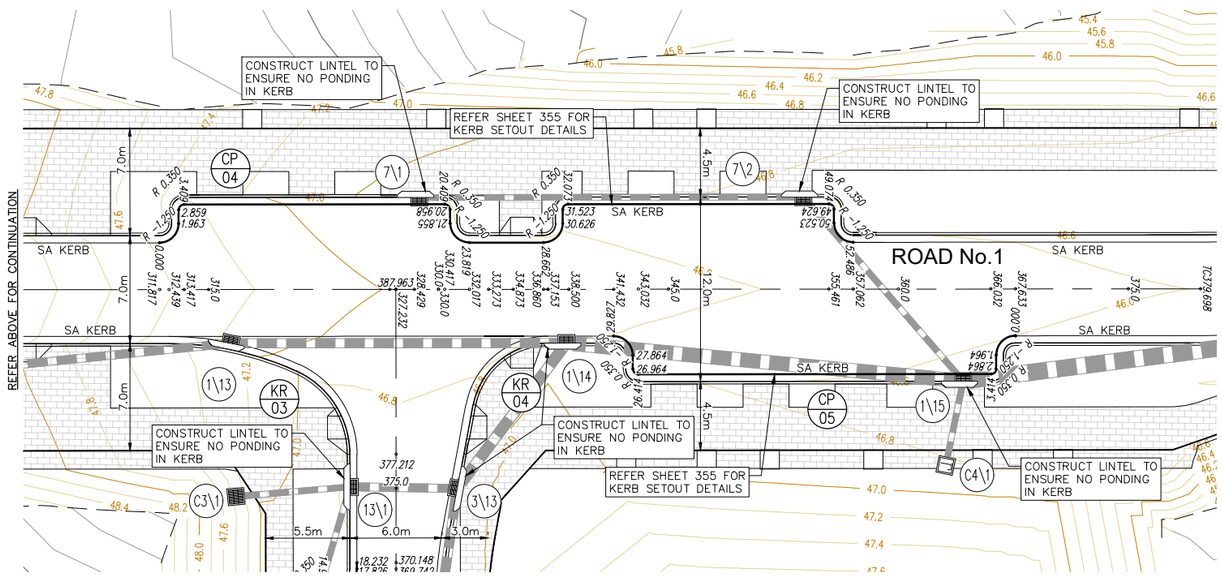

CARPARK PLAN – CP04 & CP05

SCALE 1:200

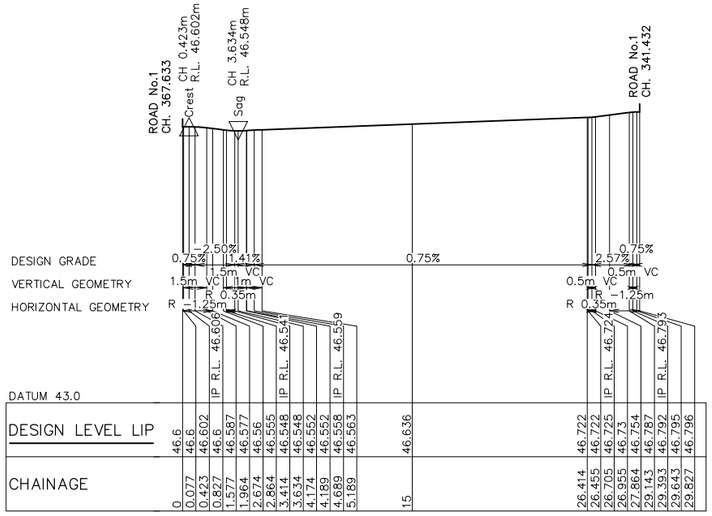

LONGITUDINAL SECTION ENG CP05

HORIZONTAL SCALE 1:200
VERTICAL SCALE 1:40

CAUTION:

1. IT IS THE RESPONSIBILITY OF THE CIVIL WORKS CONTRACTOR TO DETERMINE THE LOCATION & LEVEL OF EXISTING SERVICES USING NON DESTRUCTIVE METHODS PRIOR TO COMMENCING WORKS ON SITE.

DIAL 1100 BEFORE YOU DIG

These plans are referred to in certificate no. **16746** approved by:

Eric Hausfeld
Registered Certifier

Registration No: BDC 2416
Categories: Certifier – Subdivision; Certifier – Strata; Certifier – Stormwater; Certifier – Road & Drainage; Certifier – Hydraulic (stormwater)

Land Development Certificates
www.LDC.com.au

CONSTRUCTION ISSUE

REV.	DATE	AMENDMENT	DESIGN	DRAWN	CHECKED	APPROVED
1	21.01.22	ISSUED FOR CONSTRUCTION	B.M.	J.J.	B.M.	B.M.

SCALES: A1 1:200 / A3 1:400; A1 1:40 / A3 1:80; A1 1:25 / A3 1:50

ALL DIMENSIONS ARE IN METRES. DO NOT SCALE

adw Johnson
Central Coast
5 Pioneer Avenue,
P.O. Box 3717,
Tuggerah N.S.W. 2259
Phone: (02) 4305 4300
Fax: (02) 4305 4399
email: coast@adwjohnson.com.au
www.adwjohnson.com.au
ABN 62 129 445 398

CLIENT: FRASERS PROPERTY

PROPERTY DESCRIPTION: LOT 100 D.P.1262209 & LOT 1 D.P.859537, EPPING ROAD & LYONPARK ROAD, MACQUARIE PARK, SSDA 8903

SURVEYED: ADW Johnson
DATUM: GDA94 M.G.A. ZONE 56 A.H.D.

PROJECT: PROPOSED SUBDIVISION
PLAN TITLE: CARPARK DETAIL PLAN CP02, CP03, CP04 & CP05

PROJECT No.	DISCIPLINE	NUMBER	REV.
300001(2) –	ENG –	353	1

DESIGN FILE S:\300001\DESIGN\12D\STAGE 2 CC\DESIGN FILE.project

Plotted By: Ben Myles Plot Date: 21/01/22 2:30:16PM Cad File: S:\300001\DRAWINGS\ENGINEERING\CIVIL\STAGE 2 CC ENG\300001(2)-ENG-353.DWG

100mm AT FULL SIZE

This plan includes coloured information. If you have a black and white copy you do not have all of the information. This note is coloured RED.

300001(2)-ENG-354

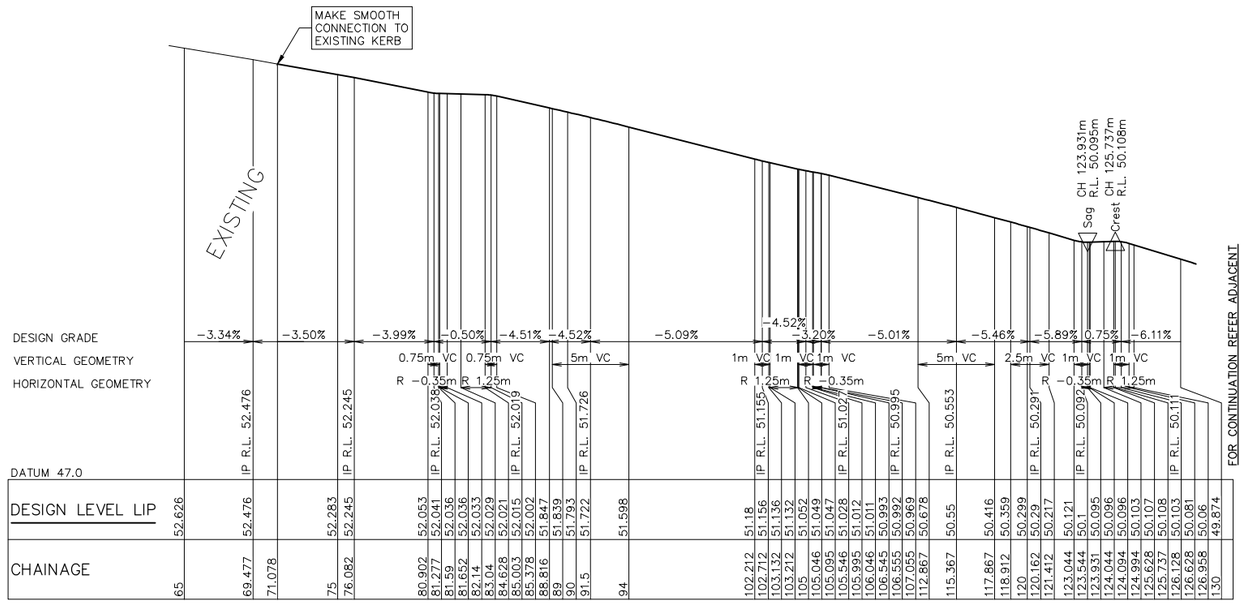

LONGITUDINAL SECTION ENG CP02

HORIZONTAL SCALE 1:200
VERTICAL SCALE 1:40

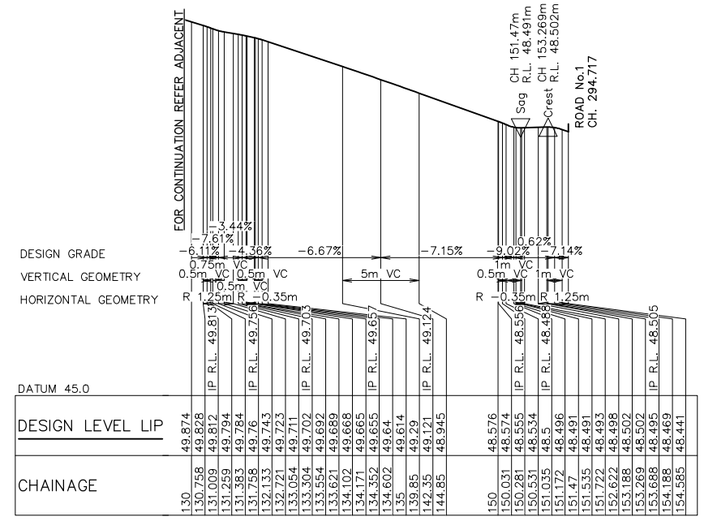

LONGITUDINAL SECTION ENG CP02 (CONTINUED)

HORIZONTAL SCALE 1:200
VERTICAL SCALE 1:40

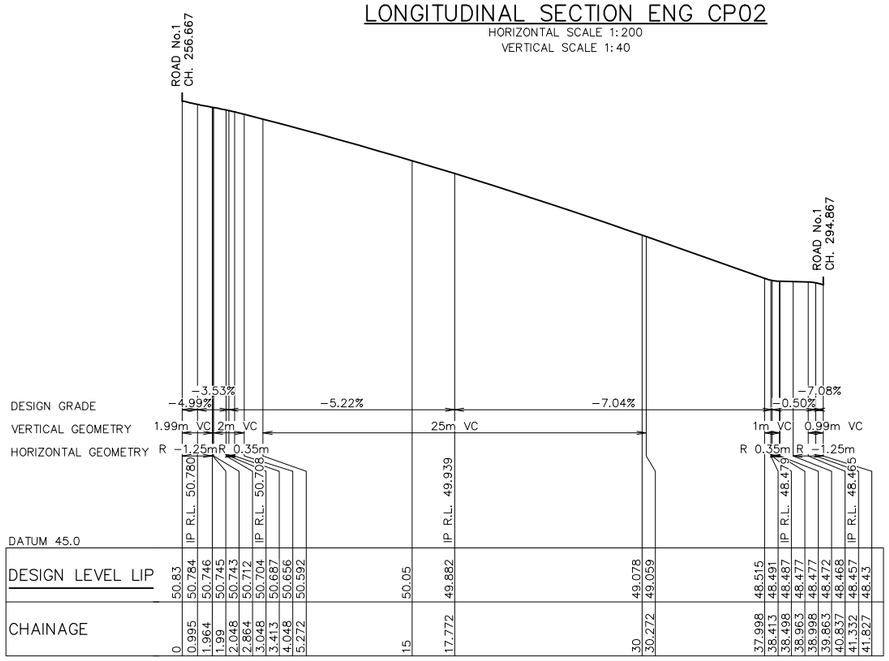

LONGITUDINAL SECTION ENG CP03

HORIZONTAL SCALE 1:200
VERTICAL SCALE 1:40

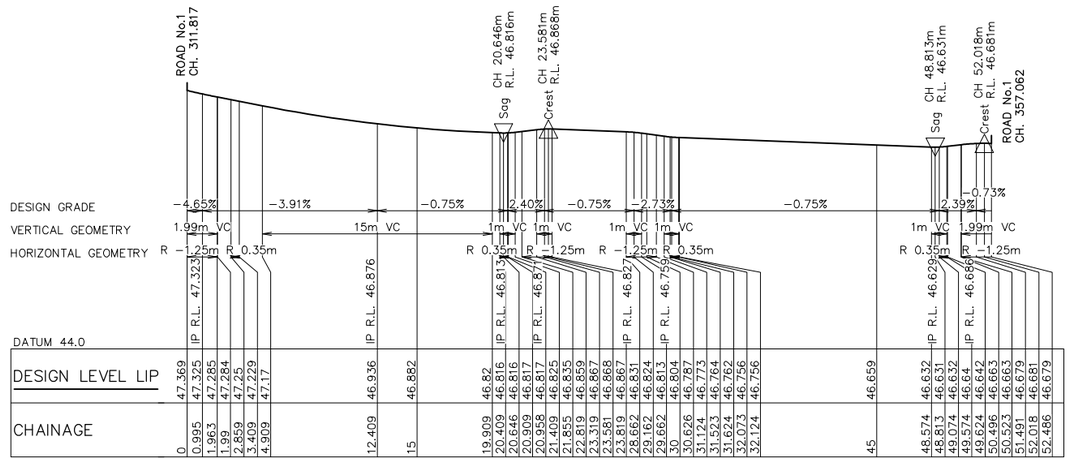

LONGITUDINAL SECTION ENG CP04

HORIZONTAL SCALE 1:200
VERTICAL SCALE 1:40

These plans are referred to in certificate no. **16746** approved by:
Eric Hausfeld
Registered Certifier
Registration No: BDC 2416
Categories: Certifier – Subdivision; Certifier – Strata; Certifier – Stormwater; Certifier – Road & Drainage; Certifier – Hydraulic (stormwater)
Land Development Certificates
www.LDC.com.au

DIAL 1100 BEFORE YOU DIG

CONSTRUCTION ISSUE

REV.	DATE	AMENDMENT	DESIGN	DRAWN	CHECKED	APPROVED
1	21.01.22	ISSUED FOR CONSTRUCTION	B.M.	J.J.	B.M.	B.M.

SCALES: A1 1:200 (0, 5.0, 10.0m) A3 1:400; A1 1:40 (0, 1.0, 2.0m) A3 1:80

ALL DIMENSIONS ARE IN METRES. DO NOT SCALE

adw Johnson
Central Coast
5 Pioneer Avenue,
P.O. Box 3717,
Tuggerah N.S.W. 2259
Phone: (02) 4305 4300
Fax: (02) 4305 4399
email: coast@adwjohnson.com.au
www.adwjohnson.com.au
ABN 62 129 445 398

CLIENT: FRASERS PROPERTY

PROPERTY DESCRIPTION: LOT 100 D.P.1262209 & LOT 1 D.P.859537
EPPING ROAD & LYONPARK ROAD,
MACQUARIE PARK
SSDA 8903

SURVEYED: ADW Johnson
DATUM: GDA94 M.G.A. ZONE 56 A.H.D.

PROJECT: PROPOSED SUBDIVISION

PLAN TITLE: CARPARK LONGITUDINAL SECTIONS CP02, CP03 & CP04

PROJECT No.	DISCIPLINE	NUMBER	REV.
300001(2)	ENG	354	1

DESIGN FILE S:\300001\DESIGN\12D\STAGE 2 CC\DESIGN FILE.project

Plotted By: Ben Myles Plot Date: 21/01/22 2:30:20PM Cad File: S:\300001\DRAWINGS\ENGINEERING\CIVIL\STAGE 2 CC ENG\300001(2)-ENG-354.DWG

100mm AT FULL SIZE

This plan includes coloured information. If you have a black and white copy you do not have all of the information. This note is coloured RED.

300001(2)-ENG-355

CARPARK CP02 – SETOUT TABLE

PT	CHAINAGE	EASTING	NORTHING	BEARING	RAD/SPIRAL	A.LENGTH	DEFL.ANGLE
IP 1	0.000	325568.083	6260494.502	131°10'56.81"			
IP 2	0.000	325568.084	6260494.502				
IP 3	0.981	325569.023	6260493.680		R = 1.250	1.962	89°55'34.71"
CT	1.962	325568.202	6260492.739	221°06'31.58"			
TC	2.864	325567.609	6260492.060	221°06'31.58"			
IP 4	3.139	325567.379	6260491.796		R = −0.350	0.549	89°55'36.38"
CT	3.414	325567.643	6260491.566	131°10'55.20"			
TC	20.411	325580.435	6260480.374	131°10'55.20"			
IP 5	20.685	325580.698	6260480.144		R = −0.350	0.550	89°59'43.67"
CT	20.960	325580.929	6260480.407	41°11'11.52"			
TC	21.860	325581.521	6260481.085	41°11'11.52"			
IP 6	22.842	325582.344	6260482.025		R = 1.250	1.963	89°59'43.78"
CT	23.824	325583.285	6260481.202	131°10'55.31"			
TC	27.624	325586.145	6260478.700	131°10'55.31"			
IP 7	28.606	325587.086	6260477.877		R = 1.250	1.964	90°00'16.22"
CT	29.588	325586.263	6260476.936	221°11'11.52"			
TC	30.488	325585.670	6260476.259	221°11'11.52"			
IP 8	30.762	325585.440	6260475.995		R = −0.350	0.550	90°00'16.22"
CT	31.037	325585.703	6260475.765	131°10'55.31"			
TC	48.050	325598.508	6260464.563	131°10'55.31"			
IP 9	48.325	325598.771	6260464.332		R = −0.350	0.550	89°59'43.78"
CT	48.600	325599.001	6260464.596	41°11'11.52"			
TC	49.500	325599.594	6260465.273	41°11'11.52"			
IP 10	50.482	325600.417	6260466.214		R = 1.250	1.963	89°59'43.78"
CT	51.464	325601.358	6260465.391	131°10'55.31"			
TC	55.164	325604.143	6260462.955	131°10'55.31"			
IP 11	56.145	325605.084	6260462.131		R = 1.250	1.964	90°00'16.22"
CT	57.127	325604.260	6260461.191	221°11'11.52"			
TC	58.027	325603.668	6260460.513	221°11'11.52"			
IP 12	58.302	325603.437	6260460.250		R = −0.350	0.550	90°00'16.27"
CT	58.577	325603.701	6260460.019	131°10'55.25"			
TC	81.590	325621.021	6260444.867	131°10'55.25"			
IP 13	81.865	325621.284	6260444.636		R = −0.350	0.550	89°59'59.94"
CT	82.140	325621.515	6260444.899	41°10'55.31"			
TC	83.040	325622.107	6260445.577	41°10'55.31"			
IP 14	84.021	325622.930	6260446.518		R = 1.250	1.963	90°00'00.00"
CT	85.003	325623.871	6260445.695	131°10'55.31"			
TC	103.132	325637.515	6260433.758	131°10'55.31"			
IP 15	104.114	325638.456	6260432.935		R = 1.250	1.964	90°00'16.22"
CT	105.095	325637.633	6260431.994	221°11'11.52"			
TC	105.995	325637.040	6260431.316	221°11'11.52"			
IP 16	106.270	325636.810	6260431.053		R = −0.350	0.550	90°00'16.22"
CT	106.545	325637.073	6260430.823	131°10'55.31"			
TC	123.544	325649.867	6260419.629	131°10'55.31"			
IP 17	123.819	325650.131	6260419.399		R = −0.350	0.550	89°59'43.79"
CT	124.094	325650.361	6260419.662	41°11'11.52"			
TC	124.994	325650.954	6260420.340	41°11'11.52"			
IP 18	125.976	325651.777	6260421.280		R = 1.250	1.963	89°59'43.78"
CT	126.958	325652.718	6260420.457	131°10'55.31"			
TC	130.758	325655.578	6260417.955	131°10'55.31"			
IP 19	131.740	325656.518	6260417.132		R = 1.250	1.964	90°00'16.22"
CT	132.721	325655.695	6260416.191	221°11'11.52"			
TC	133.621	325655.103	6260415.514	221°11'11.52"			
IP 20	133.896	325654.872	6260415.251		R = −0.350	0.550	90°00'16.22"
CT	134.171	325655.136	6260415.020	131°10'55.31"			
TC	151.172	325667.931	6260403.826	131°10'55.31"			
IP 21	151.447	325668.194	6260403.595		R = −0.350	0.550	89°59'43.78"
CT	151.722	325668.425	6260403.859	41°11'11.52"			
TC	152.622	325669.017	6260404.536	41°11'11.52"			
IP 22	153.603	325669.840	6260405.477		R = 1.250	1.963	89°59'43.78"
IP 23	154.585	325670.781	6260404.654				
IP 24	154.585	325670.781	6260404.654	131°10'55.03"			

CARPARK CP03 – SETOUT TABLE

PT	CHAINAGE	EASTING	NORTHING	BEARING	RAD/SPIRAL	A.LENGTH	DEFL.ANGLE
IP 1	0.000	325646.160	6260434.299	131°10'55.36"			
IP 2	0.982	325647.101	6260433.476		R = −1.250	1.964	90°00'10.46"
CT	1.964	325647.924	6260434.417	41°10'44.90"			
TC	2.864	325648.517	6260435.094	41°10'44.90"			
IP 3	3.138	325648.747	6260435.357		R = 0.350	0.550	90°00'10.35"
CT	3.413	325649.011	6260435.127	131°10'55.25"			
TC	38.413	325675.353	6260412.081	131°10'55.25"			
IP 4	38.688	325675.616	6260411.851		R = 0.350	0.550	89°59'55.40"
CT	38.963	325675.386	6260411.587	221°10'50.65"			
TC	39.863	325674.793	6260410.910	221°10'50.64"			
IP 5	40.845	325673.970	6260409.969		R = −1.250	1.963	89°59'42.87"
IP 6	41.827	325674.911	6260409.146	131°11'07.78"			

CARPARK CP04 – SETOUT TABLE

PT	CHAINAGE	EASTING	NORTHING	BEARING	RAD/SPIRAL	A.LENGTH	DEFL.ANGLE
IP 1	0.000	325684.968	6260400.347	131°10'58.44"			
IP 2	0.000	325684.968	6260400.347				
IP 3	0.982	325685.908	6260399.524		R = −1.250	1.963	89°59'58.31"
CT	1.963	325686.731	6260400.465	41°10'57.00"			
TC	2.859	325687.321	6260401.139	41°10'57.00"			
IP 4	3.134	325687.552	6260401.402		R = 0.350	0.550	89°59'44.72"
CT	3.409	325687.815	6260401.172	131°10'41.72"			
TC	20.409	325700.610	6260389.979	131°10'41.72"			
IP 5	20.684	325700.874	6260389.749		R = 0.350	0.550	90°00'12.90"
CT	20.958	325700.643	6260389.485	221°10'54.62"			
TC	21.855	325700.053	6260388.810	221°10'54.62"			
IP 6	22.837	325699.230	6260387.870		R = −1.250	1.963	89°59'59.32"
CT	23.818	325700.171	6260387.047	131°10'55.31"			
TC	28.662	325703.816	6260383.857	131°10'55.31"			
IP 7	29.644	325704.757	6260383.034		R = −1.250	1.964	90°01'13.45"
CT	30.626	325705.580	6260383.975	41°09'41.85"			
TC	31.523	325706.170	6260384.650	41°09'41.85"			
IP 8	31.798	325706.401	6260384.914		R = 0.350	0.550	90°00'59.87"
CT	32.072	325706.664	6260384.683	131°10'41.72"			
TC	49.074	325719.461	6260373.489	131°10'41.72"			
IP 9	49.349	325719.724	6260373.259		R = 0.350	0.550	90°00'12.90"
CT	49.624	325719.494	6260372.996	221°10'54.62"			
TC	50.522	325718.902	6260372.320	221°10'54.62"			
IP 10	51.504	325718.079	6260371.379		R = −1.250	1.963	89°59'59.31"
IP 11	52.485	325719.020	6260370.556				
IP 12	52.485	325719.020	6260370.556	131°10'47.07"			

CARPARK CP05 – SETOUT TABLE

PT	CHAINAGE	EASTING	NORTHING	BEARING	RAD/SPIRAL	A.LENGTH	DEFL.ANGLE
IP 1	0.000	325725.659	6260356.642	311°10'55.25"			
IP 2	0.000	325725.659	6260356.642				
IP 3	0.982	325724.718	6260357.465		R = −1.250	1.964	90°00'04.33"
CT	1.964	325723.895	6260356.525	221°10'50.97"			
TC	2.864	325723.302	6260355.847	221°10'50.97"			
IP 4	3.139	325723.072	6260355.584		R = 0.350	0.550	90°00'04.33"
CT	3.414	325722.809	6260355.814	311°10'55.31"			
TC	26.414	325705.498	6260370.959	311°10'55.31"			
IP 5	26.689	325705.235	6260371.189		R = 0.350	0.550	90°00'00.00"
CT	26.964	325705.465	6260371.453	41°10'55.31"			
TC	27.864	325706.058	6260372.130	41°10'55.31"			
IP 6	28.845	325706.881	6260373.071		R = −1.250	1.963	90°00'00.00"
IP 7	29.827	325705.940	6260373.894	311°10'55.31"			

LDC

These plans are referred to in certificate no. **16746** approved by:

Eric Hausfeld
Registered Certifier

Registration No: BDC 2416
Categories: Certifier – Subdivision
Certifier – Strata
Certifier – Stormwater
Certifier – Road & Drainage
Certifier – Hydraulic (stormwater)

Land Development Certificates
www.LDC.com.au

DIAL1100 BEFORE YOU DIG

CONSTRUCTION ISSUE

REV.	DATE	AMENDMENT	DESIGN	DRAWN	CHECKED	APPROVED
1	21.01.22	ISSUED FOR CONSTRUCTION	B.M.	J.J.	B.M.	B.M.

SCALES: NOT TO SCALE

DESIGN FILE S:\300001\DESIGN\12D\STAGE 2 CC\DESIGN FILE.project

ALL DIMENSIONS ARE IN METRES. DO NOT SCALE

adw Johnson
Central Coast
5 Pioneer Avenue,
P.O. Box 3717,
Tuggerah N.S.W. 2259
Phone: (02) 4305 4300
Fax: (02) 4305 4399
email: coast@adwjohnson.com.au
www.adwjohnson.com.au
ABN 62 129 445 398

CLIENT: FRASERS PROPERTY

PROPERTY DESCRIPTION: LOT 100 D.P.1262209 & LOT 1 D.P.859537
EPPING ROAD & LYONPARK ROAD,
MACQUARIE PARK
SSDA 8903

SURVEYED: ADW Johnson
DATUM: GDA94 M.G.A. ZONE 56 A.H.D.

PROJECT: PROPOSED SUBDIVISION

PLAN TITLE: CARPARK SETOUT TABLES
CP02, CP03, CP04 & CP05

PROJECT No.	DISCIPLINE	NUMBER	REV.
300001(2) –	ENG –	355	1

100mm AT FULL SIZE

This plan includes coloured information. If you have a black and white copy you do not have all of the information. This note is coloured RED.

Plotted By: Ben Myles Plot Date: 21/01/22 2:30:23PM Cad File: S:\300001\DRAWINGS\ENGINEERING\CIVIL\STAGE 2 CC ENG\300001(2)-ENG-355.DWG

300001(2)-ENG-361

100mm AT FULL SIZE

This plan includes coloured information. If you have a black and white copy you do not have all of the information. This note is coloured RED.

LEGEND

- LIMIT OF WORKS BOUNDARY
- PROPOSED LOT BOUNDARY
- EXISTING LOT BOUNDARY
- MAJOR CONTOURS
- MINOR CONTOURS
- PROPOSED KERB
- EXISTING KERB
- EXTENTS OF BATTER
- PROPOSED PAVED FOOTPATH
- PROPOSED CONCRETE FOOTPATH
- PROPOSED RETAINING WALL
- EXISTING RETAINING WALL
- PROPOSED STORMWATER
- ex sw — EXISTING STORMWATER
- ex t — EXISTING TELSTRA
- ex e — EXISTING ELECTRICAL
- PROPOSED SW PIT
- PROPOSED LINTEL
- PROPOSED HEADWALL
- (1\1) PIT LABEL

CONTOUR INTERVAL = 0.2m

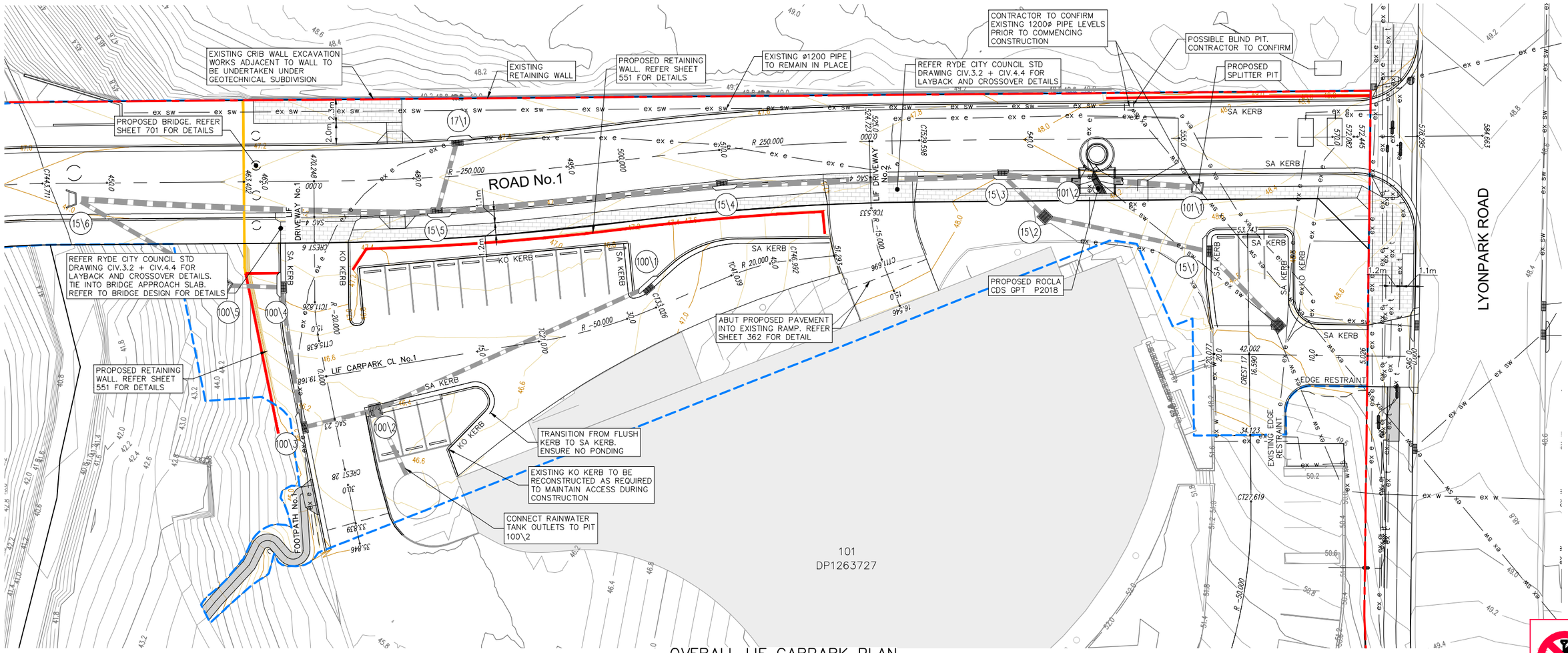

OVERALL LIF CARPARK PLAN

SCALE 1:200

These plans are referred to in certificate no. **16746** approved by:

Eric Hausfeld
Registered Certifier

Registration No: BDC 2416
Categories: Certifier – Subdivision; Certifier – Strata; Certifier – Stormwater; Certifier – Road & Drainage; Certifier – Hydraulic (stormwater)

Land Development Certificates
www.LDC.com.au

CAUTION:

1. IT IS THE RESPONSIBILITY OF THE CIVIL WORKS CONTRACTOR TO DETERMINE THE LOCATION & LEVEL OF EXISTING SERVICES USING NON DESTRUCTIVE METHODS PRIOR TO COMMENCING WORKS ON SITE.

DIAL 1100 BEFORE YOU DIG

CONSTRUCTION ISSUE

REV.	DATE	AMENDMENT	DESIGN	DRAWN	CHECKED	APPROVED
1	21.01.22	ISSUED FOR CONSTRUCTION	B.M.	J.J.	B.M.	B.M.

SCALES: A1 1:200 — 0 5.0 10.0m — A3 1:400

DESIGN FILE S:\300001\DESIGN\12D\STAGE 2 CC\DESIGN FILE.project

ALL DIMENSIONS ARE IN METRES. DO NOT SCALE

adw Johnson
Central Coast
5 Pioneer Avenue,
P.O. Box 3717,
Tuggerah N.S.W. 2259
Phone: (02) 4305 4300
Fax: (02) 4305 4399
email: coast@adwjohnson.com.au
www.adwjohnson.com.au
ABN 62 129 445 398

CLIENT: FRASERS PROPERTY

PROPERTY DESCRIPTION: LOT 100 D.P.1262209 & LOT 1 D.P.859537
EPPING ROAD & LYONPARK ROAD,
MACQUARIE PARK
SSDA 8903

SURVEYED: ADW Johnson
DATUM: GDA94 M.G.A. ZONE 56 A.H.D.

PROJECT: PROPOSED SUBDIVISION

PLAN TITLE: OVERALL LIF CARPARK PLAN

PROJECT No. 300001(2) – DISCIPLINE ENG – NUMBER 361 REV. 1

Plotted By: Ben Myles Plot Date: 21/01/22 2:30:30PM Cad File: S:\300001\DRAWINGS\ENGINEERING\CIVIL\STAGE 2 CC ENG\300001(2)-ENG-361.DWG

300001(2)-ENG-362

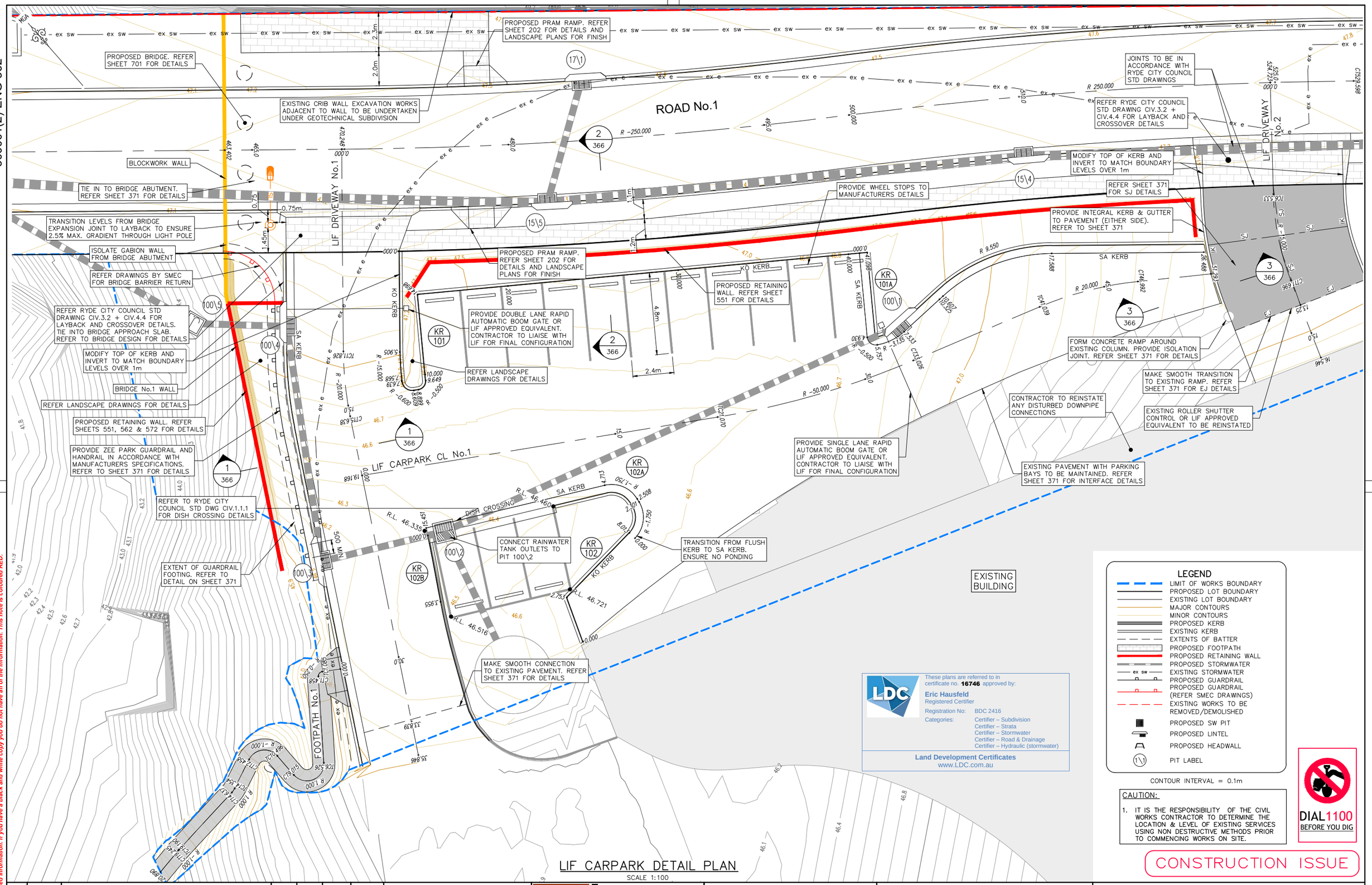

LIF CARPARK DETAIL PLAN

SCALE 1:100

REV.	DATE	AMENDMENT	DESIGN	DRAWN	CHECKED	APPROVED
1	21.01.22	ISSUED FOR CONSTRUCTION	B.M.	J.J.	B.M.	B.M.

SCALES: A1 1:100 — 0 2.5 5.0m — A3 1:200

DESIGN FILE S:\300001\DESIGN\12D\STAGE 2 CC\DESIGN FILE.project

ALL DIMENSIONS ARE IN METRES. DO NOT SCALE

adw Johnson
Central Coast
5 Pioneer Avenue,
P.O. Box 3717,
Tuggerah N.S.W. 2259
Phone: (02) 4305 4300
Fax: (02) 4305 4399
email: coast@adwjohnson.com.au
www.adwjohnson.com.au
ABN 62 129 445 398

CLIENT: FRASERS PROPERTY

PROPERTY DESCRIPTION: LOT 100 D.P.1262209 & LOT 1 D.P.859537, EPPING ROAD & LYONPARK ROAD, MACQUARIE PARK, SSDA 8903

SURVEYED: ADW Johnson

DATUM: GDA94 M.G.A. ZONE 56 A.H.D.

PROJECT: PROPOSED SUBDIVISION

PLAN TITLE: LIF CARPARK DETAIL PLAN, CARPARK No.1

PROJECT No.	DISCIPLINE	NUMBER	REV.
300001(2)	ENG	362	1

Plotted By: Ben Myles Plot Date: 21/01/22 2:30:37PM Cad File: S:\300001\DRAWINGS\ENGINEERING\CIVIL\STAGE 2 CC ENG\300001(2)-ENG-362.DWG

100mm AT FULL SIZE

This plan includes coloured information. If you have a black and white copy you do not have all of the information. This note is coloured RED.

300001(2)-ENG-363

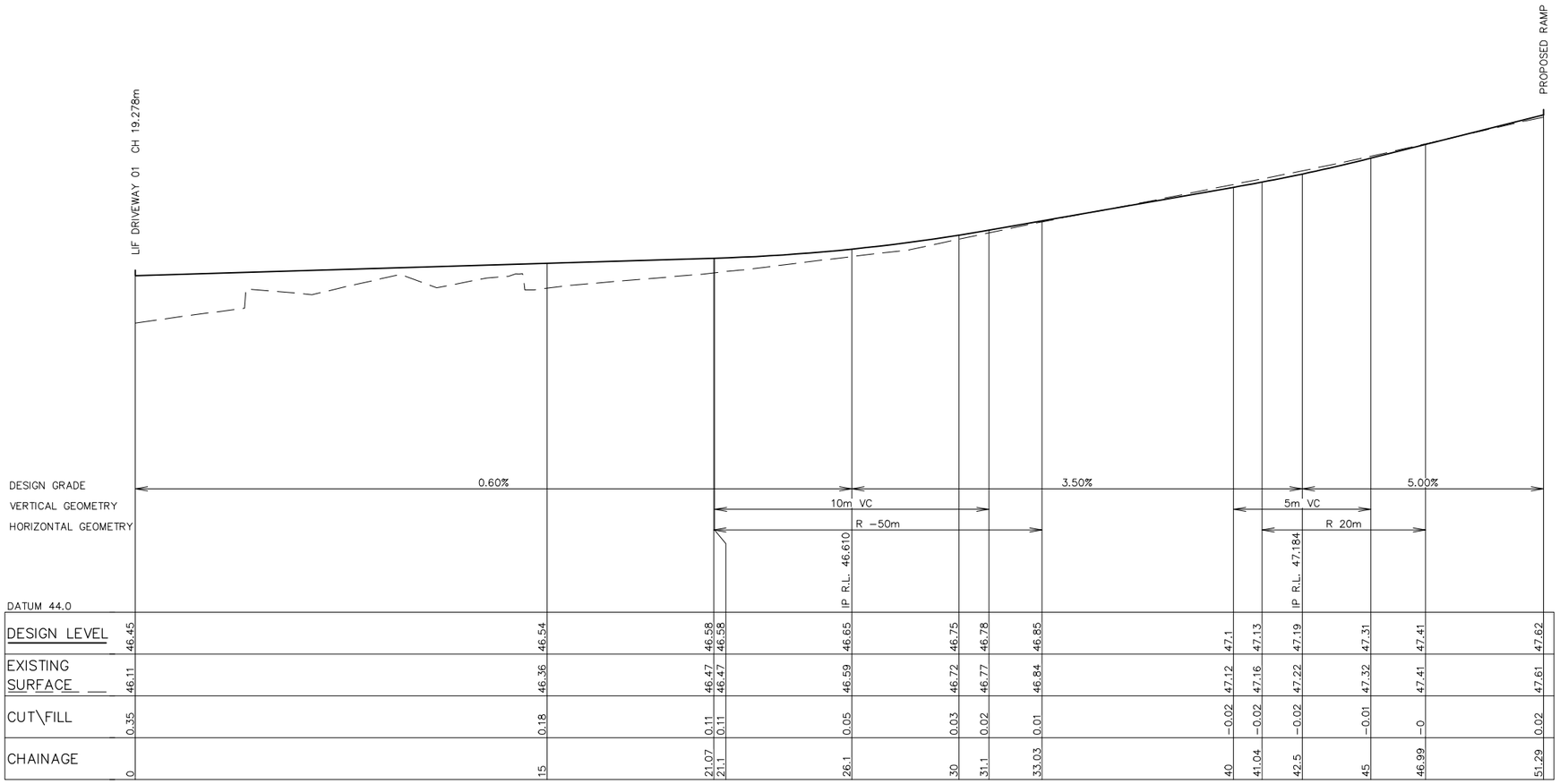

DESIGN LEVEL	46.45	46.54	46.58	46.58	46.65	46.75	46.78	46.85	47.1	47.13	47.19	47.31	47.41	47.62
EXISTING SURFACE	46.11	46.36	46.47	46.47	46.59	46.72	46.77	46.84	47.12	47.16	47.22	47.32	47.41	47.61
CUT\FILL	0.35	0.18	0.11	0.11	0.05	0.03	0.02	0.01	−0.02	−0.02	−0.02	−0.01	−0	0.02
CHAINAGE	0	15	21.07	21.1	26.1	30	31.1	33.03	40	41.04	42.5	45	46.99	51.29

LONGITUDINAL SECTION LIF CARPARK CL No.1

HORIZONTAL SCALE 1:100
VERTICAL SCALE 1:20

LIF CARPARK CL No.1 – SETOUT TABLE

PT	CHAINAGE	EASTING	NORTHING	BEARING	RAD/SPIRAL	A.LENGTH	DEFL.ANGLE
IP 1	0.000	325801.422	6260288.798	121°55'31.05"			
TC	21.070	325819.304	6260277.656	121°55'31.05"			
IP 2	27.048	325824.403	6260274.480		R = −50.000	11.957	13°42'04.59"
CT	33.026	325830.108	6260272.601	108°13'26.46"			
TC	41.039	325837.719	6260270.095	108°13'26.46"			
IP 3	44.016	325840.568	6260269.157		R = 20.000	5.953	17°03'15.55"
CT	46.992	325843.016	6260267.426	125°16'42.02"			
IP 4	51.293	325846.527	6260264.942	125°16'42.02"			

These plans are referred to in certificate no. **16746** approved by:
Eric Hausfeld
Registered Certifier
Registration No: BDC 2416
Categories: Certifier – Subdivision, Certifier – Strata, Certifier – Stormwater, Certifier – Road & Drainage, Certifier – Hydraulic (stormwater)
Land Development Certificates
www.LDC.com.au

DIAL1100 BEFORE YOU DIG

CONSTRUCTION ISSUE

REV.	DATE	AMENDMENT	DESIGN	DRAWN	CHECKED	APPROVED
1	21.01.22	ISSUED FOR CONSTRUCTION	B.M.	J.J.	B.M.	B.M.

SCALES: A1 1:100 (0, 2.5, 5.0m) A3 1:200; A1 1:20 (0, 0.5, 1.0m) A3 1:40

DESIGN FILE S:\300001\DESIGN\12D\STAGE 2 CC\DESIGN FILE.project

ALL DIMENSIONS ARE IN METRES. DO NOT SCALE

adw Johnson
Central Coast
5 Pioneer Avenue,
P.O. Box 3717,
Tuggerah N.S.W. 2259
Phone: (02) 4305 4300
Fax: (02) 4305 4399
email: coast@adwjohnson.com.au
www.adwjohnson.com.au
ABN 62 129 445 398

CLIENT: FRASERS PROPERTY

PROPERTY DESCRIPTION: LOT 100 D.P.1262209 & LOT 1 D.P.859537
EPPING ROAD & LYONPARK ROAD,
MACQUARIE PARK
SSDA 8903

SURVEYED: ADW Johnson
DATUM: GDA94 M.G.A. ZONE 56 A.H.D.

PROJECT: PROPOSED SUBDIVISION
PLAN TITLE: LIF CARPARK SECTION
CARPARK CL No.1

PROJECT No.	DISCIPLINE	NUMBER	REV.
300001(2) –	ENG –	363	1

Plotted By: Ben Myles Plot Date: 21/01/22 2:30:42PM Cad File: S:\300001\DRAWINGS\ENGINEERING\CIVIL\STAGE 2 CC ENG\300001(2)-ENG-363.DWG

100mm AT FULL SIZE

This plan includes coloured information. If you have a black and white copy you do not have all of the information. This note is coloured RED.

300001(2)-ENG-364

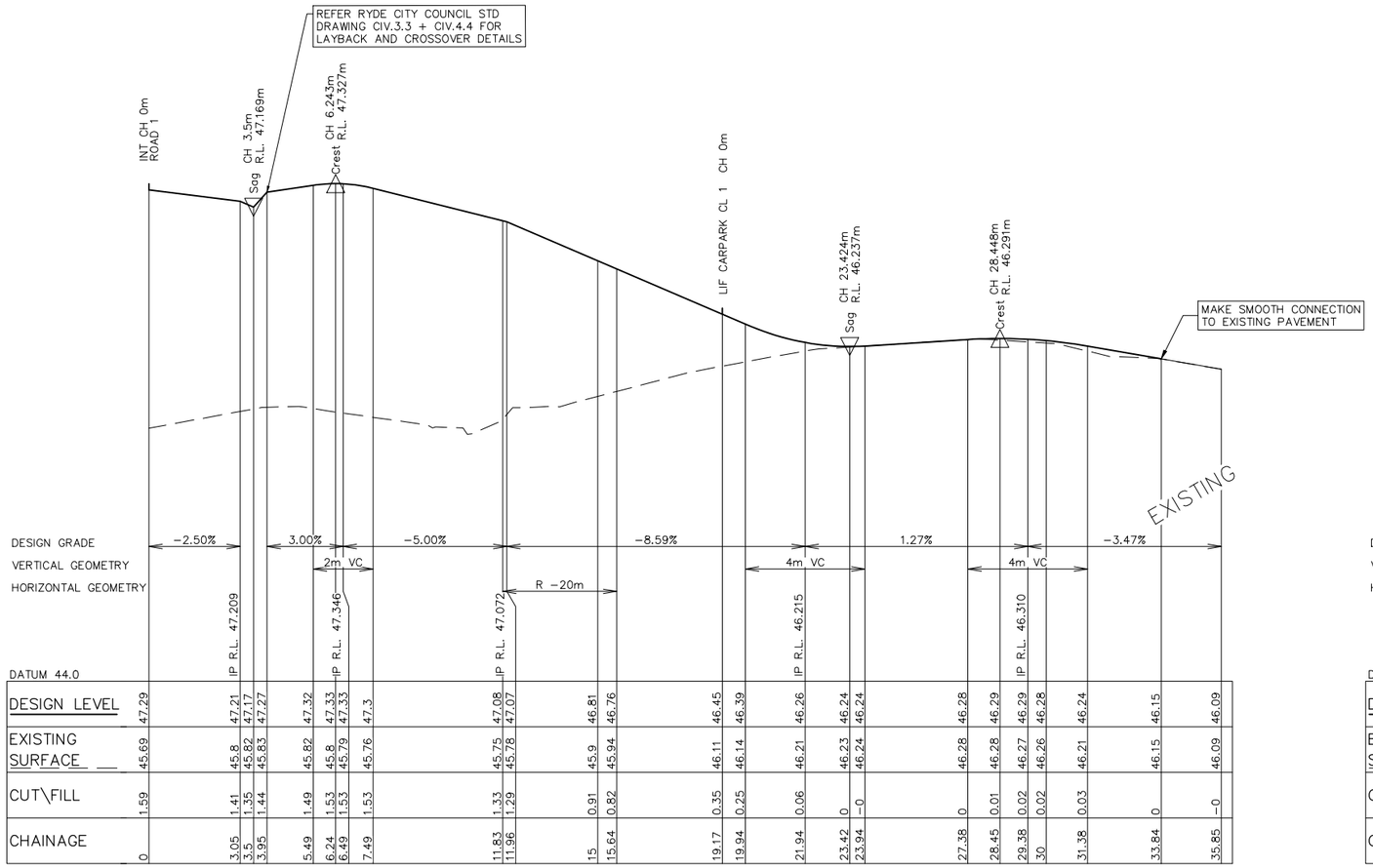

DESIGN LEVEL	47.29	47.21	47.17	47.27	47.32	47.33	47.33	47.3	47.08	47.07	46.81	46.76	46.45	46.39	46.26	46.24	46.24	46.28	46.29	46.29	46.28	46.24	46.15	46.09
EXISTING SURFACE	45.69	45.8	45.82	45.83	45.82	45.8	45.79	45.76	45.75	45.78	45.9	45.94	46.11	46.14	46.21	46.23	46.24	46.28	46.28	46.27	46.26	46.21	46.15	46.09
CUT\FILL	1.59	1.41	1.35	1.44	1.49	1.53	1.53	1.53	1.33	1.29	0.91	0.82	0.35	0.25	0.06	0	−0	0	0.01	0.02	0.02	0.03	0	−0
CHAINAGE	0	3.05	3.5	3.95	5.49	6.24	6.49	7.49	11.83	11.96	15	15.64	19.17	19.94	21.94	23.42	23.94	27.38	28.45	29.38	30	31.38	33.84	35.85

LONGITUDINAL SECTION LIF DRIVEWAY No.1

HORIZONTAL SCALE 1:100
VERTICAL SCALE 1:20

LIF DRIVEWAY No.1 – SETOUT TABLE							
PT	CHAINAGE	EASTING	NORTHING	BEARING	RAD/SPIRAL	A.LENGTH	DEFL.ANGLE
IP 1	0.000	325813.096	6260303.926	220°44'56.00"			
TC	11.826	325805.376	6260294.967	220°44'56.00"			
IP 2	13.732	325804.129	6260293.519		R = −20.000	3.812	10°55'09.50"
CT	15.638	325803.178	6260291.861	209°49'46.50"			
IP 3	35.846	325793.125	6260274.330	209°49'46.50"			

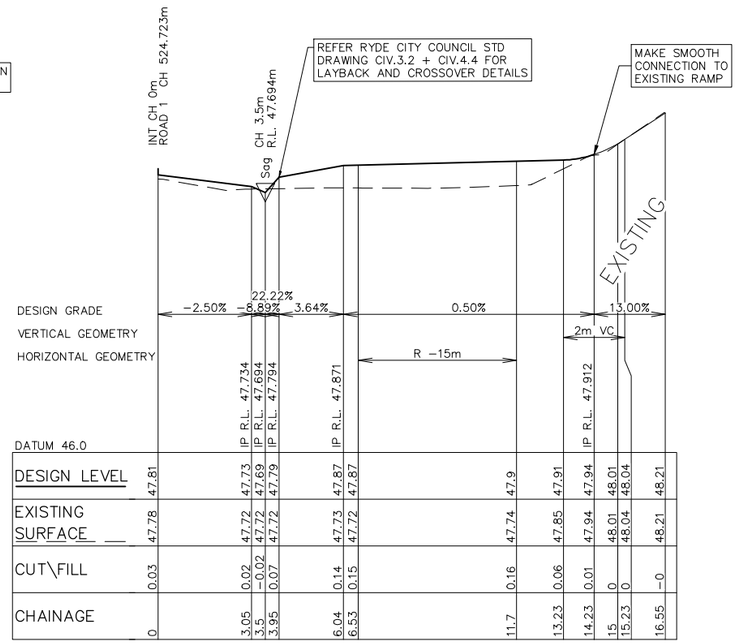

DESIGN LEVEL	47.81	47.73	47.69	47.79	47.87	47.87	47.9	47.91	47.94	48.01	48.04	48.21
EXISTING SURFACE	47.78	47.72	47.72	47.72	47.73	47.72	47.74	47.85	47.94	48.01	48.04	48.21
CUT\FILL	0.03	0.02	−0.02	0.07	0.14	0.15	0.16	0.06	0.01	0	0	−0
CHAINAGE	0	3.05	3.5	3.95	6.04	6.53	11.7	13.23	14.23	15	15.23	16.55

LONGITUDINAL SECTION LIF DRIVEWAY No.2

HORIZONTAL SCALE 1:100
VERTICAL SCALE 1:20

LIF DRIVEWAY No.2 – SETOUT TABLE							
PT	CHAINAGE	EASTING	NORTHING	BEARING	RAD/SPIRAL	A.LENGTH	DEFL.ANGLE
IP 1	0.000	325856.514	6260271.073	219°37'54.05"			
TC	6.533	325852.347	6260266.042	219°37'54.05"			
IP 2	9.115	325850.684	6260264.034		R = −15.000	5.163	19°43'18.41"
CT	11.696	325849.796	6260261.582	199°54'35.64"			
IP 3	16.546	325848.144	6260257.022	199°54'35.64"			

LDC

These plans are referred to in certificate no. **16746** approved by:

Eric Hausfeld
Registered Certifier

Registration No: BDC 2416

Categories: Certifier – Subdivision
Certifier – Strata
Certifier – Stormwater
Certifier – Road & Drainage
Certifier – Hydraulic (stormwater)

Land Development Certificates
www.LDC.com.au

DIAL 1100 BEFORE YOU DIG

CONSTRUCTION ISSUE

REV.	DATE	AMENDMENT	DESIGN	DRAWN	CHECKED	APPROVED
1	21.01.22	ISSUED FOR CONSTRUCTION	B.M.	J.J.	B.M.	B.M.

SCALES: A1 1:100 (0, 2.5, 5.0m) A3 1:200; A1 1:20 (0, 0.5, 1.0m) A3 1:40

DESIGN FILE S:\300001\DESIGN\12D\STAGE 2 CC\DESIGN FILE.project

ALL DIMENSIONS ARE IN METRES. DO NOT SCALE

adw Johnson
Central Coast
5 Pioneer Avenue,
P.O. Box 3717,
Tuggerah N.S.W. 2259
Phone: (02) 4305 4300
Fax: (02) 4305 4399
email: coast@adwjohnson.com.au
www.adwjohnson.com.au
ABN 62 129 445 398

CLIENT: FRASERS PROPERTY

PROPERTY DESCRIPTION
LOT 100 D.P.1262209 & LOT 1 D.P.859537
EPPING ROAD & LYONPARK ROAD,
MACQUARIE PARK
SSDA 8903

SURVEYED: ADW Johnson
DATUM: GDA94 M.G.A. ZONE 56 A.H.D.

PROJECT: PROPOSED SUBDIVISION

PLAN TITLE: DRIVEWAY LONGITUDINAL SECTIONS
DRIVEWAY No.1 & No.2

PROJECT No.	DISCIPLINE	NUMBER	REV.
300001(2) –	ENG –	364	1

Plotted By: Ben Myles Plot Date: 21/01/22 2:30:46PM Cad File: S:\300001\DRAWINGS\ENGINEERING\CIVIL\STAGE 2 CC ENG\300001(2)-ENG-364.DWG

100mm AT FULL SIZE

This plan includes coloured information. If you have a black and white copy you do not have all of the information. This note is coloured RED.

300001(2)-ENG-365

KR101 – SETOUT TABLE							
PT	CHAINAGE	EASTING	NORTHING	BEARING	RAD/SPIRAL	A.LENGTH	DEFL.ANGLE
IP 1	0.000	325811.689	6260297.238	220°44'56.00"			
TC	5.905	325807.835	6260292.765	220°44'56.00"			
IP 2	6.736	325807.292	6260292.134		R = −15.000	1.663	6°21'08.21"
CT	7.568	325806.821	6260291.448	214°23'47.79"			
TC	7.639	325806.781	6260291.389	214°23'47.79"			
IP 3	8.124	325806.427	6260290.871		R = −0.600	0.969	92°33'37.65"
CT	8.609	325806.960	6260290.540	121°50'10.14"			
TC	8.899	325807.206	6260290.387	121°50'10.14"			
IP 4	9.274	325807.602	6260290.141		R = −0.500	0.750	85°56'28.04"
CT	9.649	325807.875	6260290.518	35°53'42.10"			
IP 5	14.698	325810.835	6260294.609				
IP 6	41.098	325832.222	6260279.130	125°53'42.10"			

KR101A – SETOUT TABLE							
PT	CHAINAGE	EASTING	NORTHING	BEARING	RAD/SPIRAL	A.LENGTH	DEFL.ANGLE
IP 1	0.000	325831.857	6260279.394	215°53'42.10"			
TC	4.930	325828.967	6260275.401	215°53'42.10"			
IP 2	5.343	325828.649	6260274.960		R = −0.500	0.827	94°45'19.41"
CC	5.757	325829.114	6260274.679	121°08'22.69"			
IP 3	6.645	325829.895	6260274.207		R = −3.135	1.776	32°27'45.28"
IP 4	7.533	325830.807	6260274.229				
IP 5	10.325	325833.599	6260274.284				
TC	10.607	325833.881	6260274.289	88°51'10.68"			
IP 6	14.098	325837.535	6260274.363		R = 9.550	6.981	41°53'03.19"
CT	17.588	325840.304	6260271.977	130°44'13.87"			
IP 7	26.488	325847.048	6260266.170	130°44'13.87"			

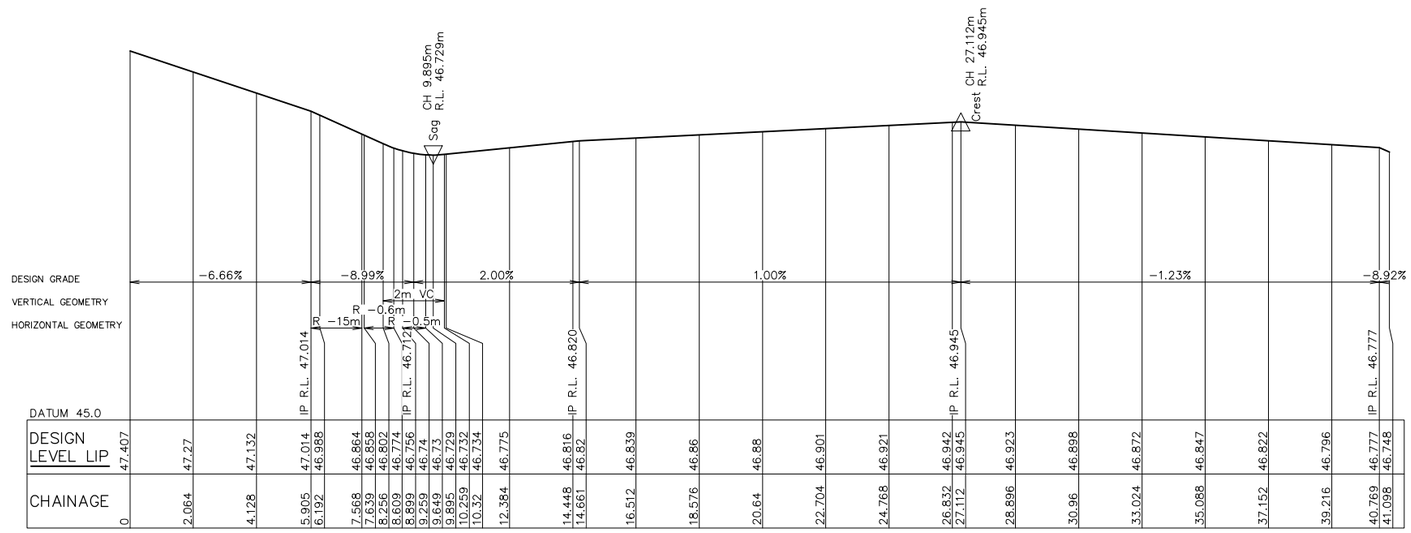

LONGITUDINAL SECTION KR101

HORIZONTAL SCALE 1:100
VERTICAL SCALE 1:20

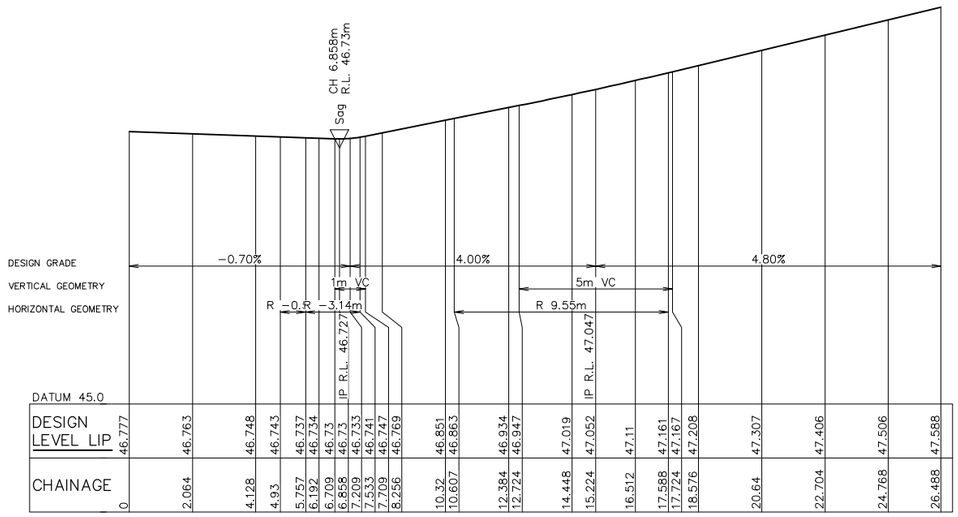

LONGITUDINAL SECTION KR101A

HORIZONTAL SCALE 1:100
VERTICAL SCALE 1:20

KR102 – SETOUT TABLE				
PT	CHAINAGE	EASTING	NORTHING	BEARING
IP 1	0.000	325804.733	6260272.969	21°09'13.79"
IP 2	2.753	325805.726	6260275.537	
IP 3	8.013	325810.969	6260275.964	85°20'45.46"

KR102A – SETOUT TABLE							
PT	CHAINAGE	EASTING	NORTHING	BEARING	RAD/SPIRAL	A.LENGTH	DEFL.ANGLE
IP 1	0.000	325811.005	6260275.515	85°20'45.46"			
IP 2	1.151	325812.352	6260275.625		R = −1.750	2.301	75°21'00.69"
CT	2.301	325812.587	6260276.956	9°59'44.77"			
TC	2.508	325812.623	6260277.159	9°59'44.77"			
IP 3	3.610	325812.844	6260278.416		R = −1.750	2.205	72°12'23.06"
CT	4.713	325811.715	6260279.011	297°47'21.71"			
IP 4	15.451	325802.215	6260284.017	297°47'21.71"			

KR102B – SETOUT TABLE				
PT	CHAINAGE	EASTING	NORTHING	BEARING
IP 1	0.000	325801.777	6260283.231	210°33'50.53"
IP 2	3.505	325799.994	6260280.213	210°33'50.53"

These plans are referred to in certificate no. **16746** approved by:

Eric Hausfeld
Registered Certifier

Registration No: BDC 2416
Categories: Certifier – Subdivision
Certifier – Strata
Certifier – Stormwater
Certifier – Road & Drainage
Certifier – Hydraulic (stormwater)

Land Development Certificates
www.LDC.com.au

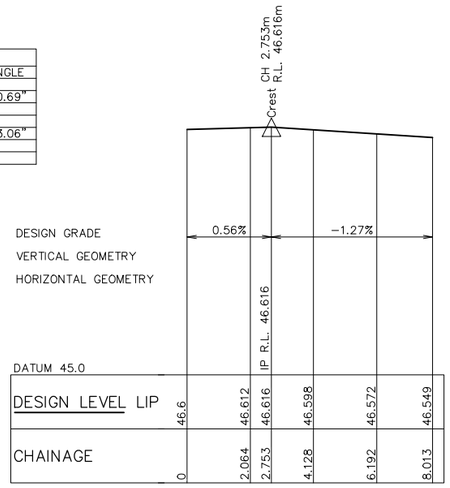

LONGITUDINAL SECTION KR102

HORIZONTAL SCALE 1:100
VERTICAL SCALE 1:20

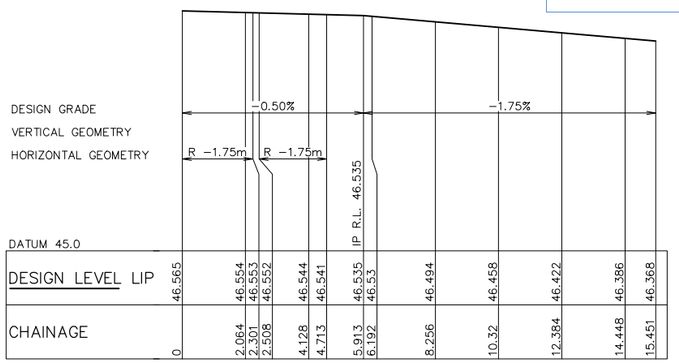

LONGITUDINAL SECTION KR102A

HORIZONTAL SCALE 1:100
VERTICAL SCALE 1:20

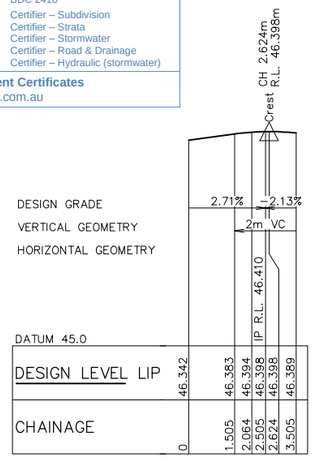

LONGITUDINAL SECTION KR102B

HORIZONTAL SCALE 1:100
VERTICAL SCALE 1:20

DIAL 1100 BEFORE YOU DIG

CONSTRUCTION ISSUE

REV.	DATE	AMENDMENT	DESIGN	DRAWN	CHECKED	APPROVED
1	21.01.22	ISSUED FOR CONSTRUCTION	B.M.	J.J.	B.M.	B.M.

SCALES: A1 1:100 (0, 2.5, 5.0m) A3 1:200; A1 1:20 (0, 0.5, 1.0m) A3 1:40

DESIGN FILE S:\300001\DESIGN\12D\STAGE 2 CC\DESIGN FILE.project

ALL DIMENSIONS ARE IN METRES. DO NOT SCALE

adw Johnson
Central Coast
5 Pioneer Avenue,
P.O. Box 3717,
Tuggerah N.S.W. 2259
Phone: (02) 4305 4300
Fax: (02) 4305 4399
email: coast@adwjohnson.com.au
www.adwjohnson.com.au
ABN 62 129 445 398

CLIENT: FRASERS PROPERTY

PROPERTY DESCRIPTION: LOT 100 D.P.1262209 & LOT 1 D.P.859537
EPPING ROAD & LYONPARK ROAD,
MACQUARIE PARK
SSDA 8903

SURVEYED: ADW Johnson
DATUM: GDA94 M.G.A. ZONE 56 A.H.D.

PROJECT: PROPOSED SUBDIVISION

PLAN TITLE: KERB RETURN LONGITUDINAL SECTIONS
KR101, KR101A,
KR102, KR102A & KR102B

PROJECT No.	DISCIPLINE	NUMBER	REV.
300001(2) –	ENG –	365	1

Plotted By: Ben Myles Plot Date: 21/01/22 2:30:50PM Cad File: S:\300001\DRAWINGS\ENGINEERING\CIVIL\STAGE 2 CC ENG\300001(2)-ENG-365.DWG

100mm AT FULL SIZE

This plan includes coloured information. If you have a black and white copy you do not have all of the information. This note is coloured RED.

300001(2)-ENG-366

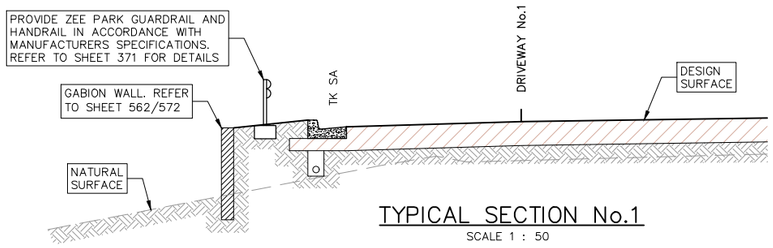

TYPICAL SECTION No.1

SCALE 1 : 50

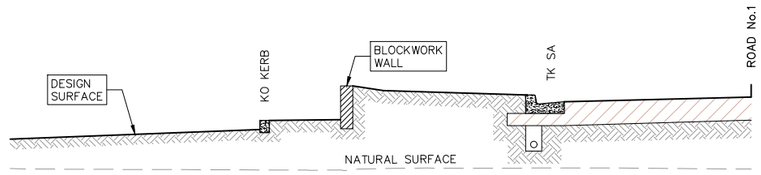

TYPICAL SECTION No.2

SCALE 1 : 50

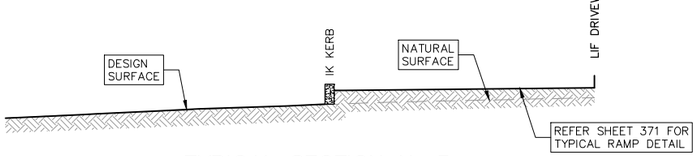

TYPICAL SECTION No.3

SCALE 1 : 50

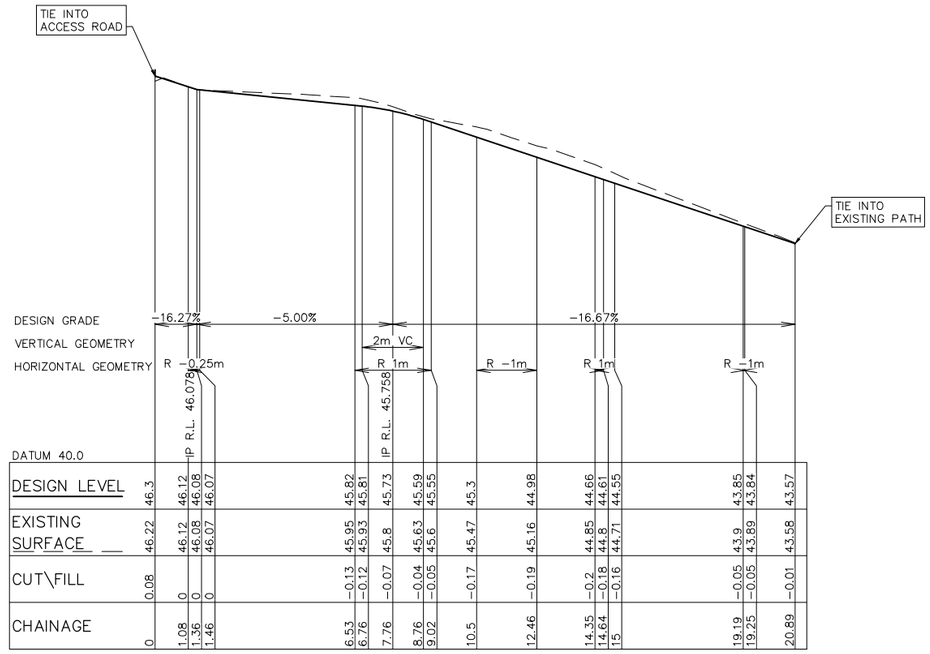

LONGITUDINAL SECTION FOOTPATH No.1

HORIZONTAL SCALE 1:100
VERTICAL SCALE 1:50

FOOTPATH No.1 – SETOUT TABLE

PT	CHAINAGE	EASTING	NORTHING	BEARING	RAD/SPIRAL	A.LENGTH	DEFL.ANGLE
IP 1	0.000	325793.004	6260281.114	303°06'36.05"			
TC	1.085	325792.095	6260281.707	303°06'36.05"			
IP 2	1.271	325791.902	6260281.833		R = −0.250	0.373	85°32'01.21"
CT	1.458	325791.761	6260281.650	217°34'34.84"			
TC	6.526	325788.670	6260277.633	217°34'34.84"			
IP 3	7.148	325788.233	6260277.065		R = 1.000	1.245	71°19'44.70"
CT	7.771	325787.554	6260277.297	288°54'19.54"			
IP 4	8.393	325786.875	6260277.530		R = 1.000	1.245	71°19'44.70"
CT	9.015	325786.878	6260278.247	0°14'04.25"			
TC	10.496	325786.884	6260279.728	0°14'04.25"			
IP 5	11.477	325786.890	6260281.223		R = −1.000	1.962	112°26'20.49"
CT	12.458	325785.506	6260280.658	247°47'43.76"			
TC	14.354	325783.751	6260279.941	247°47'43.76"			
IP 6	14.496	325783.619	6260279.887		R = 1.000	0.282	16°10'53.72"
CT	14.637	325783.478	6260279.872	263°58'37.47"			
TC	19.190	325778.949	6260279.395	263°58'37.47"			
IP 7	19.218	325778.922	6260279.392		R = −1.000	0.055	3°08'59.19"
CT	19.245	325778.895	6260279.387	260°49'38.29"			
IP 8	20.890	325777.271	6260279.125	260°49'38.29"			

These plans are referred to in certificate no. **16746** approved by:

Eric Hausfeld
Registered Certifier

Registration No: BDC 2416
Categories: Certifier – Subdivision
Certifier – Strata
Certifier – Stormwater
Certifier – Road & Drainage
Certifier – Hydraulic (stormwater)

Land Development Certificates
www.LDC.com.au

DIAL 1100 BEFORE YOU DIG

CONSTRUCTION ISSUE

REV.	DATE	AMENDMENT	DESIGN	DRAWN	CHECKED	APPROVED
1	21.01.22	ISSUED FOR CONSTRUCTION	B.M.	J.J.	B.M.	B.M.

SCALES: A1 1:100 (0, 2.5, 5.0m) A3 1:200; A1 1:50 (0, 1.25, 2.5m) A3 1:100

DESIGN FILE S:\300001\DESIGN\12D\STAGE 2 CC\DESIGN FILE.project

ALL DIMENSIONS ARE IN METRES. DO NOT SCALE

adw Johnson
Central Coast
5 Pioneer Avenue,
P.O. Box 3717,
Tuggerah N.S.W. 2259
Phone: (02) 4305 4300
Fax: (02) 4305 4399
email: coast@adwjohnson.com.au
www.adwjohnson.com.au
ABN 62 129 445 398

CLIENT: FRASERS PROPERTY

PROPERTY DESCRIPTION
LOT 100 D.P.1262209 & LOT 1 D.P.859537
EPPING ROAD & LYONPARK ROAD,
MACQUARIE PARK
SSDA 8903

SURVEYED: ADW Johnson
DATUM: GDA94 M.G.A. ZONE 56 A.H.D.

PROJECT: PROPOSED SUBDIVISION

PLAN TITLE: FOOTPATH No.1 LONGITUDINAL SECTION & TYPICAL CARPARK No.1 DETAILS

PROJECT No. 300001(2) – DISCIPLINE ENG – NUMBER 366 REV. 1

Plotted By: Ben Myles Plot Date: 21/01/22 2:30:54PM Cad File: S:\300001\DRAWINGS\ENGINEERING\CIVIL\STAGE 2 CC ENG\300001(2)-ENG-366.DWG

100mm AT FULL SIZE

This plan includes coloured information. If you have a black and white copy you do not have all of the information. This note is coloured RED.

300001(2)-ENG-367

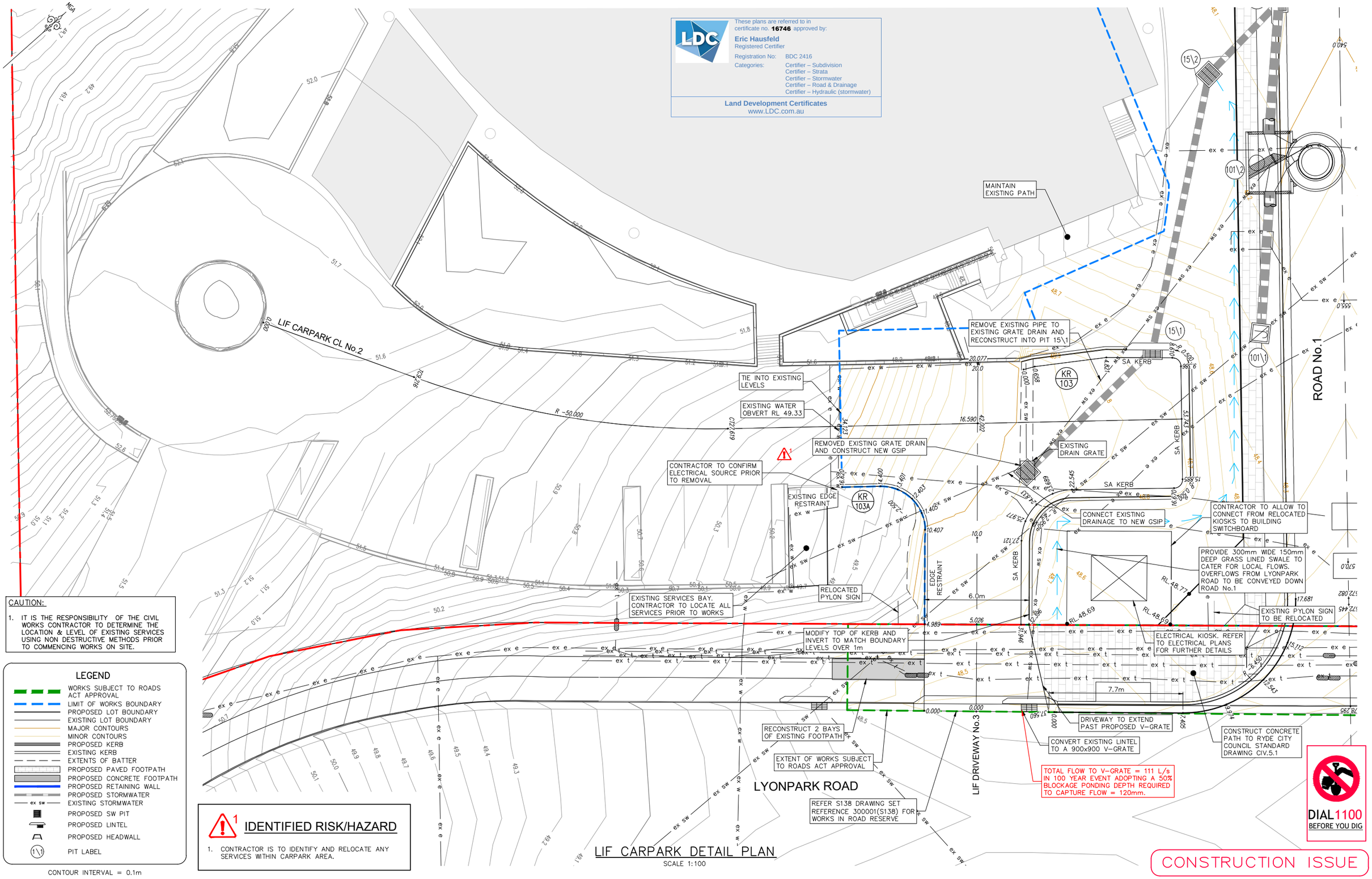

These plans are referred to in certificate no. **16746** approved by:

Eric Hausfeld
Registered Certifier

Registration No: BDC 2416

Categories: Certifier – Subdivision
Certifier – Strata
Certifier – Stormwater
Certifier – Road & Drainage
Certifier – Hydraulic (stormwater)

Land Development Certificates
www.LDC.com.au

CAUTION:

1. IT IS THE RESPONSIBILITY OF THE CIVIL WORKS CONTRACTOR TO DETERMINE THE LOCATION & LEVEL OF EXISTING SERVICES USING NON DESTRUCTIVE METHODS PRIOR TO COMMENCING WORKS ON SITE.

LEGEND

- WORKS SUBJECT TO ROADS ACT APPROVAL
- LIMIT OF WORKS BOUNDARY
- PROPOSED LOT BOUNDARY
- EXISTING LOT BOUNDARY
- MAJOR CONTOURS
- MINOR CONTOURS
- PROPOSED KERB
- EXISTING KERB
- EXTENTS OF BATTER
- PROPOSED PAVED FOOTPATH
- PROPOSED CONCRETE FOOTPATH
- PROPOSED RETAINING WALL
- PROPOSED STORMWATER
- EXISTING STORMWATER
- PROPOSED SW PIT
- PROPOSED LINTEL
- PROPOSED HEADWALL
- PIT LABEL

CONTOUR INTERVAL = 0.1m

IDENTIFIED RISK/HAZARD

1. CONTRACTOR IS TO IDENTIFY AND RELOCATE ANY SERVICES WITHIN CARPARK AREA.

LIF CARPARK DETAIL PLAN

SCALE 1:100

CONSTRUCTION ISSUE

100mm AT FULL SIZE

This plan includes coloured information. If you have a black and white copy you do not have all of the information. This note is coloured RED.

REV.	DATE	AMENDMENT	DESIGN	DRAWN	CHECKED	APPROVED
1	21.01.22	ISSUED FOR CONSTRUCTION	B.M.	J.J.	B.M.	B.M.

SCALES: A1 1:100 — 0 2.5 5.0m — A3 1:200

DESIGN FILE S:\300001\DESIGN\12D\STAGE 2 CC\DESIGN FILE.project

ALL DIMENSIONS ARE IN METRES. DO NOT SCALE

adw Johnson

Central Coast
5 Pioneer Avenue,
P.O. Box 3717,
Tuggerah N.S.W. 2259
Phone: (02) 4305 4300
Fax: (02) 4305 4399
email: coast@adwjohnson.com.au
www.adwjohnson.com.au
ABN 62 129 445 398

CLIENT: FRASERS PROPERTY

PROPERTY DESCRIPTION: LOT 100 D.P.1262209 & LOT 1 D.P.859537
EPPING ROAD & LYONPARK ROAD,
MACQUARIE PARK
SSDA 8903

SURVEYED: ADW Johnson

DATUM: GDA94 M.G.A. ZONE 56 A.H.D.

PROJECT: PROPOSED SUBDIVISION

PLAN TITLE: LIF CARPARK DETAIL PLAN
CARPARK No.2

PROJECT No.	DISCIPLINE	NUMBER	REV.
300001(2) –	ENG –	367	1

Plotted By: Ben Myles Plot Date: 21/01/22 2:31:02PM Cad File: S:\300001\DRAWINGS\ENGINEERING\CIVIL\STAGE 2 CC ENG\300001(2)-ENG-367.DWG

300001(2)-ENG-368

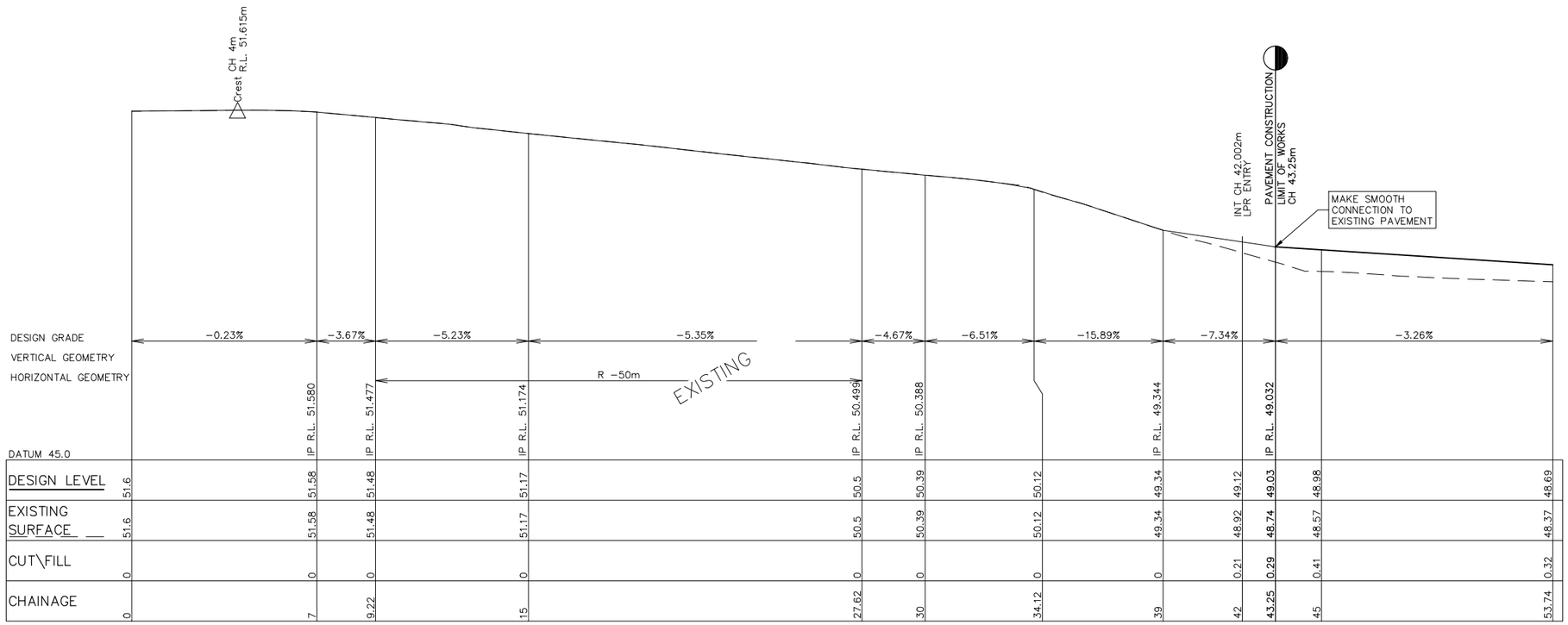

LONGITUDINAL SECTION LIF CARPARK CL No.2

HORIZONTAL SCALE 1:100
VERTICAL SCALE 1:50

LIF CARPARK CL No.2 – SETOUT TABLE

PT	CHAINAGE	EASTING	NORTHING	BEARING	RAD/SPIRAL	A.LENGTH	DEFL.ANGLE
IP 1	0.000	325839.061	6260204.085	61°32'48.53"			
TC	9.216	325847.164	6260208.476	61°32'48.53"			
IP 2	18.418	325855.346	6260212.911		R = −50.000	18.403	21°05'16.04"
CT	27.619	325861.385	6260219.992	40°27'32.49"			
IP 3	53.743	325878.337	6260239.869	40°27'32.49"			

These plans are referred to in certificate no. **16746** approved by:
Eric Hausfeld
Registered Certifier
Registration No: BDC 2416
Categories: Certifier – Subdivision; Certifier – Strata; Certifier – Stormwater; Certifier – Road & Drainage; Certifier – Hydraulic (stormwater)
Land Development Certificates
www.LDC.com.au

DIAL1100 BEFORE YOU DIG

CONSTRUCTION ISSUE

REV.	DATE	AMENDMENT	DESIGN	DRAWN	CHECKED	APPROVED
1	21.01.22	ISSUED FOR CONSTRUCTION	B.M.	J.J.	B.M.	B.M.

SCALES: A1 1:100 (0, 2.5, 5.0m) A3 1:200; A1 1:50 (0, 1.25, 2.5m) A3 1:100

DESIGN FILE S:\300001\DESIGN\12D\STAGE 2 CC\DESIGN FILE.project

ALL DIMENSIONS ARE IN METRES. DO NOT SCALE

adw Johnson
Central Coast
5 Pioneer Avenue,
P.O. Box 3717,
Tuggerah N.S.W. 2259
Phone: (02) 4305 4300
Fax: (02) 4305 4399
email: coast@adwjohnson.com.au
www.adwjohnson.com.au
ABN 62 129 445 398

CLIENT: FRASERS PROPERTY

PROPERTY DESCRIPTION: LOT 100 D.P.1262209 & LOT 1 D.P.859537
EPPING ROAD & LYONPARK ROAD,
MACQUARIE PARK
SSDA 8903

SURVEYED: ADW Johnson
DATUM: GDA94 M.G.A. ZONE 56 A.H.D.

PROJECT: PROPOSED SUBDIVISION

PLAN TITLE: LIF CARPARK SECTION
CARPARK CL No.2

PROJECT No.	DISCIPLINE	NUMBER	REV.
300001(2) –	ENG –	368	1

Plotted By: Ben Myles Plot Date: 21/01/22 2:31:06PM Cad File: S:\300001\DRAWINGS\ENGINEERING\CIVIL\STAGE 2 CC ENG\300001(2)-ENG-368.DWG

100mm AT FULL SIZE

This plan includes coloured information. If you have a black and white copy you do not have all of the information. This note is coloured RED.

300001(2)-ENG-369

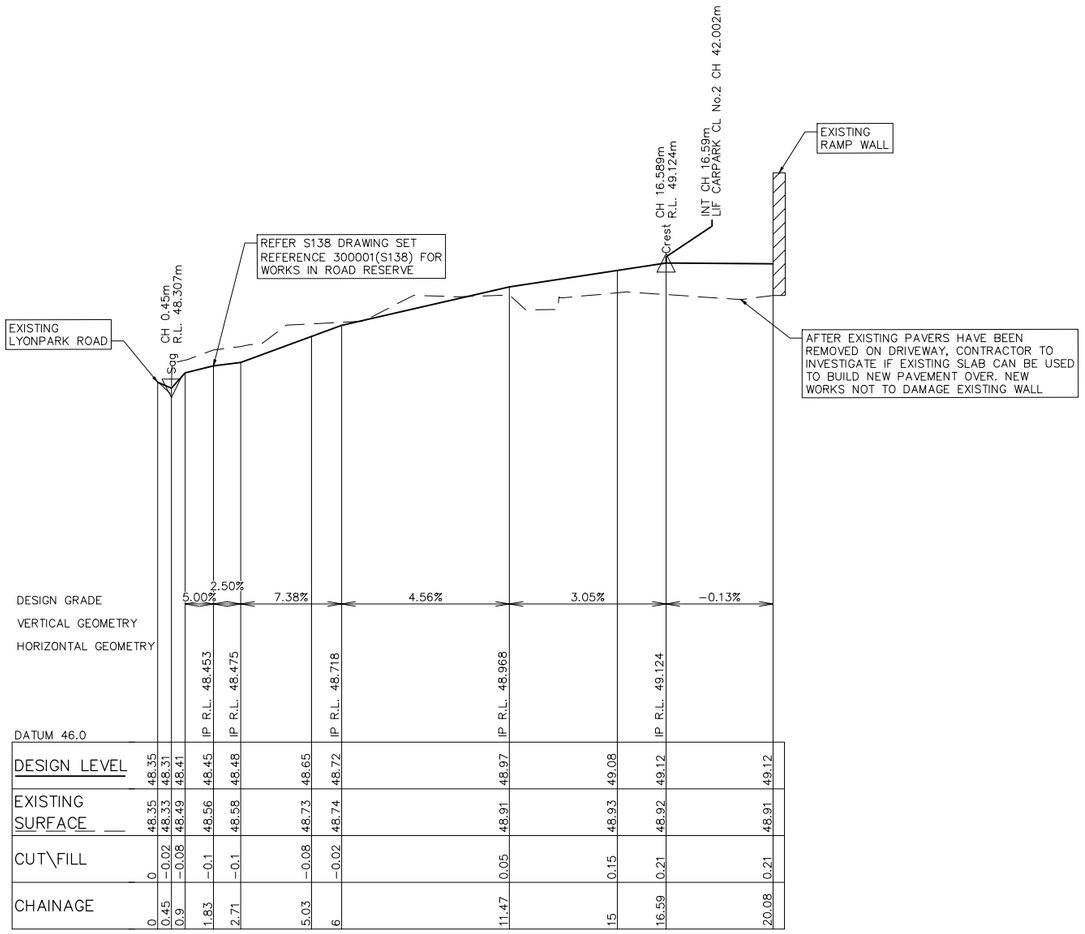

DESIGN LEVEL	48.35	48.31	48.41	48.45	48.48	48.65	48.72	48.97	49.08	49.12	49.12
EXISTING SURFACE	48.35	48.33	48.49	48.56	48.58	48.73	48.74	48.91	48.93	48.92	48.91
CUT\FILL	0	−0.02	−0.08	−0.1	−0.1	−0.08	−0.02	0.05	0.15	0.21	0.21
CHAINAGE	0	0.45	0.9	1.83	2.71	5.03	6	11.47	15	16.59	20.08

LONGITUDINAL SECTION LIF DRIVEWAY No.3

HORIZONTAL SCALE 1:100
VERTICAL SCALE 1:20

DRIVEWAY No.3 – SETOUT TABLE				
PT	CHAINAGE	EASTING	NORTHING	BEARING
IP 1	0.000	325883.058	6260219.847	311°56'25.75"
IP 2	20.077	325868.125	6260233.265	311°56'25.75"

These plans are referred to in certificate no. **16746** approved by:
Eric Hausfeld
Registered Certifier
Registration No: BDC 2416
Categories: Certifier – Subdivision, Certifier – Strata, Certifier – Stormwater, Certifier – Road & Drainage, Certifier – Hydraulic (stormwater)
Land Development Certificates
www.LDC.com.au

DIAL1100 BEFORE YOU DIG

CONSTRUCTION ISSUE

REV.	DATE	AMENDMENT	DESIGN	DRAWN	CHECKED	APPROVED
1	21.01.22	ISSUED FOR CONSTRUCTION	B.M.	J.J.	B.M.	B.M.

SCALES: A1 1:100 (0, 2.5, 5.0m) A3 1:200; A1 1:20 (0, 0.5, 1.0m) A3 1:40

DESIGN FILE S:\300001\DESIGN\12D\STAGE 2 CC\DESIGN FILE.project

ALL DIMENSIONS ARE IN METRES. DO NOT SCALE

adw Johnson
Central Coast
5 Pioneer Avenue,
P.O. Box 3717,
Tuggerah N.S.W. 2259
Phone: (02) 4305 4300
Fax: (02) 4305 4399
email: coast@adwjohnson.com.au
www.adwjohnson.com.au
ABN 62 129 445 398

CLIENT: FRASERS PROPERTY

PROPERTY DESCRIPTION: LOT 100 D.P.1262209 & LOT 1 D.P.859537
EPPING ROAD & LYONPARK ROAD,
MACQUARIE PARK
SSDA 8903

SURVEYED: ADW Johnson
DATUM: GDA94 M.G.A. ZONE 56 A.H.D.

PROJECT: PROPOSED SUBDIVISION

PLAN TITLE: DRIVEWAY LONGITUDINAL SECTION
DRIVEWAY No.03

PROJECT No.	DISCIPLINE	NUMBER	REV.
300001(2) –	ENG –	369	1

Plotted By: Ben Myles Plot Date: 21/01/22 2:31:10PM Cad File: S:\300001\DRAWINGS\ENGINEERING\CIVIL\STAGE 2 CC ENG\300001(2)-ENG-369.DWG

100mm AT FULL SIZE

This plan includes coloured information. If you have a black and white copy you do not have all of the information. This note is coloured RED.

300001(2)-ENG-370

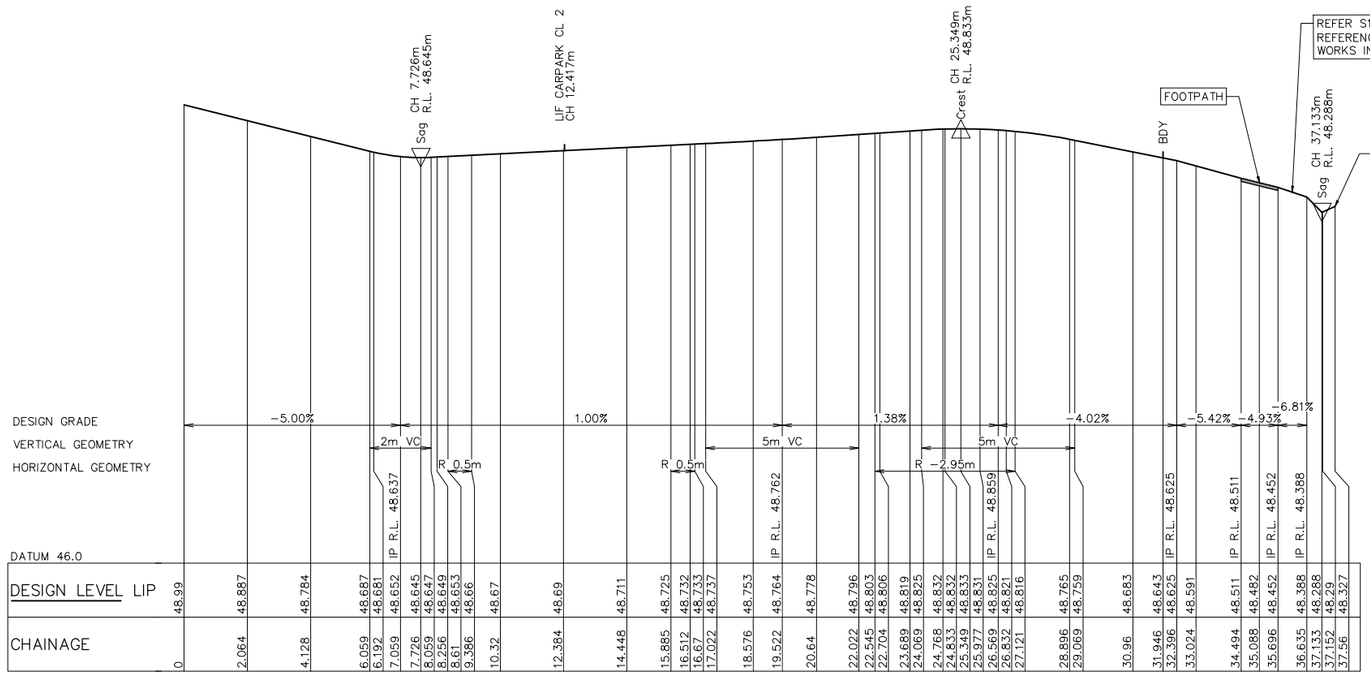

LONGITUDINAL SECTION KR103

HORIZONTAL SCALE 1:100
VERTICAL SCALE 1:20

KR103 – SETOUT TABLE							
PT	CHAINAGE	EASTING	NORTHING	BEARING	RAD/SPIRAL	A.LENGTH	DEFL.ANGLE
IP 1	0.000	325870.157	6260234.968	27°28'41.09"			
IP 2	0.658	325870.460	6260235.551				
IP 3	4.821	325872.812	6260238.986				
TC	8.610	325875.344	6260241.806	41°56'00.38"			
IP 4	8.998	325875.672	6260242.170		R = 0.500	0.776	88°52'47.74"
CT	9.386	325876.043	6260241.850	130°48'48.12"			
TC	15.885	325880.961	6260237.602	130°48'48.12"			
IP 5	16.277	325881.340	6260237.276		R = 0.500	0.785	90°00'00.00"
CT	16.670	325881.013	6260236.897	220°48'48.12"			
TC	22.545	325877.173	6260232.451	220°48'48.12"			
IP 6	24.833	325875.283	6260230.262		R = −2.950	4.576	88°52'22.37"
CT	27.121	325877.434	6260228.328	131°56'25.75"			
IP 7	31.946	325881.023	6260225.104				
IP 8	32.396	325881.324	6260225.438				
IP 9	37.560	325885.854	6260222.957	118°42'54.83"			

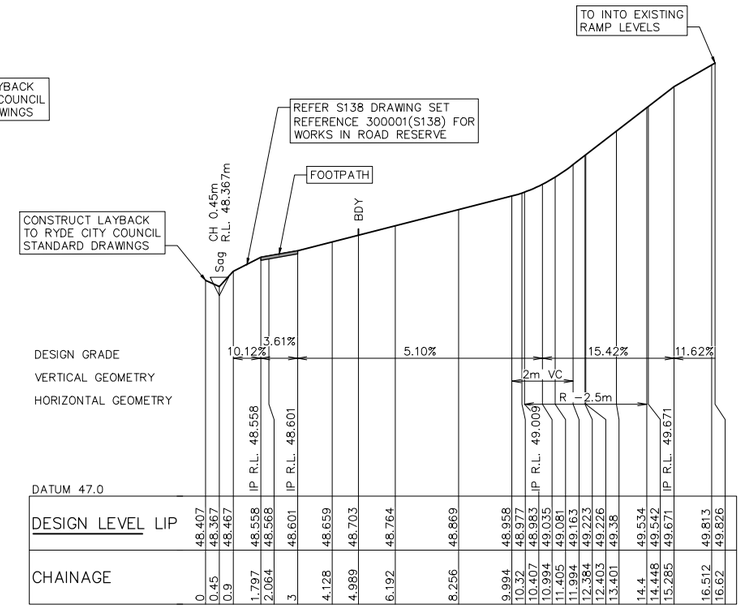

LONGITUDINAL SECTION KR103A

HORIZONTAL SCALE 1:100
VERTICAL SCALE 1:20

KR103A – SETOUT TABLE							
PT	CHAINAGE	EASTING	NORTHING	BEARING	RAD/SPIRAL	A.LENGTH	DEFL.ANGLE
IP 1	0.000	325881.026	6260217.640	311°56'25.75"			
TC	10.407	325873.285	6260224.596	311°56'25.75"			
IP 2	12.403	325871.376	6260226.311		R = −2.500	3.993	91°30'14.90"
CT	14.400	325869.711	6260224.357	220°26'10.84"			
IP 3	16.620	325868.271	6260222.668	220°26'10.84"			

These plans are referred to in certificate no. **16746** approved by:
Eric Hausfeld
Registered Certifier
Registration No: BDC 2416
Categories: Certifier – Subdivision; Certifier – Strata; Certifier – Stormwater; Certifier – Road & Drainage; Certifier – Hydraulic (stormwater)
Land Development Certificates
www.LDC.com.au

DIAL1100 BEFORE YOU DIG

CONSTRUCTION ISSUE

REV.	DATE	AMENDMENT	DESIGN	DRAWN	CHECKED	APPROVED
1	21.01.22	ISSUED FOR CONSTRUCTION	B.M.	J.J.	B.M.	B.M.

SCALES: A1 1:100 (0, 2.5, 5.0m) A3 1:200; A1 1:20 (0, 0.5, 1.0m) A3 1:40

DESIGN FILE S:\300001\DESIGN\12D\STAGE 2 CC\DESIGN FILE.project

ALL DIMENSIONS ARE IN METRES. DO NOT SCALE

adw Johnson
Central Coast
5 Pioneer Avenue,
P.O. Box 3717,
Tuggerah N.S.W. 2259
Phone: (02) 4305 4300
Fax: (02) 4305 4399
email: coast@adwjohnson.com.au
www.adwjohnson.com.au
ABN 62 129 445 398

CLIENT: FRASERS PROPERTY

PROPERTY DESCRIPTION: LOT 100 D.P.1262209 & LOT 1 D.P.859537
EPPING ROAD & LYONPARK ROAD,
MACQUARIE PARK
SSDA 8903

SURVEYED: ADW Johnson
DATUM: GDA94 M.G.A. ZONE 56 A.H.D.

PROJECT: PROPOSED SUBDIVISION

PLAN TITLE: KERB RETURN LONGITUDINAL SECTIONS KR103 & KR103A

PROJECT No.	DISCIPLINE	NUMBER	REV.
300001(2) –	ENG –	370	1

Plotted By: Ben Myles Plot Date: 21/01/22 2:31:15PM Cad File: S:\300001\DRAWINGS\ENGINEERING\CIVIL\STAGE 2 CC ENG\300001(2)-ENG-370.DWG

100mm AT FULL SIZE

This plan includes coloured information. If you have a black and white copy you do not have all of the information. This note is coloured RED.

300001(2)-ENG-371

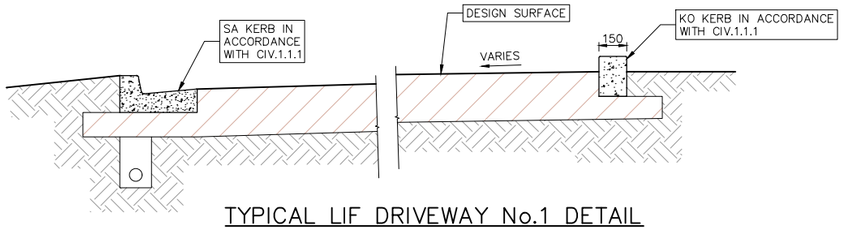

TYPICAL LIF DRIVEWAY No.1 DETAIL

NOT TO SCALE

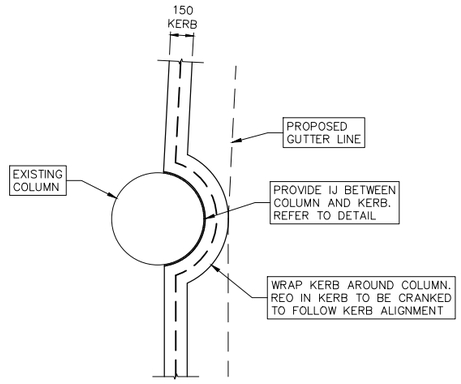

DETAIL 1

SCALE 1:20

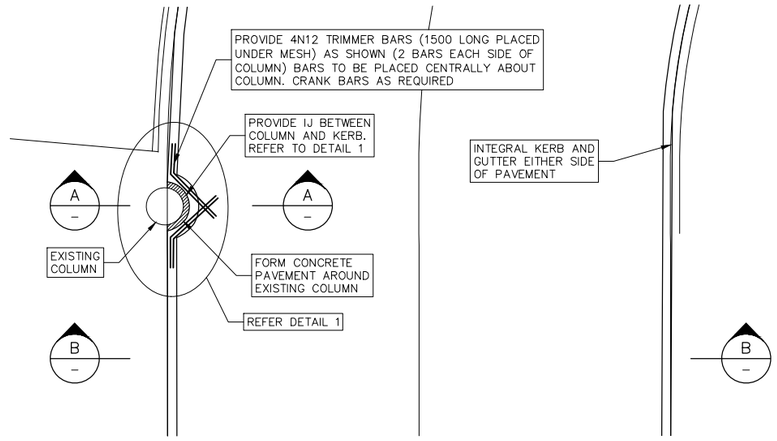

EXISTING COLUMN/DRIVEWAY DETAIL

SCALE 1:50

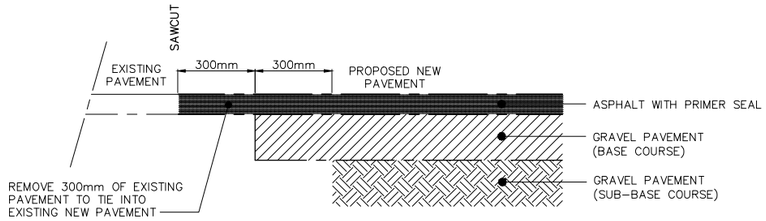

TYPICAL SAWCUT DETAIL

SCALE 1:10

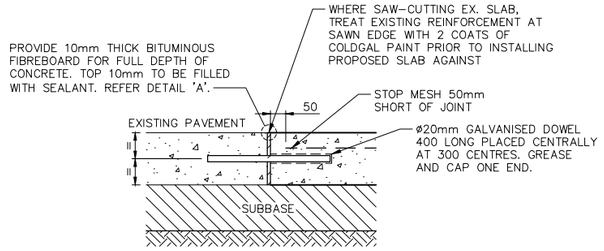

EXPANSION JOINT DETAIL (EJ)

SCALE 1:10

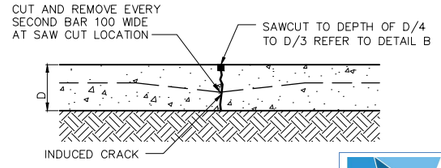

SAWN JOINT (SJ)

SCALE 1:10

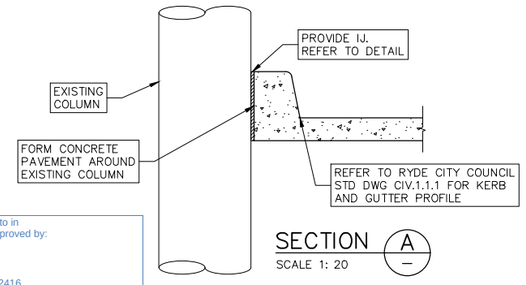

SECTION A

SCALE 1: 20

These plans are referred to in certificate no. **16746** approved by:
Eric Hausfeld
Registered Certifier
Registration No: BDC 2416
Categories: Certifier – Subdivision, Certifier – Strata, Certifier – Stormwater, Certifier – Road & Drainage, Certifier – Hydraulic (stormwater)
Land Development Certificates
www.LDC.com.au

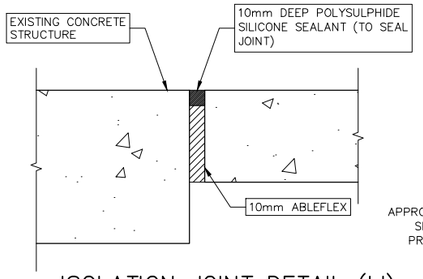

ISOLATION JOINT DETAIL (IJ)

NOT TO SCALE

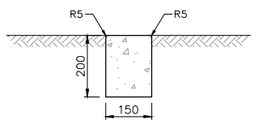

EDGE STRIP

NOT TO SCALE

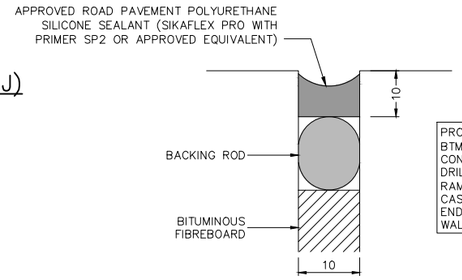

DETAIL 'A'

NOT TO SCALE

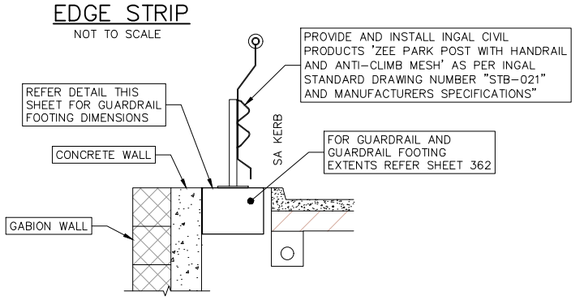

TYPICAL GUARDRAIL DETAIL

NOT TO SCALE

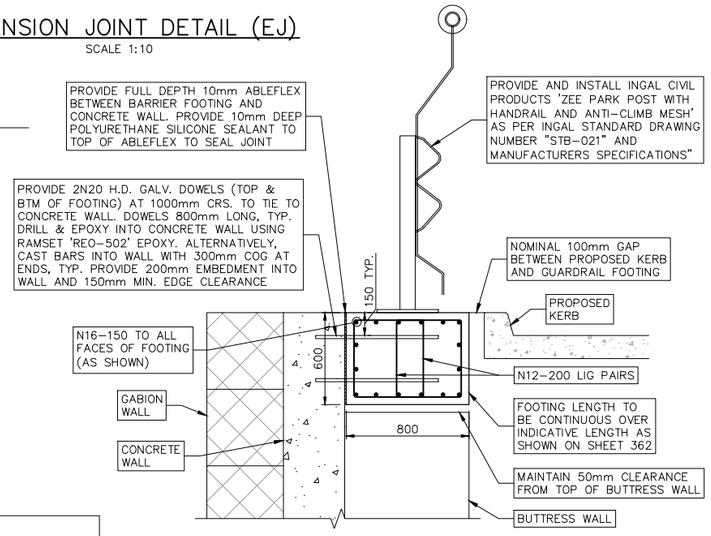

TYPICAL GUARDRAIL FOOTING DETAIL

SCALE 1:20

NOTE:

FOOTING TO EXTEND 500mm MIN. PAST OUTER GUARDRAIL POSTS. REFER SHEET 362 FOR EXTENTS, TYP.

TYPICAL GUARDRAIL FOOTING DETAILS:

- CONCRETE GRADE – 32MPa (80mm SLUMP, 20mm AGGREGATE GP CEMENT)
- CONCRETE COVER (CAST AGAINST GROUND) – 50mm
- CONCRETE COVER (EXPOSED TO ATMOSPHERE) – 40mm

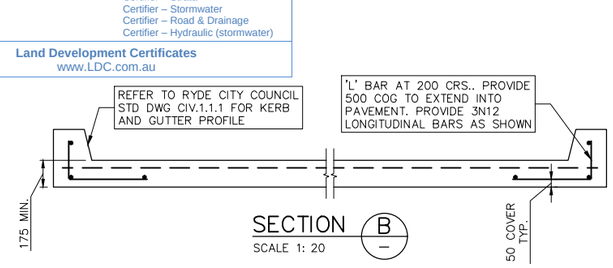

SECTION B

SCALE 1: 20

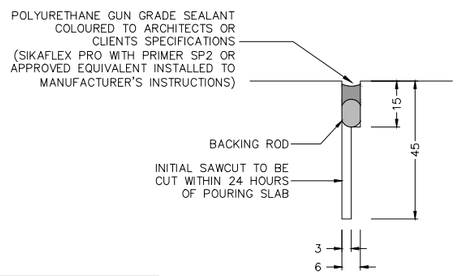

DETAIL 'B'

NOT TO SCALE

SAFETY BARRIER DESIGN LOADS NOTE:

THE 'ZEE-PARK' SAFETY BARRIER TO BE INSTALLED NEEDS TO BE DESIGNED AS A CARPARK BARRIER FOR MEDIUM VEHICLE TRAFFICABLE AREAS (MAX. 10 TONNE VEHICLES – HORIZ. IMPOSED ACTION = 40kN IN ACCORDANCE WITH SECTION 3.8 OF AS1170.1). THE MANUFACTURER SUPPLYING THE PRODUCT IS TO CONFIRM THAT THE PRODUCT SPECIFIED MEETS THIS DESIGN REQUIREMENT.

DIAL 1100 BEFORE YOU DIG

CONSTRUCTION ISSUE

REV.	DATE	AMENDMENT	DESIGN	DRAWN	CHECKED	APPROVED
1	21.01.22	ISSUED FOR CONSTRUCTION	B.M.	J.J.	B.M.	B.M.

SCALES: A1 1:50 (0, 1.25, 2.5 m) A3 1:100; A1 1:20 (0, 0.5, 1.0m) A3 1:40; A1 1:10 (0, 0.25, 0.5m) A3 1:20

ALL DIMENSIONS ARE IN METRES. DO NOT SCALE

adw Johnson
Central Coast
5 Pioneer Avenue,
P.O. Box 3717,
Tuggerah N.S.W. 2259
Phone: (02) 4305 4300
Fax: (02) 4305 4399
email: coast@adwjohnson.com.au
www.adwjohnson.com.au
ABN 62 129 445 398

CLIENT: FRASERS PROPERTY

PROPERTY DESCRIPTION: LOT 100 D.P.1262209 & LOT 1 D.P.859537, EPPING ROAD & LYONPARK ROAD, MACQUARIE PARK, SSDA 8903

SURVEYED: ADW Johnson | DATUM: GDA94 M.G.A. ZONE 56 A.H.D.

PROJECT: PROPOSED SUBDIVISION

PLAN TITLE: TYPICAL DETAILS & SECTIONS

PROJECT No. 300001(2) – DISCIPLINE ENG – NUMBER 371 | REV. 1

DESIGN FILE S:\300001\DESIGN\12D\STAGE 2 CC\DESIGN FILE.project

Plotted By: Ben Myles Plot Date: 21/01/22 2:31:20PM Cad File: S:\300001\DRAWINGS\ENGINEERING\CIVIL\STAGE 2 CC ENG\300001(2)-ENG-371.DWG

100mm AT FULL SIZE

This plan includes coloured information. If you have a black and white copy you do not have all of the information. This note is coloured RED.

300001(2)-ENG-401

GENERAL NOTES: –

1. FOR TYPICAL ROAD CROSS SECTIONS, KERB PROFILES REFER SHEET 201 & PAVEMENT DETAILS REFER TO SHEET 151.
2. SETOUT INFORMATION IS TO BE VERIFIED BY THE CONTRACTOR AGAINST THE PLAN VIEW, LONGITUDINAL SECTIONS AND ELECTRONIC 12D DATA BEFORE BEING USED. IF THERE IS A DISCREPANCY THE SUPERINTENDENT IS TO BE NOTIFIED AND DIRECTION TO BE PROVIDED IN WRITING BEFORE PROCEEDING.
3. FUTURE BUILDINGS FLOWS DIRECTLY INPUT TO PITS C2\1, C3\1, C4\1, D2\1 AND D3\1 FROM RAFTS MODEL. REFER TO DA SWMP PREPARED BY ADW JOHNSON AND CALC. CHARTS FOR DETAILS.

These plans are referred to in certificate no. **16746** approved by:
Eric Hausfeld
Registered Certifier
Registration No: BDC 2416
Categories: Certifier – Subdivision; Certifier – Strata; Certifier – Stormwater; Certifier – Road & Drainage; Certifier – Hydraulic (stormwater)
Land Development Certificates
www.LDC.com.au

MGA

LEGEND
- LIMIT OF WORKS BOUNDARY
- PROPOSED LOT BOUNDARY
- EXISTING LOT BOUNDARY
- MAJOR CONTOURS
- MINOR CONTOURS
- PROPOSED KERB
- EXISTING KERB
- EXTENTS OF BATTER
- CATCHMENT BOUNDARY
- SW — PROPOSED STORMWATER
- ex sw — EXISTING STORMWATER
- FSW — FUTURE STORMWATER
- TEMPORARY BERM
- PROPOSED SW PIT
- PROPOSED LINTEL
- PROPOSED HEADWALL
- 1\1 PIT LABEL
- 1\1 EXISTING PIT LABEL

CONTOUR INTERVAL = 0.5m

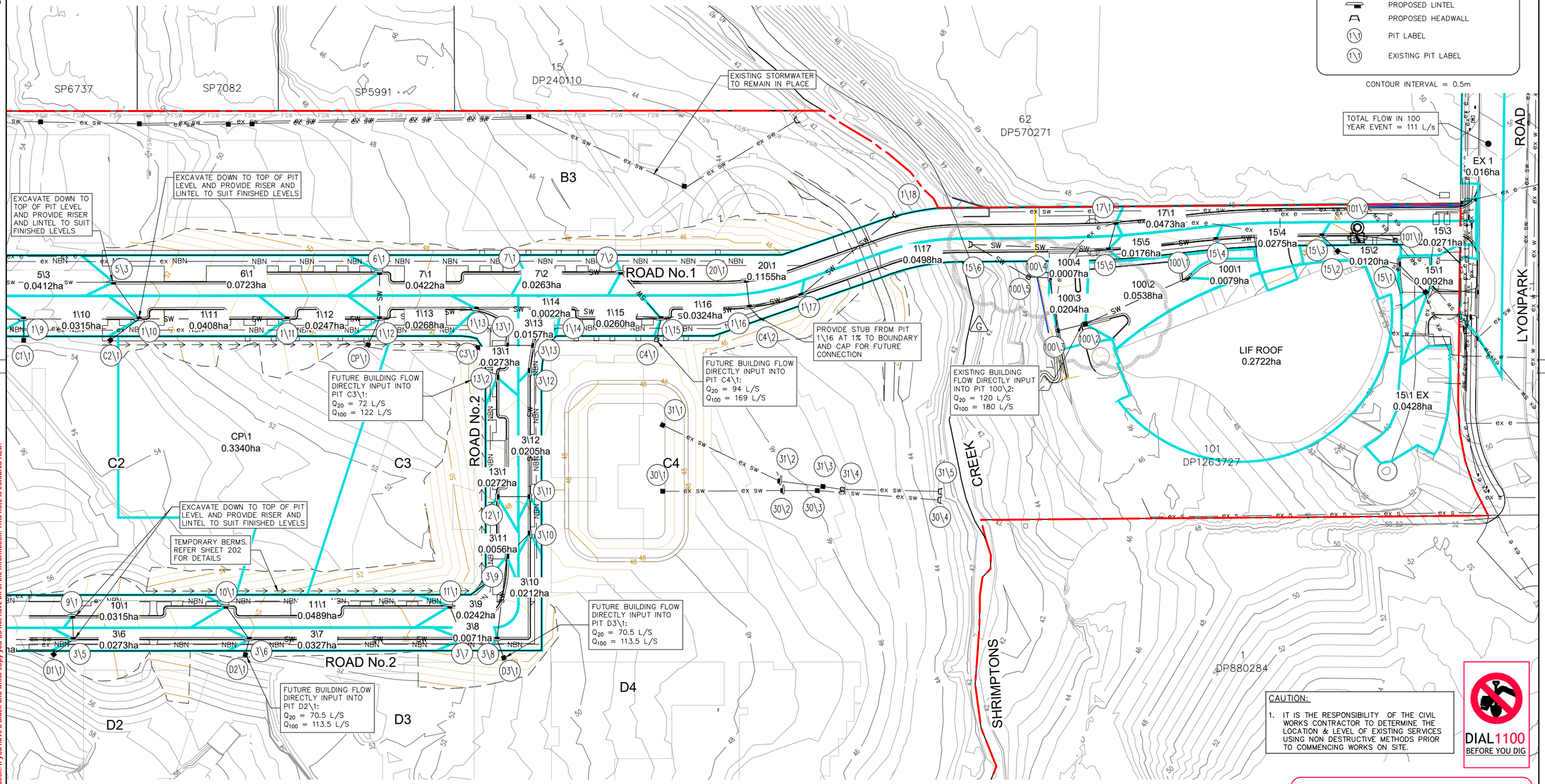

CAUTION:
1. IT IS THE RESPONSIBILITY OF THE CIVIL WORKS CONTRACTOR TO DETERMINE THE LOCATION & LEVEL OF EXISTING SERVICES USING NON DESTRUCTIVE METHODS PRIOR TO COMMENCING WORKS ON SITE.

DIAL 1100 BEFORE YOU DIG

STORMWATER CATCHMENT PLAN

SCALE 1:500

CONSTRUCTION ISSUE

REV.	DATE	AMENDMENT	DESIGN	DRAWN	CHECKED	APPROVED
1	21.01.22	ISSUED FOR CONSTRUCTION	B.M.	J.J.	B.M.	B.M.

DESIGN FILE S:\300001\DESIGN\12D\STAGE 2 CC\DESIGN FILE.project

SCALES: A1 1:500 (0, 12.5, 25.0m) A3 1:1000

ALL DIMENSIONS ARE IN METRES. DO NOT SCALE

adw Johnson
Central Coast
5 Pioneer Avenue,
P.O. Box 3717,
Tuggerah N.S.W. 2259
Phone: (02) 4305 4300
Fax: (02) 4305 4399
email: coast@adwjohnson.com.au
www.adwjohnson.com.au
ABN 62 129 445 398

CLIENT: FRASERS PROPERTY

PROPERTY DESCRIPTION: LOT 100 D.P.1262209 & LOT 1 D.P.859537, EPPING ROAD & LYONPARK ROAD, MACQUARIE PARK, SSDA 8903

SURVEYED: ADW Johnson
DATUM: GDA94 M.G.A. ZONE 56 A.H.D.

PROJECT: PROPOSED SUBDIVISION
PLAN TITLE: STORMWATER CATCHMENT PLAN

PROJECT No.	DISCIPLINE	NUMBER	REV.
300001(2) –	ENG –	401	1

Plotted By: Ben Myles Plot Date: 21/01/22 2:31:30PM Cad File: S:\300001\DRAWINGS\ENGINEERING\CIVIL\STAGE 2 CC ENG\300001(2)-ENG-401.DWG

100mm AT FULL SIZE

This plan includes coloured information. If you have a black and white copy you do not have all of the information. This note is coloured RED.

300001(2)-ENG-411

STORMWATER SETOUT			
PIT NAME	PIT TYPE	EASTING	NORTHING
		m	m
1\1	1.8m LINTEL	325526.5	6260581.128
1\2	1.8m LINTEL	325519.789	6260572.772
1\3	1.8m LINTEL	325524.011	6260556.871
1\4	1.8m LINTEL	325527.843	6260540.363
1\5	1.8m LINTEL	325542.088	6260526.612
1\6	1.8m LINTEL	325539.014	6260519.544
1\7	1.8m LINTEL	325566.432	6260495.349
1\8	1.8m LINTEL	325578.784	6260481.221
1\9	1.8m LINTEL	325596.857	6260465.409
1\10	1.8m LINTEL (CUSTOM PIT)	325619.37	6260445.713
1\11	1.8m LINTEL	325648.216	6260420.476
1\12	1.8m LINTEL	325666.28	6260404.672
1\13	1.8m LINTEL	325686.503	6260389.795
1\14	1.8m LINTEL (CUSTOM PIT)	325703.326	6260375.583
1\15	1.8m LINTEL (CUSTOM PIT)	325721.158	6260356.661
1\16	2.4m LINTEL SAG (CUSTOM PIT)	325740.346	6260343.779
1\17	1.8m LINTEL (CUSTOM PIT)	325752.48	6260337.269
1\18	HEADWALL OUTLET	325783.977	6260336.887
3\1	900 x 900 GSIP	325471.604	6260457.855
3\2	1.8m LINTEL	325480.356	6260457.052
3\3	1.8m LINTEL	325499.773	6260440.064
3\4	1.8m LINTEL	325527.657	6260415.668
3\5	1.8m LINTEL	325551.836	6260394.514
3\6	1.8m LINTEL	325586.146	6260364.496
3\7	1.8m LINTEL	325627.755	6260328.092
3\8	1.2m LINTEL	325634.491	6260322.198
3\9	1.8m LINTEL (CUSTOM PIT)	325650.523	6260336.675
3\10	1.8m LINTEL (CUSTOM PIT)	325658.99	6260337.24
3\11	1.8m LINTEL (CUSTOM PIT)	325665.2	6260344.338
3\12	1.8m LINTEL (CUSTOM PIT)	325686.757	6260368.912
3\13	2.4m LINTEL SAG (CUSTOM PIT)	325691.718	6260373.144
6\1	1.8m LINTEL	325674.181	6260413.704
1\12	1.8m LINTEL	325666.28	6260404.672
7\1	1.8m LINTEL	325702.365	6260389.042
7\2	1.8m LINTEL	325721.215	6260372.553
10\1	1.8m LINTEL	325587.18	6260374.885
11\1	1.8m LINTEL	325630.856	6260336.674
12\1	1.8m LINTEL	325658.803	6260349.935
13\1	1.8m LINTEL	325679.167	6260373.195
13\2	2.4m LINTEL SAG	325686.532	6260377.832
15\1 EX	900 x 900 GSIP	325874.713	6260231.199
15\1	2.4m LINTEL SAG	325874.259	6260241.271
15\2	900 x 900 GSIP	325864.563	6260254.225
15\3	1.8m LINTEL	325864.144	6260259.942
15\4	1.8m LINTEL	325842.835	6260277.303
15\5	1.8m LINTEL	325820.092	6260293.644
15\6	HW OUT	325794.535	6260317.883
17\1	1.8m LINTEL	325826.278	6260297.705
19\1	1.8m LINTEL	325853.386	6260278.087
20\1	2.4m LINTEL SAG	325744.304	6260349.553
100\1	1.8m LINTEL	325830.769	6260274.678
100\2	900 x 900 VGRATE	325802.891	6260283.152
100\3	2.4m LINTEL SAG	325796.339	6260286.568
100\4	1.8m LINTEL	325803.852	6260298.254
100\5	900 x 900 JUNCTION	325799.864	6260301.971
15\6	HW OUT	325794.521	6260317.849
101\1	900 x 900 JUNCTION	325877.656	6260246.531
101\2	900 x 900 JUNCTION	325870.985	6260254.047
C2\1	900 x 900 GSIP	325610.153	6260446.469
C3\1	900 x 900 GSIP	325680.522	6260382.256
C4-2\1	2.4m LINTEL SAG	325740.346	6260343.768
CP\1	900 x 900 GSIP	325659.577	6260401.568
D2\1	900 x 900 GSIP	325582.76	6260362.144
D3\1	900 x 900 GSIP	325632.595	6260317.398

LDC

These plans are referred to in certificate no. **16746** approved by:

Eric Hausfeld
Registered Certifier

Registration No: BDC 2416

Categories: Certifier – Subdivision
Certifier – Strata
Certifier – Stormwater
Certifier – Road & Drainage
Certifier – Hydraulic (stormwater)

Land Development Certificates
www.LDC.com.au

DIAL 1100 BEFORE YOU DIG

CONSTRUCTION ISSUE

REV.	DATE	AMENDMENT	DESIGN	DRAWN	CHECKED	APPROVED
1	21.01.22	ISSUED FOR CONSTRUCTION	B.M.	J.J.	B.M.	B.M.

SCALES

DESIGN FILE S:\300001\DESIGN\12D\STAGE 2 CC\DESIGN FILE.project

ALL DIMENSIONS ARE IN METRES. DO NOT SCALE

adw Johnson
Central Coast
5 Pioneer Avenue,
P.O. Box 3717,
Tuggerah N.S.W. 2259
Phone: (02) 4305 4300
Fax: (02) 4305 4399
email: coast@adwjohnson.com.au
www.adwjohnson.com.au
ABN 62 129 445 398

CLIENT

FRASERS PROPERTY

PROPERTY DESCRIPTION

LOT 100 D.P.1262209 & LOT 1 D.P.859537
EPPING ROAD & LYONPARK ROAD,
MACQUARIE PARK
SSDA 8903

SURVEYED: ADW Johnson

DATUM: GDA94 M.G.A. ZONE 56 A.H.D.

PROJECT: PROPOSED SUBDIVISION

PLAN TITLE: STORMWATER SETOUT TABLE & DETAILS

PROJECT No.	DISCIPLINE	NUMBER	REV.
300001(2) –	ENG –	411	1

Plotted By: Ben Myles Plot Date: 21/01/22 2:31:34PM Cad File: S:\300001\DRAWINGS\ENGINEERING\CIVIL\STAGE 2 CC ENG\300001(2)-ENG-411.DWG

100mm AT FULL SIZE

This plan includes coloured information. If you have a black and white copy you do not have all of the information. This note is coloured RED.

300001(2)-ENG-421

20 YEAR HYDROLOGICAL DESIGN

PIT NAME	PIT DETAILS	AREA ha	IMPER. %	PER. %	tc IMPER. min	tc PER. min	INTENSITY mm/hr	RUNOFF C IMPER.	RUNOFF C PER.	CRITICAL SUM CA	CATCHMENT FLOW L/s	BYPASS ARRIVING L/s	TOTAL FLOW @ PIT L/s	PIT INLET FLOW L/s	PIT BYPASS FLOW L/s	BYPASS PIT	Ku	GUTTER SLOPE %	FLOODED DEPTH m	FLOW WIDTH m	VELOCITYx DEPTH	MAX POND DEPTH m	CHOKE FACTOR 1=NONE	NOTES
1\1	1.8m LINTEL	0.052	90	10	5	5	195	0.945	0.5362	0.047	25	0	25	25	0	18\2	3.6	11.9	0.05	0.79	0.08		1	
1\2	1.8m LINTEL	0.0686	90	10	5	5	195	0.945	0.5362	0.062	34	0	34	33	1	1\3	2.8	14.5	0.05	0.85	0.1		1	
1\3	1.8m LINTEL	0.0173	90	10	5	5	195	0.945	0.5362	0.016	8	1	9	9	0	1\4	0.8	13	0.03	0.38	0.05		1	
1\4	1.8m LINTEL	0.0118	90	10	5	5	195	0.945	0.5362	0.011	6	0	6	6	0	2\5	0.8	10.1	0.03	0.33	0.03		1	
1\5	1.8m LINTEL	0.0299	90	10	5	5	195	0.945	0.5362	0.027	15	0	15	15	0	4\1	1.7	6.2	0.05	0.75	0.05		1	
1\6	1.8m LINTEL	0.0249	90	10	5	5	195	0.945	0.5362	0.023	12	0	12	12	0	1\7	0.6	5	0.05	0.72	0.04		1	
1\7	1.8m LINTEL	0.0368	90	10	5	5	195	0.945	0.5362	0.033	18	0	18	18	0	1\8	0.4	5	0.05	0.94	0.05		1	
1\8	1.8m LINTEL	0.0205	90	10	5	5	195	0.945	0.5362	0.019	10	0	10	10	0	1\9	0.4	4.9	0.04	0.59	0.04		1	
1\9	1.8m LINTEL	0.025	90	10	5	5	195	0.945	0.5362	0.023	12	0	12	12	0	1\10	0.4	3.3	0.05	0.85	0.04		1	
1\10	1.8m LINTEL	0.0315	90	10	5	5	195	0.945	0.5362	0.028	15	0	15	15	0	1\11	1.7	3.9	0.05	0.91	0.05		1	
1\11	1.8m LINTEL	0.0408	90	10	5	5	195	0.945	0.5362	0.037	20	0	20	20	0	1\12	0.3	5.7	0.05	0.98	0.06		1	
1\12	1.8m LINTEL	0.0247	90	10	5	5	195	0.945	0.5362	0.022	12	0	12	12	0	1\13	0.9	7.1	0.04	0.54	0.05		1	
1\13	1.8m LINTEL	0.0268	90	10	5	5	195	0.945	0.5362	0.024	13	0	13	13	0		0	5	0.05	0.49	0.05		1	
1\14	1.8m LINTEL	0.0022	50	50	5	5	195	0.945	0.5362	0.002	1	0	1	1	0	1\15	0.4	0.8	0.02	0.27	0.01		1	
1\15	1.8m LINTEL	0.026	90	10	5	5	195	0.945	0.5362	0.024	13	0	13	13	0	1\16	0.4	0.8	0.06	1.35	0.03		1	
1\16	2.4m LINTEL SAG	0.0324	90	10	5	5	195	0.945	0.5362	0.029	16	0	16	16	0	20\1	0.2	0.1	0.03			0.12	1	
1\17	1.8m LINTEL	0.0498	90	10	5	5	195	0.945	0.5362	0.045	24	0	24	24	0	C4-2\1	0.6	0.8	0.07	1.85	0.04		1	
1\18	HEADWALL OUTLET		90		5	5						0												
3\1	900 x 900 GSIP		90	10	5	5	0			0	0	0	0	0	0		0						1	
3\2	1.8m LINTEL	0.0067	90	10	5	5	195	0.945	0.5362	0.006	3	0	3	3	0	3\3	0.7	1.8	0.03	0.36	0.02		1	
3\3	1.8m LINTEL	0.0152	90	10	5	5	195	0.945	0.5362	0.014	7	0	7	7	0	3\4	0.6	6.9	0.03	0.39	0.04		1	
3\4	1.8m LINTEL	0.0219	90	10	5	5	195	0.945	0.5362	0.02	11	0	11	11	0	3\5	0.7	6.9	0.04	0.45	0.05		1	
3\5	1.8m LINTEL	0.0193	90	10	5	5	195	0.945	0.5362	0.017	9	0	9	9	0	3\6	0.6	6.5	0.04	0.43	0.04		1	
3\6	1.8m LINTEL	0.0273	90	10	5	5	195	0.945	0.5362	0.025	13	0	13	13	0	3\7	0.4	5	0.05	0.75	0.05		1	
3\7	1.8m LINTEL	0.0327	90	10	5	5	195	0.945	0.5362	0.03	16	0	16	16	0	3\8	0.4	3.3	0.05	1.02	0.04		1	
3\8	1.2m LINTEL	0.0071	90	10	5	5	195	0.945	0.5362	0.006	3	0	3	3	0	3\10	1.6	2.1	0.03	0.36	0.02		1	
3\9	1.8m LINTEL	0.0242	90	10	5	5	195	0.945	0.5362	0.022	12	0	12	12	0	12\1	0.6	3.7	0.05	0.79	0.04		1	
3\10	1.8m LINTEL	0.0212	90	10	5	5	195	0.945	0.5362	0.019	10	0	10	10	0	3\11	0.6	4	0.04	0.64	0.04		1	
3\11	1.8m LINTEL	0.0056	90	10	5	5	195	0.945	0.5362	0.005	3	0	3	3	0	3\12	0.6	4.3	0.03	0.3	0.02		1	
3\12	1.8m LINTEL	0.0205	90	10	5	5	195	0.945	0.5362	0.019	10	0	10	10	0	3\13	0.3	2	0.05	0.97	0.03		1	
3\13	2.4m LINTEL SAG	0.0157	90	10	5	5	195	0.945	0.5362	0.014	8	0	8	8	0	1\14	0.5	0.5	0.02			0.05	1	
6\1	1.8m LINTEL	0.0723	90	10	5	5	195	0.945	0.5362	0.065	35	1	36	35	1	7\1	3.6	7.1	0.06	1.35	0.08		1	
7\1	1.8m LINTEL	0.0422	90	10	5	5	195	0.945	0.5362	0.038	21	0	21	21	0	7\2	3.6	1.3	0.07	1.62	0.04		1	
7\2	1.8m LINTEL	0.0263	90	10	5	5	195	0.945	0.5362	0.024	13	0	13	13	0	20\1	1.9	0.8	0.06	1.32	0.03		1	
10\1	1.8m LINTEL	0.0315	90	10	5	5	195	0.945	0.5362	0.029	15	0	15	15	0	11\1	3.6	5	0.05	0.88	0.05		1	
11\1	1.8m LINTEL	0.0489	90	10	5	5	195	0.945	0.5362	0.044	24	0	24	24	0	3\9	3.6	3.5	0.06	1.27	0.05		1	
12\1	1.8m LINTEL	0.0128	90	10	5	5	195	0.945	0.5362	0.012	6	0	6	6	0	13\1	3.6	4.4	0.03	0.4	0.03		1	
13\1	1.8m LINTEL	0.0272	90	10	5	5	195	0.945	0.5362	0.025	13	0	13	13	0	13\2	3.6	2.3	0.05	1.08	0.04		1	
13\2	2.4m LINTEL SAG	0.0273	90	10	5	5	195	0.945	0.5362	0.025	13	0	13	13	0	3\13	0.9	0.5	0.02			0.06	1	
15\1 EX	900 x 900 GSIP	0.0428	90	10	5	5	195	0.945	0.5362	0.039	21	0	21	21	0		3.6						1	
15\1	2.4m LINTEL SAG	0.0092	90	10	5	5	195	0.945	0.5362	0.008	4	0	4	4	0		1.2	3.6	0.01			0.15	1	
15\2	900 x 900 GSIP	0.012	50	50	5	5	195	0.945	0.5362	0.009	5	0	5	5	0		0.6	1					1	
15\3	1.8m LINTEL	0.0271	90	10	5	5	195	0.945	0.5362	0.024	13	0	13	13	0	15\4	0.6	1.4	0.06	1.18	0.03		1	
15\4	1.8m LINTEL	0.0275	90	10	5	5	195	0.945	0.5362	0.025	13	0	13	13	0	15\5	0.3	1					1	
15\5	1.8m LINTEL	0.0176	90	10	5	5	195	0.945	0.5362	0.016	9	0	9	9	0	1\17	1.5	0.9	0.05	1.02	0.02		1	
15\6	HW OUT		90		5	5						0												
17\1	1.8m LINTEL	0.0473	90	10	5	5	195	0.945	0.5362	0.043	23	0	23	23	0	20\1	3.6	0.9	0.07	1.7	0.04		1	
20\1	2.4m LINTEL SAG	0.1155	90	10	5	5	195	0.945	0.5362	0.104	57	0	57	57	0		3.6	0.1	0.06			0.12	1	
100\1	1.8m LINTEL	0.0079	100	0	5	5	195	0.945	0	0.007	4	0	4	4	0	100\2	3.6	4	0.03	0.37	0.02	0	1	0
100\2	900 x 900 VGRATE	0.0538	80	20	5	5	195	0.945	0.5362	0.046	25	0	25	24	1	100\3	2	1.8	0.05	1.95	0.03	0	1	0
100\3	2.4m LINTEL SAG	0.0204	95	5	5	5	195	0.945	0.5362	0.019	10	1	11	11	0	0	2.1	2.3	0.02	0	0	0.15	1	0
100\4	1.8m LINTEL	0.0007	90	10	5	5	195	0.945	0.5362	0.001	0	0	0	0	0	0	2.1	5.8	0	0	0	0	1	0
100\5	900 x 900 JUNCTION	0	90	10	5	5	0	0	0	0	0	0	0	0	0	0	2.1	0	0	0	0	0	1	0
15\6	HW OUT		90		5	5						0												
101\1	900 x 900 JUNCTION		90	10	5	5	0			0	0	0	0	0	0		0						1	
101\2	900 x 900 JUNCTION		90	10	5	5	0			0	0	0	0	0	0		0.2	1.4					1	
C2\1	900 x 900 GSIP		90	10	5	5	0			0	0	0	0	0	0		0						1	
C3\1	900 x 900 GSIP		90	10	5	5	0			0	0	0	0	0	0		0						1	
C4\1	900 x 900 JUNCTION		90	10	5	5	0			0	0	0	0	0	0		0						1	
CP\1	900 x 900 GSIP	0.334	10	90	5	8	165	0.945	0.5362	0.193	88	0	88	88	0		4.1						1	
D2\1	900 x 900 GSIP		90	10	5	5	0			0	0	0	0	0	0		0						1	
D3\1	900 x 900 GSIP		90	10	5	5	0			0	0	0	0	0	0		0						1	

20 YEAR HYDRAULIC DESIGN

REACH	TYPE	LENGTH m	DIA. mm	U/S IL m	D/S IL m	PIPE GRADE %	PIPE FLOW L/s	PIPE VELOCITY m/s	U/S HGL m	D/S HGL m	GRADE HGL %	U/S PIT Ku
1\1 to 1\2	RCP CLASS 4	10.7	375	62.09	61.13	9	25	2.9	62.2	61.31	8.35	3.6
1\2 to 1\3	RCP CLASS 4	16.5	375	61.1	59.29	11	58	4	61.27	59.36	11.63	2.8
1\3 to 1\4	RCP CLASS 4	16.9	375	59.1	56.9	13	88	4.8	59.32	57.11	13.01	0.8
1\4 to 1\5	RCP CLASS 4	19.8	375	56.86	55.67	6	93	3.7	57.09	55.96	5.68	0.8
1\5 to 1\6	RCP CLASS 4	7.7	375	55.64	55.36	3.62	106	3.2	55.88	55.87	0.08	1.7
1\6 to 1\7	RCP CLASS 4	36.6	450	55.28	53.46	5	378	4.9	55.7	53.99	4.66	0.6
1\7 to 1\8	RCP CLASS 4	18.8	450	53.42	52.48	5	409	5	53.84	52.71	6.02	0.4
1\8 to 1\9	RCP CLASS 4	24	450	52.13	51.23	3.75	417	4.5	52.56	51.79	3.2	0.4
1\9 to 1\10	RCP CLASS 4	29.9	525	51.16	50.34	2.75	574	4.3	51.64	50.65	3.33	0.4
1\10 to 1\11	RCP CLASS 4	38.3	525	48.17	47.79	1	703	3.2	48.96	48.58	1	1.7
1\11 to 1\12	RCP CLASS 4	24	525	47.75	47.27	2	716	3.9	48.39	47.95	1.86	0.3
1\12 to 1\13	RCP CLASS 4	25.1	525	46.76	45.53	4.87	837	5.8	47.27	46.06	4.82	0.9
1\13 to 1\14	RCP CLASS 4	22	600	45.5	45.23	1.21	845	3.2	46.06	45.75	1.4	0
1\14 to 1\15	RCP CLASS 4	26	900	44.5	44.24	1	1451	3.6	45.22	44.88	1.3	0.4
1\15 to 1\16	RCP CLASS 4	23.1	1050	44.09	43.86	1	1579	3.7	44.81	44.72	0.39	0.4
1\16 to 1\17	RCP CLASS 4	13.8	1200	43.71	43.57	1	1635	3.7	44.7	44.71	-0.07	0.2
1\17 to 1\18	RCP CLASS 4	31.5	1200	41.77	41.46	1	1650	3.7	44.64	44.6	0.14	0.6
												0.6
3\1 to 3\2	RCP CLASS 4	8.8	375	59.59	59.24	4	70	2.9	59.79	59.42	4.15	0
3\2 to 3\3	RCP CLASS 4	25.8	375	59.21	57.85	5.25	73	3.3	59.4	58.04	5.28	0.7
3\3 to 3\4	RCP CLASS 4	37.1	375	57.82	55.31	6.77	81	3.7	58.02	55.56	6.65	0.6
3\4 to 3\5	RCP CLASS 4	32.1	375	55.27	53.19	6.5	114	4	55.52	53.42	6.56	0.7
3\5 to 3\6	RCP CLASS 4	45.6	375	52.89	50.61	5	274	4.5	53.24	50.95	5.02	0.6
3\6 to 3\7	RCP CLASS 4	55.3	450	50.42	47.66	5	370	4.9	50.84	48.39	4.43	0.4
3\7 to 3\8	RCP CLASS 4	9	450	47.62	47.36	3	404	4.1	48.26	48.14	1.34	0.4
3\8 to 3\9	RCP CLASS 4	21.6	525	47.28	46.74	2.5	478	4	47.74	47.32	1.93	1.6
3\9 to 3\10	RCP CLASS 4	8.5	525	46.71	46.49	2.5	488	4	47.17	46.98	2.28	0.6
3\10 to 3\11	RCP CLASS 4	9.4	600	46.42	46.18	2.5	496	4	46.88	46.71	1.8	0.6
3\11 to 3\12	RCP CLASS 4	32.7	600	46.15	45.33	2.5	504	4	46.61	45.82	2.43	0.6
3\12 to 3\13	RCP CLASS 4	6.5	600	45.3	45.13	2.5	511	4	45.76	45.43	5.16	0.3
3\13 to 1\14	RCP CLASS 4	11.9	675	44.85	44.73	1	614	3	45.35	45.32	0.21	0.5
												1.7
6\1 to 1\12	RCP CLASS 4	12	375	47.34	47.22	1	35	1.5	47.95	47.95	0.03	3.6
												0.9
7\1 to 7\2	RCP CLASS 4	25	375	44.93	44.68	1	21	1.3	45.04	44.88	0.61	3.6
7\2 to 1\15	RCP CLASS 4	15.9	375	44.65	44.49	1	34	1.4	44.88	44.88	-0.02	1.9
												0.6
10\1 to 3\6	RCP CLASS 4	10.4	375	50.8	50.61	1.85	15	1.4	50.95	50.95	-0.04	3.6
												0.4
11\1 to 3\7	RCP CLASS 4	9.1	375	48.06	47.97	1	24	1.3	48.39	48.39	0	3.6
												0.4
12\1 to 3\11	RCP CLASS 4	8.5	375	46.57	46.49	1	6	0.9	46.71	46.71	-0.01	3.6
												0.6
13\1 to 13\2	RCP CLASS 4	8.7	375	45.59	45.5	1	13	1.1	45.67	45.56	1.22	3.6
13\2 to 3\13	RCP CLASS 4	7	375	44.95	44.88	1	99	1.9	45.44	45.43	0.21	0.9
												1.6
15\1 EX to 15\1	RCP CLASS 4	10.1	375	47.2	46.92	2.72	21	1.8	47.3	47.01	2.93	3.6
15\1 to 15\2	RCP CLASS 4	16.2	375	46.89	46.73	1	25	1.3	47	46.82	1.14	1.2
15\2 to 15\3	RCP CLASS 4	5.7	375	46.69	46.64	1	30	1.4	46.82	46.73	1.53	0.6
15\3 to 15\4	RCP CLASS 4	27.5	525	44.02	43.75	1	573	2.6	45.99	45.66	1.2	0.6
15\4 to 15\5	RCP CLASS 4	28	525	43.72	43.44	1	585	2.7	45.56	45.21	1.25	0.3
15\5 to 15\6	RCP CLASS 4	35.2	525	42.59	41.47	3.18	614	4.6	44.58	44.1	1.37	1.5
17\1 to 15\5	RCP CLASS 4	7.4	375	46.08	46	1	23	1.3	46.19	46.09	1.36	3.6
												0.8
19\1 to 15\4	RCP CLASS 4	10.6	375	46.41	46.3	1	12	1.1	46.65	46.65	0	3.6
												0.3
20\1 to 1\16	RCP CLASS 4	7	375	45.28	45.21	1	56	1.7	45.45	45.34	1.6	3.6
100\1 to 100\2	RCP CLASS 4	29.1	375	45.17	44.87	1	4	0.8	45.46	45.46	0	3.6
100\2 to 100\3	RCP CLASS 4	7.4	375	44.84	44.77	1	148	2.1	45.28	45.24	0.47	2
100\3 to 100\4	RCP CLASS 4	13.9	375	44.73	44.31	3	159	3.3	45.02	44.48	3.89	2.1
100\4 to 100\5	RCP CLASS 4	5.5	375	42.69	42.63	1	159	2.1	42.98	42.87	1.98	2.1
100\5 to 15\6	RCP CLASS 4	16.8	375	42.14	41.47	4	159	3.6	42.43	41.63	4.82	2.1
101\1 to 101\2	RCP CLASS 4	10	525	44.27	44.17	1	530	2.7	46.47	46.36	1.03	0
101\2 to 15\3	RCP CLASS 4	9	525	44.14	44.05	1	530	2.7	46.3	46.2	1.03	0.2
												0.6
C2\1 to 1\10	RCP CLASS 4	9.2	375	48.3	48.21	1	72	1.8	49.47	49.46	0.12	0
												1.7
C3\1 to 13\2	RCP CLASS 4	7.5	375	45.06	44.99	1	72	1.8	45.49	45.48	0.12	0
												0.9
C4\1 to 1\15	RCP CLASS 4	5.6	375	44.8	44.74	1	94	1.9	45.03	44.92	1.93	0
												0.4
CP\1 to 1\12	RCP CLASS 4	7.4	375	47.22	47.14	1	88	1.9	47.96	47.95	0.17	4.1
												0.9
												0.6
D2\1 to 3\6	RCP CLASS 4	4.1	375	50.5	50.46	1	71	1.8	50.96	50.95	0.11	0
												0.4
D3\1 to 3\8	RCP CLASS 4	5.2	375	47.41	47.36	1	71	1.8	48.15	48.14	0.11	0

These plans are referred to in certificate no. **16746** approved by:

Eric Hausfeld
Registered Certifier

Registration No: BDC 2416
Categories: Certifier – Subdivision
Certifier – Strata
Certifier – Stormwater
Certifier – Road & Drainage
Certifier – Hydraulic (stormwater)

Land Development Certificates
www.LDC.com.au

DIAL 1100 BEFORE YOU DIG

CONSTRUCTION ISSUE

REV.	DATE	AMENDMENT	DESIGN	DRAWN	CHECKED	APPROVED
1	21.01.22	ISSUED FOR CONSTRUCTION	B.M.	J.J.	B.M.	B.M.

SCALES

DESIGN FILE S:\300001\DESIGN\12D\STAGE 2 CC\DESIGN FILE.project

ALL DIMENSIONS ARE IN METRES. DO NOT SCALE

adw Johnson
Central Coast
5 Pioneer Avenue,
P.O. Box 3717,
Tuggerah N.S.W. 2259
Phone: (02) 4305 4300
Fax: (02) 4305 4399
email: coast@adwjohnson.com.au
www.adwjohnson.com.au
ABN 62 129 445 398

CLIENT

FRASERS PROPERTY

PROPERTY DESCRIPTION

LOT 100 D.P.1262209 & LOT 1 D.P.859537
EPPING ROAD & LYONPARK ROAD,
MACQUARIE PARK
SSDA 8903

SURVEYED: ADW Johnson
DATUM: GDA94 M.G.A. ZONE 56 A.H.D.

PROJECT: PROPOSED SUBDIVISION

PLAN TITLE: STORMWATER CALCULATION CHARTS
20 YEAR A.R.I.

PROJECT No. 300001(2) – DISCIPLINE ENG – NUMBER 421 REV. 1

Plotted By: Ben Myles Plot Date: 21/01/22 2:31:39PM Cad File: S:\300001\DRAWINGS\ENGINEERING\CIVIL\STAGE 2 CC ENG\300001(2)-ENG-421.DWG

100mm AT FULL SIZE

This plan includes coloured information. If you have a black and white copy you do not have all of the information. This note is coloured RED.

300001(2)-ENG-422

100mm AT FULL SIZE

This plan includes coloured information. If you have a black and white copy you do not have all of the information. This note is coloured RED.

100 YEAR HYDROLOGICAL DESIGN

PIT NAME	PIT DETAILS	AREA ha	IMPER. %	PER. %	tc IMPER. min	tc PER. min	INTENSITY mm/hr	RUNOFF C IMPER.	RUNOFF C PER.	CRITICAL SUM CA	CATCHMENT FLOW L/s	BYPASS ARRIVING L/s	TOTAL FLOW @ PIT L/s	PIT IN LET L/s	PIT BYPASS L/s	BYPASS PIT	Ku	GUTTER SLOPE %	FLOODED DEPTH m	FLOW WIDTH m	VELOCITYx DEPTH	MAX POND DEPTH m	CHOKE FACTOR 1=NONE	NOTES
1\1	1.8m LINTEL	0.052	90	10	5	5	247	1	0.6128	0.05	34	0	34	27	8	18\2	3.6	11.9	0.06	0.97	0.1		0.8	
1\2	1.8m LINTEL	0.0686	90	10	5	5	247	1	0.6128	0.066	45	0	45	34	12	1\3	2.7	14.5	0.06	1.01	0.12		0.8	
1\3	1.8m LINTEL	0.0173	90	10	5	5	247	1	0.6128	0.017	11	12	23	18	5	1\4	1.1	13	0.05	0.71	0.08		0.8	
1\4	1.8m LINTEL	0.0118	90	10	5	5	247	1	0.6128	0.011	8	4	12	10	2	2\5	0.8	10.1	0.04	0.44	0.06		0.8	
1\5	1.8m LINTEL	0.0299	90	10	5	5	247	1	0.6128	0.029	20	4	24	19	5	4\1	1.7	6.2	0.06	1.06	0.06		0.8	
1\6	1.8m LINTEL	0.0243	90	10	5	5	247	1	0.6128	0.024	16	0	16	13	3	1\7	0.5	5	0.05	0.93	0.05		0.8	
1\7	1.8m LINTEL	0.0368	90	10	5	5	247	1	0.6128	0.035	24	4	28	22	6	1\8	0.4	5	0.06	1.23	0.06		0.8	
1\8	1.8m LINTEL	0.0205	90	10	5	5	247	1	0.6128	0.02	14	5	19	15	4	1\9	0.4	4.9	0.05	1.02	0.05		0.8	
1\9	1.8m LINTEL	0.025	90	10	5	5	247	1	0.6128	0.024	17	3	20	16	4	1\10	0.4	3.3	0.06	1.18	0.05		0.8	
1\10	1.8m LINTEL	0.0315	90	10	5	5	247	1	0.6128	0.03	21	4	25	20	5	1\11	1.6	3.9	0.06	1.23	0.06		0.8	
1\11	1.8m LINTEL	0.0408	90	10	5	5	247	1	0.6128	0.039	27	5	32	25	7	1\12	0.3	5.7	0.06	1.3	0.07		0.8	
1\12	1.8m LINTEL	0.0247	90	10	5	5	247	1	0.6128	0.024	16	7	23	-1	25	1\13	0.8	7.1	0.05	1	0.07		0.8	
1\13	1.8m LINTEL	0.0268	90	10	5	5	247	1	0.6128	0.026	18	24	42	42	0		0	5	0.07	0.84	0.11		0.8	
1\14	1.8m LINTEL	0.0022	50	50	5	5	247	1	0.6128	0.002	1	0	1	1	0	1\15	0.4	0.8	0.03	0.3	0.01		0.8	
1\15	1.8m LINTEL	0.026	90	10	5	5	247	1	0.6128	0.025	17	0	17	14	3	1\16	0.4	0.8	0.07	1.57	0.03		0.8	
1\16	2.4m LINTEL SAG	0.0324	90	10	5	5	247	1	0.6128	0.031	21	4	25	25	0	20\1	0.2	0.1	0.05			0.12	0.5	
1\17	1.8m LINTEL	0.0446	90	10	5	5	247	1	0.6128	0.043	29	0	29	23	7	C4-2\1	0.6	0.8	0.08	2.01	0.04		0.8	
1\18	HEADWALL OUTLET		90		5	5						0												
3\1	900 x 900 GSIP		90	10	5	5	0			0	0	0	0	0	0		0						0.8	
3\2	1.8m LINTEL	0.0067	90	10	5	5	247	1	0.6128	0.006	4	0	4	4	1	3\3	0.7	1.8	0.04	0.41	0.02		0.8	
3\3	1.8m LINTEL	0.0152	90	10	5	5	247	1	0.6128	0.015	10	1	11	9	2	3\4	0.5	6.9	0.04	0.45	0.05		0.8	
3\4	1.8m LINTEL	0.0219	90	10	5	5	247	1	0.6128	0.021	14	3	17	13	3	3\5	0.6	6.9	0.05	0.79	0.06		0.8	
3\5	1.8m LINTEL	0.0193	90	10	5	5	247	1	0.6128	0.019	13	3	16	13	3	3\6	0.5	6.5	0.05	0.79	0.05		0.8	
3\6	1.8m LINTEL	0.0273	90	10	5	5	247	1	0.6128	0.026	18	3	21	17	4	3\7	0.4	5	0.05	1.05	0.06		0.8	
3\7	1.8m LINTEL	0.0327	90	10	5	5	247	1	0.6128	0.031	22	4	26	0	26	3\8	0.2	3.3	0.06	1.34	0.06		0.8	
3\8	1.2m LINTEL	0.0071	90	10	5	5	247	1	0.6128	0.007	5	25	30	23	8	3\10	1.3	2.1	0.07	1.58	0.06		0.8	
3\9	1.8m LINTEL	0.0242	90	10	5	5	247	1	0.6128	0.023	16	9	25	20	5	12\1	0.6	3.7	0.06	1.26	0.06		0.8	
3\10	1.8m LINTEL	0.0212	90	10	5	5	247	1	0.6128	0.02	14	8	22	17	4	3\11	0.6	4	0.06	1.14	0.05		0.8	
3\11	1.8m LINTEL	0.0056	90	10	5	5	247	1	0.6128	0.005	4	4	8	6	2	3\12	0.6	4.3	0.04	0.44	0.04		0.8	
3\12	1.8m LINTEL	0.0205	90	10	5	5	247	1	0.6128	0.02	14	1	15	12	3	3\13	0.3	2	0.06	1.26	0.04		0.8	
3\13	2.4m LINTEL SAG	0.0157	90	10	5	5	247	1	0.6128	0.015	10	3	13	13	0	1\14	0.5	0.5	0.04			0.05	0.5	
6\1	1.8m LINTEL	0.0723	90	10	5	5	247	1	0.6128	0.07	48	11	59	2	58	7\1	3.6	7.1	0.07	1.7	0.1		0.8	
7\1	1.8m LINTEL	0.0422	90	10	5	5	247	1	0.6128	0.041	28	58	86	54	32	7\2	3.6	1.3	0.1	2.92	0.08		0.8	
7\2	1.8m LINTEL	0.0263	90	10	5	5	247	1	0.6128	0.025	17	32	49	35	14	20\1	1.7	0.8	0.09	2.47	0.05		0.8	
10\1	1.8m LINTEL	0.0315	90	10	5	5	247	1	0.6128	0.03	21	6	27	21	5	11\1	3.6	5	0.06	1.23	0.06		0.8	
11\1	1.8m LINTEL	0.0489	90	10	5	5	247	1	0.6128	0.047	32	6	38	29	9	3\9	3.6	3.5	0.07	1.59	0.07		0.8	
12\1	1.8m LINTEL	0.0128	90	10	5	5	247	1	0.6128	0.012	8	6	14	11	3	13\1	3.6	4.4	0.05	0.77	0.05		0.8	
13\1	1.8m LINTEL	0.0272	90	10	5	5	247	1	0.6128	0.026	18	3	21	17	4	13\2	3.6	2.3	0.06	1.36	0.04		0.8	
13\2	2.4m LINTEL SAG	0.0273	90	10	5	5	247	1	0.6128	0.026	18	4	22	22	0	3\13	0.7	0.5	0.05			0.06	0.5	
15\1	2.4m LINTEL SAG	0.0605	90	10	5	5	247	1	0.6128	0.058	40	0	40	40	0		3.6	2.6	0.07			0.15	0.5	
15\2	900 x 900 GSIP	0.0123	50	50	5	5	247	1	0.6128	0.01	7	0	7	7	0		0.6	1					0.8	
15\3	1.8m LINTEL	0.0245	90	10	5	5	247	1	0.6128	0.024	16	0	16	13	3	15\4	0.6	1.4	0.06	1.31	0.04		0.8	
15\4	1.8m LINTEL	0.0275	90	10	5	5	247	1	0.6128	0.026	18	3	21	17	4	15\5	0.3	1					0.8	
15\5	1.8m LINTEL	0.0227	90	10	5	5	247	1	0.6128	0.022	15	4	19	16	4		1.5	0.9	0.07	1.58	0.04		0.8	
15\6	HW OUT		90		5	5						0												
17\1	1.8m LINTEL	0.0226	90	10	5	5	247	1	0.6128	0.022	15	3	18	15	4	20\1	3.6	0.9	0.07	1.52	0.03		0.8	
19\1	1.8m LINTEL	0.0251	90	10	5	5	247	1	0.6128	0.024	17	0	17	13	3	17\1	3.6	1.1	0.06	1.42	0.03		0.8	
20\1	2.4m LINTEL SAG	0.1132	90	10	5	5	247	1	0.6128	0.109	75	24	99	92	7		3.6	0.1	0.12			0.12	0.5	
100\1	1.8m LINTEL	0.0079	100	0	5	5	247	1		0.008	5	0	5	4	1	100\2	3.6	4	0.03	0.41	0.03		0.8	
100\2	900 x 900 VGRATE	0.0538	80	20	5	5	247	1	0.6128	0.05	34	1	35	27	8	100\3	2	1.8	0.06	2.3	0.04		0.8	
100\3	2.4m LINTEL SAG	0.0204	95	5	5	5	247	1	0.6128	0.02	14	8	22	22	0		1.9	2.3	0.05			0.15	0.5	
100\4	1.8m LINTEL	0.0007	90	10	5	5	247	1	0.6128	0.001	0	0	0	0	0		1.9	5.8					0.8	
100\5	900 x 900 JUNCTION		90	10	5	5	0			0	0	0	0	0	0		1.9						0.8	
15\6	HW OUT		90		5	5						0												
101\1	900 x 900 JUNCTION		90	10	5	5	0			0	0	0	0	0	0		0						0.8	
101\2	900 x 900 JUNCTION		90	10	5	5	0			0	0	0	0	0	0		0.2	1.4					0.8	
C2\1	900 x 900 GSIP		90	10	5	5	0			0	0	0	0	0	0		0						0.8	
C3\1	900 x 900 GSIP		90	10	5	5	0			0	0	0	0	0	0		0						0.8	
C4\1	900 x 900 JUNCTION		90	10	5	5	0			0	0	0	0	0	0		0						0.8	
CP\1	900 x 900 GSIP	0.334	10	90	5	8	232	1	0.6128	0.218	140	0	140	140	0		2.4						0.8	
D2\1	900 x 900 GSIP		90	10	5	5	0			0	0	0	0	0	0		0						0.8	
D3\1	900 x 900 GSIP		90	10	5	5	0			0	0	0	0	0	0		0						0.8	

100 YEAR HYDRAULIC DESIGN

REACH	TYPE	LENGTH m	DIA. mm	U/S IL m	D/S IL m	PIPE GRADE %	PIPE FLOW L/s	PIPE VELOCITY m/s	U/S HGL m	D/S HGL m	GRADE HGL %	U/S PIT Ku
1\1 to 1\2	RCP CLASS 4	10.7	375	62.09	61.13	9	27	3	62.21	61.32	8.33	3.6
1\2 to 1\3	RCP CLASS 4	16.5	375	61.1	59.29	11	60	4.1	61.27	59.4	11.39	2.7
1\3 to 1\4	RCP CLASS 4	16.9	375	59.1	56.9	13	111	5.1	59.34	57.17	12.85	1.1
1\4 to 1\5	RCP CLASS 4	19.8	375	56.86	55.67	6	120	3.9	57.12	56.19	4.67	0.8
1\5 to 1\6	RCP CLASS 4	7.7	375	55.64	55.36	3.62	136	3.4	56.06	56.02	0.4	1.7
1\6 to 1\7	RCP CLASS 4	36.6	450	55.28	53.46	5	527	5.3	55.72	54.13	4.36	0.5
1\7 to 1\8	RCP CLASS 4	18.8	450	53.42	52.48	5	566	5.4	53.86	52.82	5.55	0.4
1\8 to 1\9	RCP CLASS 4	24	450	52.13	51.23	3.75	578	4.8	52.58	51.91	2.77	0.4
1\9 to 1\10	RCP CLASS 4	29.9	525	51.16	50.34	2.75	770	4.5	51.67	50.72	3.17	0.4
1\10 to 1\11	RCP CLASS 4	38.3	525	48.17	47.79	1	963	4.4	49.5	49.5	0	1.6
1\11 to 1\12	RCP CLASS 4	24	525	47.75	47.27	2	979	4.5	49.26	48.58	2.85	0.3
1\12 to 1\13	RCP CLASS 4	25.1	525	46.76	45.53	4.87	1103	6.1	47.44	46.34	4.39	0.8
1\13 to 1\14	RCP CLASS 4	22	600	45.5	45.23	1.21	1137	4	46.34	45.82	2.37	0
1\14 to 1\15	RCP CLASS 4	26	900	44.5	44.24	1	2086	3.8	45.54	45.3	0.95	0.4
1\15 to 1\16	RCP CLASS 4	23.1	1050	44.09	43.86	1	2341	4	45.15	45.02	0.54	0.4
1\16 to 1\17	RCP CLASS 4	13.8	1200	43.71	43.57	1	2438	4.1	44.98	44.94	0.29	0.2
1\17 to 1\18	RCP CLASS 4	31.5	1200	41.77	41.46	1	2452	4.1	44.79	44.7	0.29	0.6
												0.5
3\1 to 3\2	RCP CLASS 4	8.8	375	59.59	59.24	4	137	3.5	59.87	59.54	3.73	0
3\2 to 3\3	RCP CLASS 4	25.8	375	59.21	57.85	5.25	141	3.9	59.48	58.15	5.18	0.7
3\3 to 3\4	RCP CLASS 4	37.1	375	57.82	55.31	6.77	149	4.4	58.1	55.67	6.56	0.5
3\4 to 3\5	RCP CLASS 4	32.1	375	55.27	53.19	6.5	187	4.6	55.59	53.63	6.09	0.6
3\5 to 3\6	RCP CLASS 4	45.6	375	52.89	50.61	5	427	4.9	53.26	51.15	4.63	0.5
3\6 to 3\7	RCP CLASS 4	55.3	450	50.42	47.66	5	575	5.4	50.88	49.4	2.68	0.4
3\7 to 3\8	RCP CLASS 4	9	450	47.62	47.36	3	597	4.3	49.25	48.99	2.89	0.2
3\8 to 3\9	RCP CLASS 4	21.6	525	47.28	46.74	2.5	732	4.3	48.21	47.79	1.94	1.3
3\9 to 3\10	RCP CLASS 4	8.5	525	46.71	46.49	2.5	748	4.3	47.43	47.26	2.03	0.6
3\10 to 3\11	RCP CLASS 4	9.4	600	46.42	46.18	2.5	764	4.4	47.03	46.93	1.06	0.6
3\11 to 3\12	RCP CLASS 4	32.7	600	46.15	45.33	2.5	779	4.4	46.7	46.28	1.29	0.6
3\12 to 3\13	RCP CLASS 4	6.5	600	45.3	45.13	2.5	787	4.4	46.16	46.09	1.12	0.3
3\13 to 1\14	RCP CLASS 4	11.9	675	44.85	44.73	1	956	3.2	45.89	45.78	0.9	0.5
												1.6
6\1 to 1\12	RCP CLASS 4	12	375	47.34	47.22	1	2	0.6	48.58	48.58	0	3.6
												0.8
7\1 to 7\2	RCP CLASS 4	25	375	44.93	44.68	1	54	1.6	45.4	45.38	0.07	3.6
7\2 to 1\15	RCP CLASS 4	15.9	375	44.65	44.49	1	88	1.9	45.32	45.3	0.17	1.7
												0.5
10\1 to 3\6	RCP CLASS 4	10.4	375	50.8	50.61	1.85	21	1.6	51.15	51.15	0.01	3.6
												0.4
11\1 to 3\7	RCP CLASS 4	9.1	375	48.06	47.97	1	29	1.4	49.4	49.4	0.02	3.6
												0.2
12\1 to 3\11	RCP CLASS 4	8.5	375	46.57	46.49	1	11	1	46.93	46.93	0	3.6
												0.6
13\1 to 13\2	RCP CLASS 4	8.7	375	45.59	45.5	1	17	1.2	46.2	46.2	0.01	3.6
13\2 to 3\13	RCP CLASS 4	7	375	44.95	44.88	1	161	2.1	46.13	46.09	0.56	0.7
												1.3
15\1 EX to 15\1	RCP CLASS 4	10.1	375	47.2	46.92	2.72	28	2	47.32	47.03	2.88	3.6
15\1 to 15\2	RCP CLASS 4	16.2	375	46.89	46.73	1	34	1.4	47.02	46.84	1.12	1.2
15\2 to 15\3	RCP CLASS 4	5.7	375	46.69	46.64	1	40	1.5	46.84	46.74	1.62	0.6
15\3 to 15\4	RCP CLASS 4	27.5	525	44.02	43.75	1	584	2.7	46.5	46.16	1.24	0.6
15\4 to 15\5	RCP CLASS 4	28	525	43.72	43.44	1	600	2.8	46.05	45.68	1.31	0.3
15\5 to 15\6	RCP CLASS 4	35.2	525	42.59	41.47	3.18	634	4.6	45.02	44.5	1.46	1.5
17\1 to 15\5	RCP CLASS 4	7.4	375	46.08	46	1	24	1.3	46.19	46.09	1.37	3.6
												1.1
19\1 to 15\4	RCP CLASS 4	10.6	375	46.41	46.3	1	13	1.1	46.94	46.94	0	3.6
												0.3
20\1 to 1\16	RCP CLASS 4	7	375	45.28	45.21	1	92	1.9	45.5	45.38	1.74	3.6
100\1 to 100\2	RCP CLASS 4	29.1	375	45.17	44.87	1	4	0.8	45.94	45.94	0	3.6
100\2 to 100\3	RCP CLASS 4	7.4	375	44.84	44.77	1	211	2.2	45.57	45.5	0.95	2
100\3 to 100\4	RCP CLASS 4	13.9	375	44.73	44.31	3	233	3.6	45.07	44.53	3.92	1.9
100\4 to 100\5	RCP CLASS 4	5.5	375	42.69	42.63	1	233	2.1	43.04	42.98	1.18	1.9
100\5 to 15\6	RCP CLASS 4	16.8	375	42.14	41.47	4	233	4	42.48	41.67	4.88	1.9
101\1 to 101\2	RCP CLASS 4	10	525	44.27	44.17	1	530	2.7	46.99	46.89	1.03	0
101\2 to 15\3	RCP CLASS 4	9	525	44.14	44.05	1	530	2.7	46.82	46.72	1.03	0.2
												0.6
C2\1 to 1\10	RCP CLASS 4	9.2	375	48.3	48.21	1	122	2	49.5	49.5	0	0
												1.6
C3\1 to 13\2	RCP CLASS 4	7.5	375	45.06	44.99	1	122	2	46.22	46.2	0.32	0
												0.7
C4\1 to 1\15	RCP CLASS 4	5.6	375	44.8	44.74	1	169	2.2	45.33	45.3	0.61	0
												0.4
CP\1 to 1\12	RCP CLASS 4	7.4	375	47.22	47.14	1	140	2.1	48.61	48.58	0.43	2.4
												0.8
												0.5
D2\1 to 3\6	RCP CLASS 4	4.1	375	50.5	50.46	1	114	2	51.16	51.15	0.28	0
												0.4
D3\1 to 3\8	RCP CLASS 4	5.2	375	47.41	47.36	1	114	2	49	48.99	0.28	0

These plans are referred to in certificate no. **16746** approved by:

Eric Hausfeld
Registered Certifier

Registration No: BDC 2416
Categories: Certifier – Subdivision
Certifier – Strata
Certifier – Stormwater
Certifier – Road & Drainage
Certifier – Hydraulic (stormwater)

Land Development Certificates
www.LDC.com.au

DIAL 1100 BEFORE YOU DIG

CONSTRUCTION ISSUE

REV.	DATE	AMENDMENT	DESIGN	DRAWN	CHECKED	APPROVED
1	21.01.22	ISSUED FOR CONSTRUCTION	B.M.	J.J.	B.M.	B.M.

SCALES

ALL DIMENSIONS ARE IN METRES. DO NOT SCALE

DESIGN FILE S:\300001\DESIGN\12D\STAGE 2 CC\DESIGN FILE.project

adw Johnson
Central Coast
5 Pioneer Avenue,
P.O. Box 3717,
Tuggerah N.S.W. 2259
Phone: (02) 4305 4300
Fax: (02) 4305 4399
email: coast@adwjohnson.com.au
www.adwjohnson.com.au
ABN 62 129 445 398

CLIENT

FRASERS PROPERTY

PROPERTY DESCRIPTION

LOT 100 D.P.1262209 & LOT 1 D.P.859537
EPPING ROAD & LYONPARK ROAD,
MACQUARIE PARK
SSDA 8903

SURVEYED: ADW Johnson
DATUM: GDA94 M.G.A. ZONE 56 A.H.D.

PROJECT: PROPOSED SUBDIVISION

PLAN TITLE: STORMWATER CALCULATION CHARTS
100 YEAR A.R.I.

PROJECT No. 300001(2) – DISCIPLINE ENG – NUMBER 422 REV. 1

Plotted By: Ben Myles Plot Date: 21/01/22 2:31:43PM Cad File: S:\300001\DRAWINGS\ENGINEERING\CIVIL\STAGE 2 CC ENG\300001(2)-ENG-422.DWG

300001(2)-ENG-431

NOTES: –

1. ALL STORMWATER PITS TO BE CONSTRUCTED IN ACCORDANCE WITH RYDE COUNCILS ENGINEERING CONSTRUCTION SPECIFICATION.
2. ALL PITS DEEPER THAN 1.0m TO HAVE STEP IRONS.
3. ALL STORMWATER PIPE CLASSES ARE TO COMPLY WITH COUNCILS DESIGN AND CONSTRUCTION SPECIFICATIONS. IF THERE ARE DISCREPANCIES BETWEEN COUNCILS SPECIFICATIONS AND THE APPROVED CONSTRUCTION CERTIFICATE PLANS PLEASE NOTIFY THE SUPERINTENDENT IMMEDIATELY. IT IS THE CONTRACTORS RESPONSIBILITY TO USE THE APPROPRIATE CONSTRUCTION METHODOLOGY TO COMPACT AROUND/OVER STORMWATER PIPES AND ENSURE NO CRACKING OF THE STORMWATER PIPES OCCURS.
4. PITS DEEPER THAN 2.5m TO BE CONSTRUCTED IN ACCORDANCE WITH STRUCTURAL ENGINEERS DESIGN.
5. REFER TO DRAWINGS PREPARED BY RARI FOR SEWER DETAILS.
6. ALL GRATES TO HAVE CHILD PROOF LOCK DOWN SYSTEM INSTALLED.

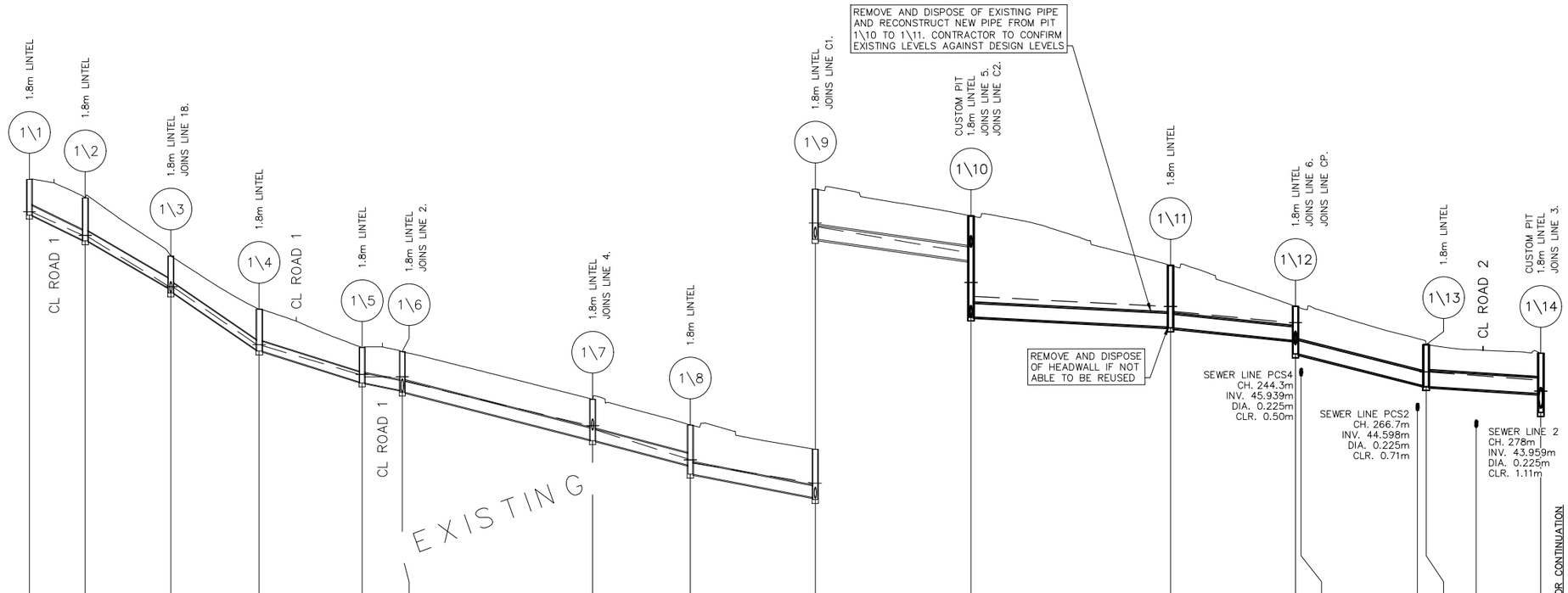

PIPE FLOW (m3/s)	0.025		0.058		0.088		0.093		0.106		0.378		0.409		0.417		0.574		0.703		0.716		0.837				0.845					
PIPE SIZE (mm) & CLASS	375ø RCP 4		375ø RCP 4		375ø RCP 4		375ø RCP 4		375ø RCP 4		450ø RCP 4		450ø RCP 4		450ø RCP 4		525ø RCP 4		525ø RCP 4		525ø RCP 4		525ø RCP 4				600ø RCP 4					
GRADE %	9.00%		11.00%		13.00%		6.00%		3.62%		5.00%		5.00%		3.75%		2.75%		1.00%		2.00%		4.87%				1.21%					
DATUM R.L.	43																33															
DEPTH SURFACE TO INVERT		1.37		1.63	1.66	1.23	1.41	1.57	1.61	1.33	1.36	1.49	1.56	1.56	1.59	1.54	1.89	1.86	1.93	1.72	3.89	2.37	2.4	1.31	1.83		1.58	1.61	1.55	2.28		
H.G.L. LEVELS	62.21	62.20	61.31	61.27	59.36 59.34	59.32	57.11	57.09	55.96 55.97	55.88	55.87	55.70	53.99	53.84	52.71 52.68	52.56	51.79	51.64	50.65 49.50	48.96	48.58	48.39	47.95 47.90	47.27			46.06	45.75 45.32	45.22			
INVERT LEVEL	62.09		61.13	61.10	59.29	59.10	56.90	56.86	55.67	55.64	55.36	55.28	53.46	53.42	52.48	52.13	51.23	51.16	50.34	48.17	47.79	47.75	47.27	46.76	46.72		45.59 45.53	45.50	45.38	45.23	44.50	
DESIGN SURFACE LEVEL	63.46		62.75		60.51		58.47		57.00		56.85		55.01		54.02		53.09			52.06		50.16		48.58				47.11			46.78	
PIPE DISTANCE & PIPE CHAINAGE	0.00	10.72	10.72	16.45	27.17	16.95	44.12	19.80	63.92	7.71	71.62	36.57	108.19	18.77	126.96	24.01	150.97	29.91	180.88	38.33		219.21	24.00	243.21 1.07	244.28	25.11	23.43 266.65	268.32 9.63	277.95	22.02	290.34	

LINE 1

These plans are referred to in certificate no. **16746** approved by:

Eric Hausfeld
Registered Certifier
Registration No: BDC 2416
Categories: Certifier – Subdivision
Certifier – Strata
Certifier – Stormwater
Certifier – Road & Drainage
Certifier – Hydraulic (stormwater)

Land Development Certificates
www.LDC.com.au

DIAL1100 BEFORE YOU DIG

CONSTRUCTION ISSUE

REV.	DATE	AMENDMENT	DESIGN	DRAWN	CHECKED	APPROVED
1	21.01.22	ISSUED FOR CONSTRUCTION	B.M.	J.J.	B.M.	B.M.

SCALES: A1 1:500 (0, 12.5, 25.0m) A3 1:1000; A1 1:100 (0, 2.5, 5.0m) A3 1:200

DESIGN FILE S:\300001\DESIGN\12D\STAGE 2 CC\DESIGN FILE.project

ALL DIMENSIONS ARE IN METRES. DO NOT SCALE

adw Johnson
Central Coast
5 Pioneer Avenue,
P.O. Box 3717,
Tuggerah N.S.W. 2259
Phone: (02) 4305 4300
Fax: (02) 4305 4399
email: coast@adwjohnson.com.au
www.adwjohnson.com.au
ABN 62 129 445 398

CLIENT: FRASERS PROPERTY

PROPERTY DESCRIPTION: LOT 100 D.P.1262209 & LOT 1 D.P.859537 EPPING ROAD & LYONPARK ROAD, MACQUARIE PARK SSDA 8903

SURVEYED: ADW Johnson

DATUM: GDA94 M.G.A. ZONE 56 A.H.D.

PROJECT: PROPOSED SUBDIVISION

PLAN TITLE: STORMWATER LONGITUDINAL SECTIONS SHEET 1

PROJECT No.	DISCIPLINE	NUMBER	REV.
300001(2) –	ENG –	431	1

Plotted By: Ben Myles Plot Date: 21/01/22 2:31:49PM Cad File: S:\300001\DRAWINGS\ENGINEERING\CIVIL\STAGE 2 CC ENG\300001(2)-ENG-431.DWG

100mm AT FULL SIZE

This plan includes coloured information. If you have a black and white copy you do not have all of the information. This note is coloured RED.

300001(2)-ENG-432

NOTES: –

1. ALL STORMWATER PITS TO BE CONSTRUCTED IN ACCORDANCE WITH RYDE COUNCILS ENGINEERING CONSTRUCTION SPECIFICATION.
2. ALL PITS DEEPER THAN 1.0m TO HAVE STEP IRONS.
3. ALL STORMWATER PIPE CLASSES ARE TO COMPLY WITH COUNCILS DESIGN AND CONSTRUCTION SPECIFICATIONS. IF THERE ARE DISCREPANCIES BETWEEN COUNCILS SPECIFICATIONS AND THE APPROVED CONSTRUCTION CERTIFICATE PLANS PLEASE NOTIFY THE SUPERINTENDENT IMMEDIATELY. IT IS THE CONTRACTORS RESPONSIBILITY TO USE THE APPROPRIATE CONSTRUCTION METHODOLOGY TO COMPACT AROUND/OVER STORMWATER PIPES AND ENSURE NO CRACKING OF THE STORMWATER PIPES OCCURS.
4. PITS DEEPER THAN 2.5m TO BE CONSTRUCTED IN ACCORDANCE WITH STRUCTURAL ENGINEERS DESIGN.
5. REFER TO DRAWINGS PREPARED BY RARI FOR SEWER DETAILS.
6. ALL GRATES TO HAVE CHILD PROOF LOCK DOWN SYSTEM INSTALLED.

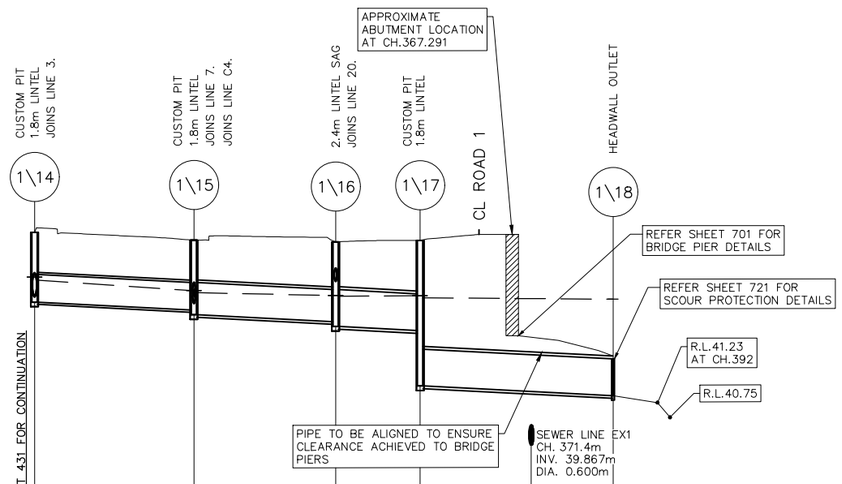

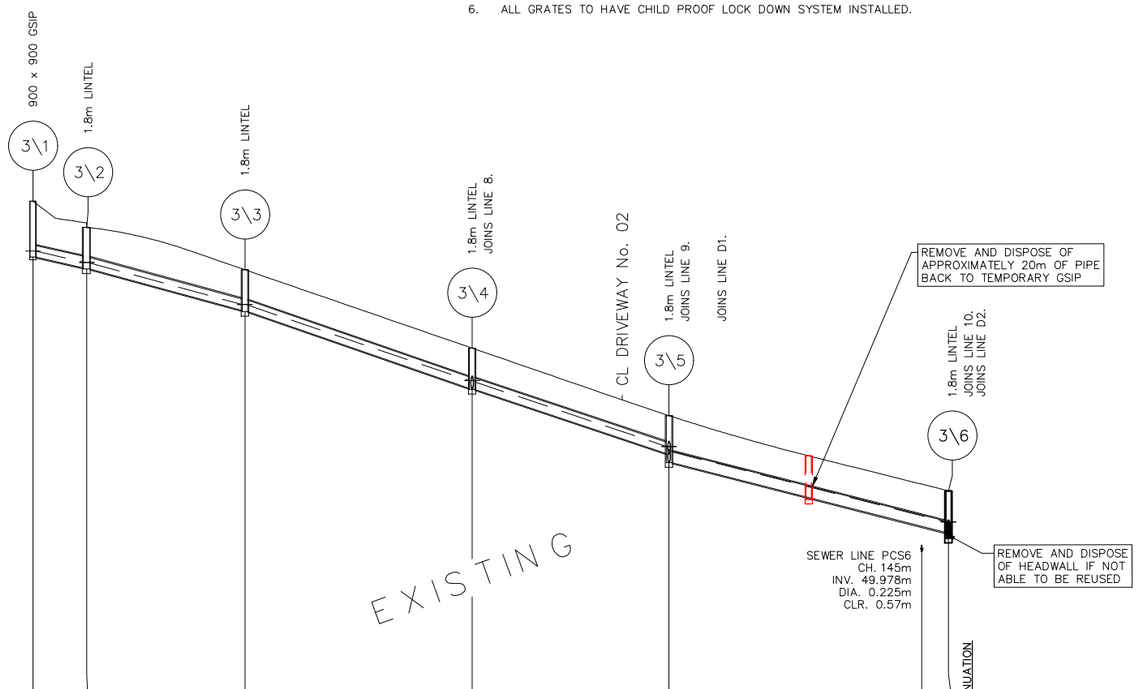

PIPE FLOW (m3/s)		1.451				1.579				1.635				1.650								0.070		0.073				0.081				0.114				0.274					
PIPE SIZE (mm) & CLASS		900ø RCP 4				1050ø RCP 4				1200ø RCP 4				1200ø RCP 4								375ø RCP 4		375ø RCP 4				375ø RCP 4				375ø RCP 4				375ø RCP 4					
GRADE %		1.00%				1.00%				1.00%				1.00%								4.00%		5.25%				6.77%				6.50%				5.00%					
DATUM R.L.																						40																			
DEPTH SURFACE TO INVERT	1.55	2.28			2.28	2.43			2.6	2.75			2.94	4.74				1.2				1.82	1.32	1.35			1.33	1.36			1.31	1.35			1.23	1.53			1.36	1.54		
H.G.L. LEVELS	45.75 45.32	45.22			44.88	44.81			44.72	44.70			44.71	44.64				44.1				59.79	59.42	59.40			58.04	58.02			55.56	55.52			53.42	53.24			50.95	50.84		
INVERT LEVEL	45.23	44.50			44.24	44.09			43.86	43.71			43.57	41.77			41.59	41.46				59.59	59.24	59.21			57.85	57.82			55.31	55.27			53.19	52.89			50.81	50.61	50.42	
DESIGN SURFACE LEVEL	46.78				46.52				46.47				46.51					42.66				61.42		60.56			59.18				56.62				54.42						51.97	
PIPE DISTANCE & PIPE CHAINAGE	290.34		26.00		316.34		23.11		339.45		13.77		353.22			31.50 18.14 371.36		384.72			0.00		8.79		25.80	8.79			34.59		37.05		71.64		32.13		103.76		45.59		41.22 144.98		149.35

LINE 3

These plans are referred to in certificate no. **16746** approved by:
Eric Hausfeld
Registered Certifier
Registration No: BDC 2416
Categories: Certifier – Subdivision, Certifier – Strata, Certifier – Stormwater, Certifier – Road & Drainage, Certifier – Hydraulic (stormwater)
Land Development Certificates
www.LDC.com.au

DIAL1100 BEFORE YOU DIG

CONSTRUCTION ISSUE

REV.	DATE	AMENDMENT	DESIGN	DRAWN	CHECKED	APPROVED
1	21.01.22	ISSUED FOR CONSTRUCTION	B.M.	J.J.	B.M.	B.M.

SCALES: A1 1:500 (0, 12.5, 25.0m) A3 1:1000; A1 1:100 (0, 2.5, 5.0m) A3 1:200

DESIGN FILE S:\300001\DESIGN\12D\STAGE 2 CC\DESIGN FILE.project

ALL DIMENSIONS ARE IN METRES. DO NOT SCALE

adw Johnson
Central Coast
5 Pioneer Avenue,
P.O. Box 3717,
Tuggerah N.S.W. 2259
Phone: (02) 4305 4300
Fax: (02) 4305 4399
email: coast@adwjohnson.com.au
www.adwjohnson.com.au
ABN 62 129 445 398

CLIENT: FRASERS PROPERTY

PROPERTY DESCRIPTION: LOT 100 D.P.1262209 & LOT 1 D.P.859537, EPPING ROAD & LYONPARK ROAD, MACQUARIE PARK, SSDA 8903

SURVEYED: ADW Johnson
DATUM: GDA94 M.G.A. ZONE 56 A.H.D.

PROJECT: PROPOSED SUBDIVISION
PLAN TITLE: STORMWATER LONGITUDINAL SECTIONS SHEET 2

PROJECT No.	DISCIPLINE	NUMBER	REV.
300001(2) –	ENG –	432	1

Plotted By: Ben Myles Plot Date: 21/01/22 2:31:53PM Cad File: S:\300001\DRAWINGS\ENGINEERING\CIVIL\STAGE 2 CC ENG\300001(2)-ENG-432.DWG

100mm AT FULL SIZE

This plan includes coloured information. If you have a black and white copy you do not have all of the information. This note is coloured RED.

300001(2)-ENG-433

NOTES: –

1. ALL STORMWATER PITS TO BE CONSTRUCTED IN ACCORDANCE WITH RYDE COUNCILS ENGINEERING CONSTRUCTION SPECIFICATION.
2. ALL PITS DEEPER THAN 1.0m TO HAVE STEP IRONS.
3. ALL STORMWATER PIPE CLASSES ARE TO COMPLY WITH COUNCILS DESIGN AND CONSTRUCTION SPECIFICATIONS. IF THERE ARE DISCREPANCIES BETWEEN COUNCILS SPECIFICATIONS AND THE APPROVED CONSTRUCTION CERTIFICATE PLANS PLEASE NOTIFY THE SUPERINTENDENT IMMEDIATELY. IT IS THE CONTRACTORS RESPONSIBILITY TO USE THE APPROPRIATE CONSTRUCTION METHODOLOGY TO COMPACT AROUND/OVER STORMWATER PIPES AND ENSURE NO CRACKING OF THE STORMWATER PIPES OCCURS.
4. PITS DEEPER THAN 2.5m TO BE CONSTRUCTED IN ACCORDANCE WITH STRUCTURAL ENGINEERS DESIGN.
5. REFER TO DRAWINGS PREPARED BY RARI FOR SEWER DETAILS.
6. ALL GRATES TO HAVE CHILD PROOF LOCK DOWN SYSTEM INSTALLED.

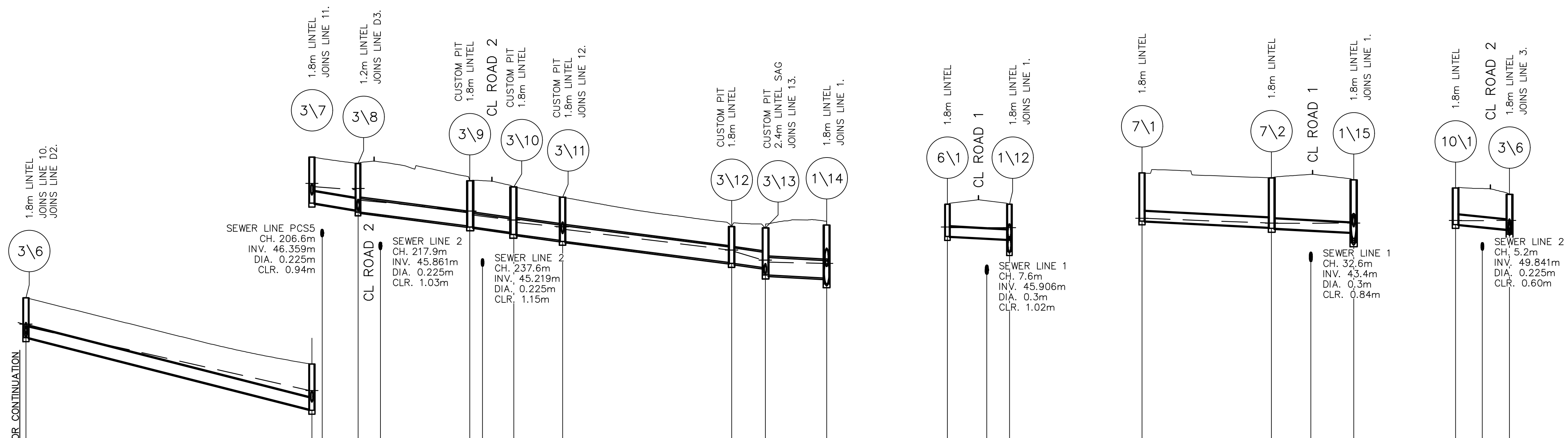

LINE 3 (CONTINUED)

PIPE FLOW (m3/s)	0.370	0.404	0.478	0.488	0.496	0.504	0.511	0.614	
PIPE SIZE (mm) & CLASS	450ø RCP 4	450ø RCP 4	525ø RCP 4	525ø RCP 4	600ø RCP 4	600ø RCP 4	600ø RCP 4	675ø RCP 4	
GRADE %	5.00%	3.00%	2.50%	2.50%	2.50%	2.50%	2.50%	1.00%	
DATUM R.L.	40	32							

PIT	3\6	3\7	3\8	(sewer)	3\9	3\10	3\11	3\12	3\13	3\14
DEPTH SURFACE TO INVERT	1.36 / 1.54	1.75 / 1.78	1.8 / 1.88		1.75 / 1.78	1.76 / 1.83	1.67 / 1.71	1.39 / 1.42	1.54 / 1.82	2.05 / 2.28
H.G.L. LEVELS	50.95 / 50.84	48.39 / 48.26	48.14 / 48.19 / 47.74		47.32 / 47.17	46.98 / 46.88	46.71 / 46.61	45.82 / 45.76	45.43 / 45.35	45.32 / 45.22
INVERT LEVEL	50.61 / 50.42	47.66 / 47.62	47.57 / 47.36 / 47.28	47.18	46.74 / 46.71	46.65 / 46.49 / 46.42	46.18 / 46.15	45.33 / 45.30	45.13 / 44.85	44.73 / 44.50
DESIGN SURFACE LEVEL	51.97	49.41	49.16		48.49	48.25	47.85	46.72	46.67	46.78
PIPE CHAINAGE	149.35	204.64 / 1.99 / 206.63	213.59 / 4.30	217.89	235.19 / 2.44 / 237.63	243.68	253.11	285.80	292.32	304.18

PIPE DISTANCE: 55.29, 8.95, 21.60, 8.49, 9.43, 32.69, 6.52, 11.86

LINE 6

PIPE FLOW (m3/s)	0.035		
PIPE SIZE (mm) & CLASS	375ø RCP 4		
GRADE %	1.00%		
DATUM R.L.	33		
PIT	6\1	(sewer)	1\12
DEPTH SURFACE TO INVERT	1.24		1.36 / 1.83
H.G.L. LEVELS	47.97 / 47.95		47.95 / 47.95 / 47.27
INVERT LEVEL	47.34		47.26 / 47.22 / 46.76
DESIGN SURFACE LEVEL	48.58		48.58
PIPE CHAINAGE	0.00	7.63 / 7.63	12.00

PIPE DISTANCE: 12.00

LINE 7

PIPE FLOW (m3/s)	0.021	0.034		
PIPE SIZE (mm) & CLASS	375ø RCP 4	375ø RCP 4		
GRADE %	1.00%	1.00%		
DATUM R.L.	30			
PIT	7\1	7\2	(sewer)	1\15
DEPTH SURFACE TO INVERT	1.86	1.92 / 1.95		2.03 / 2.43
H.G.L. LEVELS	45.04 / 45.04	44.88 / 44.88		44.88 / 44.81
INVERT LEVEL	44.93	44.68 / 44.65	44.57	44.49 / 44.09
DESIGN SURFACE LEVEL	46.79	46.60		46.52
PIPE CHAINAGE	0.00	25.04	7.60 / 32.65	40.94

PIPE DISTANCE: 25.04, 15.89

LINE 10

PIPE FLOW (m3/s)	0.015		
PIPE SIZE (mm) & CLASS	375ø RCP 4		
GRADE %	1.85%		
DATUM R.L.	36		
PIT	10\1	(sewer)	3\6
DEPTH SURFACE TO INVERT	1.41		1.36 / 1.54
H.G.L. LEVELS	50.95		50.95 / 50.84
INVERT LEVEL	50.80		50.70 / 50.61 / 50.42
DESIGN SURFACE LEVEL	52.21		51.97
PIPE CHAINAGE	0.00	5.19 / 5.19	10.44

PIPE DISTANCE: 10.44

These plans are referred to in certificate no. **16746** approved by:
Eric Hausfeld
Registered Certifier
Registration No: BDC 2416
Categories: Certifier – Subdivision, Certifier – Strata, Certifier – Stormwater, Certifier – Road & Drainage, Certifier – Hydraulic (stormwater)
Land Development Certificates
www.LDC.com.au

DIAL 1100 BEFORE YOU DIG

CONSTRUCTION ISSUE

REV.	DATE	AMENDMENT	DESIGN	DRAWN	CHECKED	APPROVED
1	21.01.22	ISSUED FOR CONSTRUCTION	B.M.	J.J.	B.M.	B.M.

SCALES: A1 1:500 / A3 1:1000 (0, 12.5, 25.0m); A1 1:100 / A3 1:200 (0, 2.5, 5.0m)

DESIGN FILE S:\300001\12D\STAGE 2 CC\DESIGN FILE.project
ALL DIMENSIONS ARE IN METRES. DO NOT SCALE

adw johnson
Central Coast
5 Pioneer Avenue,
P.O. Box 3717,
Tuggerah N.S.W. 2259
Phone: (02) 4305 4300
Fax: (02) 4305 4399
email: coast@adwjohnson.com.au
www.adwjohnson.com.au
ABN 62 129 445 398

CLIENT: FRASERS PROPERTY

PROPERTY DESCRIPTION
LOT 100 D.P.1262209 & LOT 1 D.P.859537
EPPING ROAD & LYONPARK ROAD,
MACQUARIE PARK
SSDA 8903

PROJECT: PROPOSED SUBDIVISION

PLAN TITLE: STORMWATER LONGITUDINAL SECTIONS SHEET 3

SURVEYED: ADW Johnson | DATUM: GDA94 M.G.A. ZONE 56 A.H.D. | PROJECT No. 300001(2) – DISCIPLINE ENG – NUMBER 433 | REV. 1

Plotted By: Ben Myles Plot Date: 21/01/22 2:31:57PM Cad File: S:\300001\DRAWINGS\ENGINEERING\CIVIL\STAGE 2 CC ENG\300001(2)-ENG-433.DWG

100mm AT FULL SIZE

This plan includes coloured information. If you have a black and white copy you do not have all of the information. This note is coloured RED.

300001(2)-ENG-434

NOTES: –

1. ALL STORMWATER PITS TO BE CONSTRUCTED IN ACCORDANCE WITH RYDE COUNCILS ENGINEERING CONSTRUCTION SPECIFICATION.
2. ALL PITS DEEPER THAN 1.0m TO HAVE STEP IRONS.
3. ALL STORMWATER PIPE CLASSES ARE TO COMPLY WITH COUNCILS DESIGN AND CONSTRUCTION SPECIFICATIONS. IF THERE ARE DISCREPANCIES BETWEEN COUNCILS SPECIFICATIONS AND THE APPROVED CONSTRUCTION CERTIFICATE PLANS PLEASE NOTIFY THE SUPERINTENDENT IMMEDIATELY. IT IS THE CONTRACTORS RESPONSIBILITY TO USE THE APPROPRIATE CONSTRUCTION METHODOLOGY TO COMPACT AROUND/OVER STORMWATER PIPES AND ENSURE NO CRACKING OF THE STORMWATER PIPES OCCURS.
4. PITS DEEPER THAN 2.5m TO BE CONSTRUCTED IN ACCORDANCE WITH STRUCTURAL ENGINEERS DESIGN.
5. REFER TO DRAWINGS PREPARED BY RARI FOR SEWER DETAILS.
6. ALL GRATES TO HAVE CHILD PROOF LOCK DOWN SYSTEM INSTALLED.

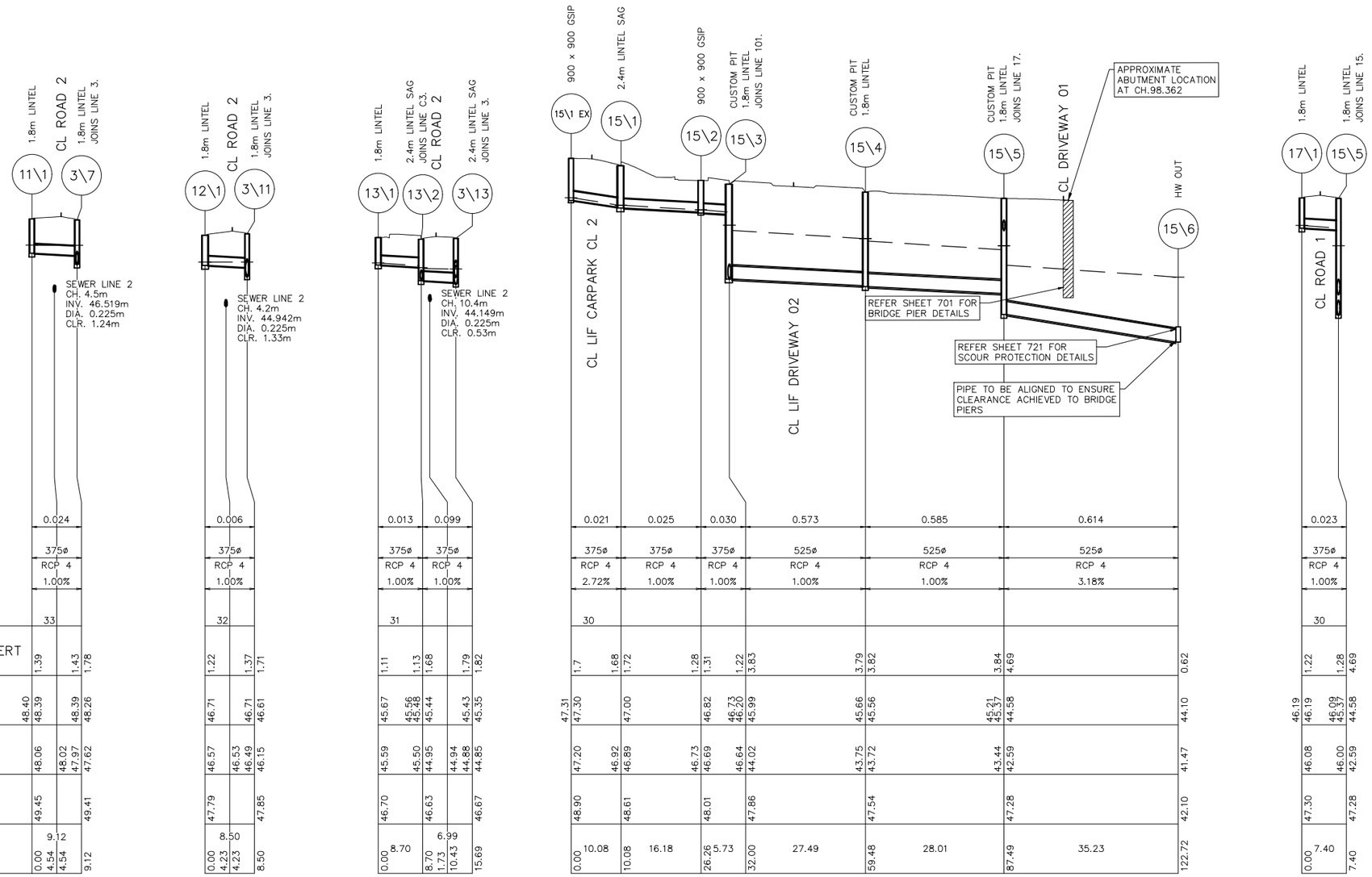

These plans are referred to in certificate no. **16746** approved by:
Eric Hausfeld
Registered Certifier
Registration No: BDC 2416
Categories: Certifier – Subdivision, Certifier – Strata, Certifier – Stormwater, Certifier – Road & Drainage, Certifier – Hydraulic (stormwater)
Land Development Certificates
www.LDC.com.au

DIAL 1100 BEFORE YOU DIG

CONSTRUCTION ISSUE

REV.	DATE	AMENDMENT	DESIGN	DRAWN	CHECKED	APPROVED
1	21.01.22	ISSUED FOR CONSTRUCTION	B.M.	J.J.	B.M.	B.M.

SCALES: A1 1:500 (0, 12.5, 25.0m) A3 1:1000; A1 1:100 (0, 2.5, 5.0m) A3 1:200

DESIGN FILE S:\300001\DESIGN\12D\STAGE 2 CC\DESIGN FILE.project

ALL DIMENSIONS ARE IN METRES. DO NOT SCALE

adw Johnson
Central Coast
5 Pioneer Avenue,
P.O. Box 3717,
Tuggerah N.S.W. 2259
Phone: (02) 4305 4300
Fax: (02) 4305 4399
email: coast@adwjohnson.com.au
www.adwjohnson.com.au
ABN 62 129 445 398

CLIENT: FRASERS PROPERTY

PROPERTY DESCRIPTION: LOT 100 D.P.1262209 & LOT 1 D.P.859537
EPPING ROAD & LYONPARK ROAD,
MACQUARIE PARK
SSDA 8903

SURVEYED: ADW Johnson
DATUM: GDA94 M.G.A. ZONE 56 A.H.D.

PROJECT: PROPOSED SUBDIVISION

PLAN TITLE: STORMWATER LONGITUDINAL SECTIONS
SHEET 4

PROJECT No.	DISCIPLINE	NUMBER	REV.
300001(2) –	ENG –	434	1

Plotted By: Ben Myles Plot Date: 21/01/22 2:32:01PM Cad File: S:\300001\DRAWINGS\ENGINEERING\CIVIL\STAGE 2 CC ENG\300001(2)-ENG-434.DWG

100mm AT FULL SIZE

This plan includes coloured information. If you have a black and white copy you do not have all of the information. This note is coloured RED.

300001(2)-ENG-435

NOTES: –

1. ALL STORMWATER PITS TO BE CONSTRUCTED IN ACCORDANCE WITH RYDE COUNCILS ENGINEERING CONSTRUCTION SPECIFICATION.
2. ALL PITS DEEPER THAN 1.0m TO HAVE STEP IRONS.
3. ALL STORMWATER PIPE CLASSES ARE TO COMPLY WITH COUNCILS DESIGN AND CONSTRUCTION SPECIFICATIONS. IF THERE ARE DISCREPANCIES BETWEEN COUNCILS SPECIFICATIONS AND THE APPROVED CONSTRUCTION CERTIFICATE PLANS PLEASE NOTIFY THE SUPERINTENDENT IMMEDIATELY. IT IS THE CONTRACTORS RESPONSIBILITY TO USE THE APPROPRIATE CONSTRUCTION METHODOLOGY TO COMPACT AROUND/OVER STORMWATER PIPES AND ENSURE NO CRACKING OF THE STORMWATER PIPES OCCURS.
4. PITS DEEPER THAN 2.5m TO BE CONSTRUCTED IN ACCORDANCE WITH STRUCTURAL ENGINEERS DESIGN.
5. REFER TO DRAWINGS PREPARED BY RARI FOR SEWER DETAILS.
6. ALL GRATES TO HAVE CHILD PROOF LOCK DOWN SYSTEM INSTALLED.

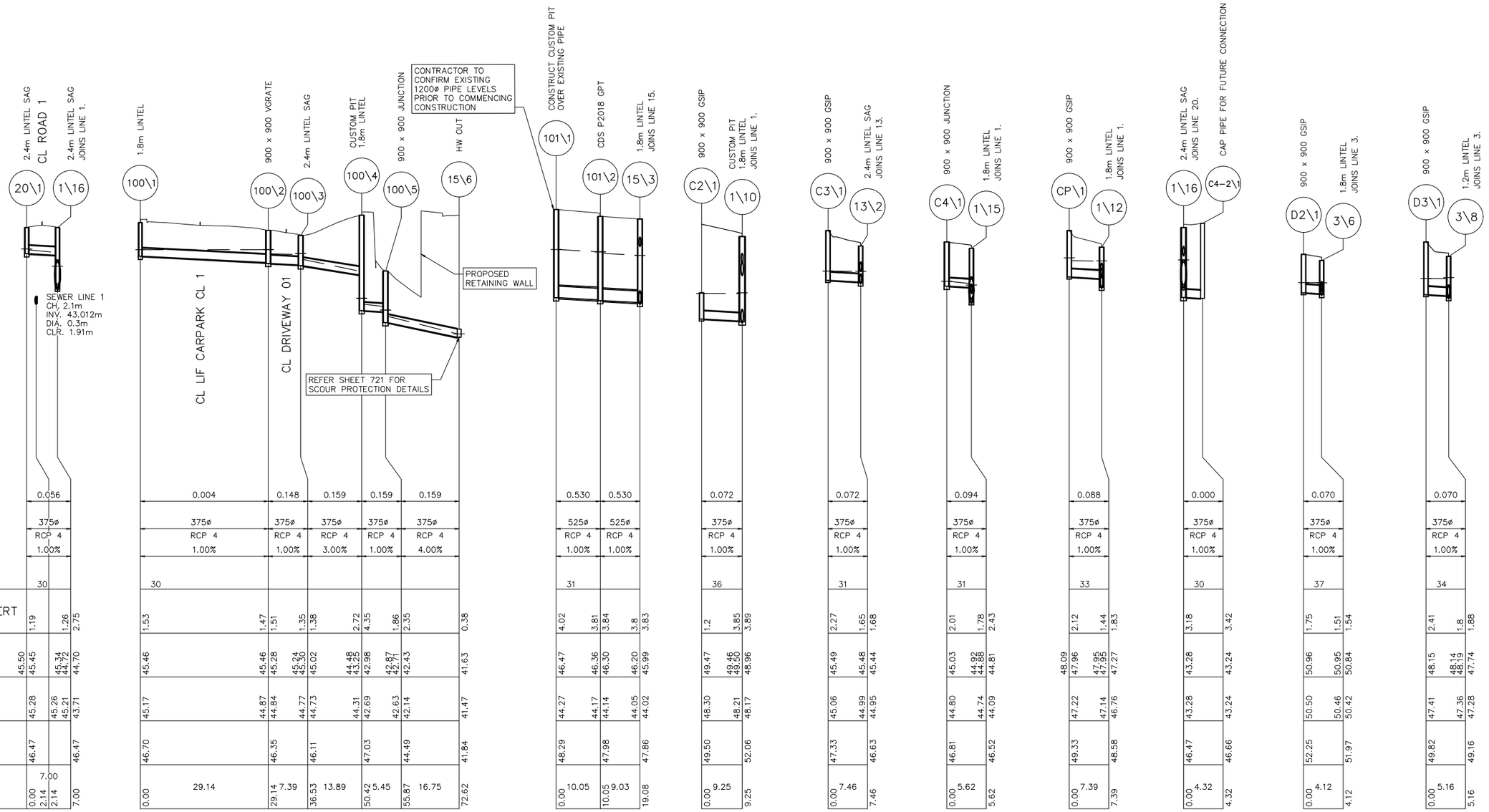

These plans are referred to in certificate no: **16746** approved by:

Eric Hausfeld
Registered Certifier

Registration No: BDC 2416
Categories: Certifier – Subdivision
Certifier – Strata
Certifier – Stormwater
Certifier – Road & Drainage
Certifier – Hydraulic (stormwater)

Land Development Certificates
www.LDC.com.au

DIAL 1100 BEFORE YOU DIG

CONSTRUCTION ISSUE

REV.	DATE	AMENDMENT	DESIGN	DRAWN	CHECKED	APPROVED
1	21.01.22	ISSUED FOR CONSTRUCTION	B.M.	J.J.	B.M.	B.M.

SCALES: A1 1:500 (0, 12.5, 25.0m) A3 1:1000; A1 1:100 (0, 2.5, 5.0m) A3 1:200

ALL DIMENSIONS ARE IN METRES. DO NOT SCALE

adw Johnson
Central Coast
5 Pioneer Avenue,
P.O. Box 3717,
Tuggerah N.S.W. 2259
Phone: (02) 4305 4300
Fax: (02) 4305 4399
email: coast@adwjohnson.com.au
www.adwjohnson.com.au
ABN 62 129 445 398

CLIENT: FRASERS PROPERTY

PROPERTY DESCRIPTION: LOT 100 D.P.1262209 & LOT 1 D.P.859537
EPPING ROAD & LYONPARK ROAD,
MACQUARIE PARK
SSDA 8903

SURVEYED: ADW Johnson
DATUM: GDA94 M.G.A. ZONE 56 A.H.D.

PROJECT: PROPOSED SUBDIVISION

PLAN TITLE: STORMWATER LONGITUDINAL SECTIONS
SHEET 5

PROJECT No.	DISCIPLINE	NUMBER	REV.
300001(2) –	ENG –	435	1

DESIGN FILE S:\300001\DESIGN\12D\STAGE 2 CC\DESIGN FILE.project

Plotted By: Ben Myles Plot Date: 21/01/22 2:32:06PM Cad File: S:\300001\DRAWINGS\ENGINEERING\CIVIL\STAGE 2 CC ENG\300001(2)–ENG–435.DWG

100mm AT FULL SIZE

This plan includes coloured information. If you have a black and white copy you do not have all of the information. This note is coloured RED.

300001(2)-ENG-451

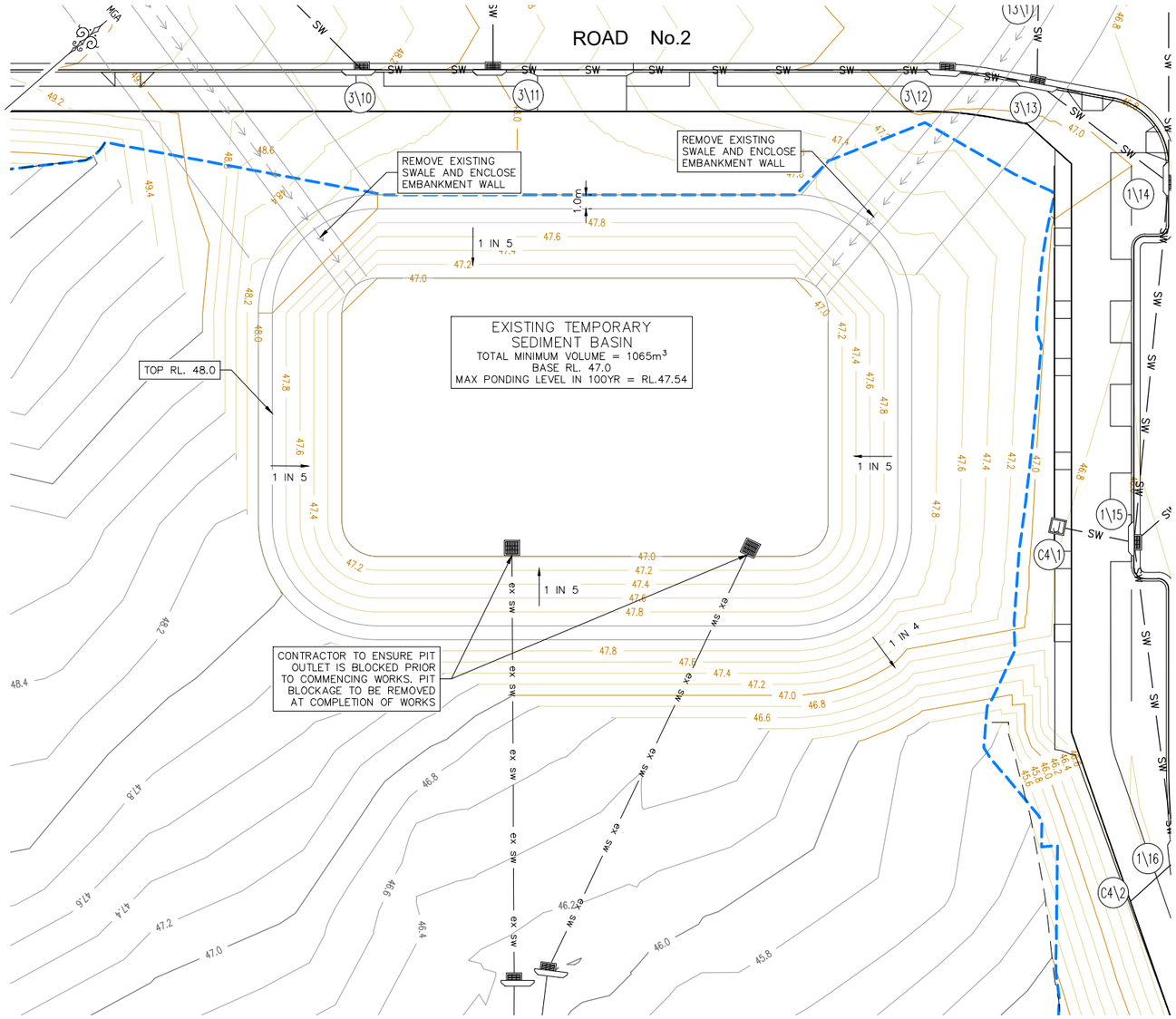

BASIN DETAIL PLAN

SCALE 1:200

LEGEND

- SITE BOUNDARY
- LIMIT OF WORKS BOUNDARY
- PROPOSED LOT BOUNDARY
- EXISTING LOT BOUNDARY
- MAJOR CONTOURS
- MINOR CONTOURS
- EXTENTS OF BATTER
- SW — PROPOSED STORMWATER
- ex sw — EXISTING STORMWATER
- PROPOSED SWALE
- PROPOSED SW PIT
- PROPOSED HEADWALL
- 1\ — PIT LABEL

CONTOUR INTERVAL = 0.2m

Revised Universal Soil Loss Equation (RUSLE)		
Catchment Area (A)	1.46	ha
Settling Zone		
Runoff Coefficient (Cv)	0.5	
85th %, 5 day Rainfall Event (R)	38.8	
Settling Zone Volume	284	m^3
Sediment Zone		
Disturbed Site Area (hectares)	1.46	ha
Rainfall Erosivity Factor, R	3482	
Soil Erodibility Factor, K	0.1	
Slope Length Gradient Factor, LS	1.7	
Erosion Control Practice Factor, P	1.3	
Cover Factor, C	1	
Sediment Zone Volume	147	m^3
Total Storage Required (Settling + Sediment)	431	m^3

NOTE:

REFER SHEET 601 FOR BASIN CATCHMENT DETAILS.

These plans are referred to in certificate no. **16746** approved by:

Eric Hausfeld
Registered Certifier

Registration No: BDC 2416
Categories: Certifier – Subdivision, Certifier – Strata, Certifier – Stormwater, Certifier – Road & Drainage, Certifier – Hydraulic (stormwater)

Land Development Certificates
www.LDC.com.au

BASIN TO BE UTILISED AS SEDIMENT BASIN DURING STAGE 2 CIVIL WORKS. BASIN TO BE MAINTAINED IN ACCORDANCE WITH THE BLUE BOOK.

ONCE THE UPSTREAM CATCHMENT HAS BEEN STABILISED THE BASIN IS TO BE FLOCCULATED, ALL WATER PUMPED OUT AND PIT BLOCKAGE REMOVED.

CONTRACTOR TO PROVIDE TEMPORARY HOARDING AROUND BASIN TO RESTRICT PUBLIC ACCESS TO BASIN ONCE WORKS COMPLETED

DIAL1100 BEFORE YOU DIG

CONSTRUCTION ISSUE

REV.	DATE	AMENDMENT	DESIGN	DRAWN	CHECKED	APPROVED
1	21.01.22	ISSUED FOR CONSTRUCTION	B.M.	J.J.	B.M.	B.M.

SCALES: A1 1:200 — 0 5.0 10.0m — A3 1:400

DESIGN FILE S:\300001\DESIGN\12D\STAGE 2 CC\DESIGN FILE.project

ALL DIMENSIONS ARE IN METRES. DO NOT SCALE

adw Johnson
Central Coast
5 Pioneer Avenue,
P.O. Box 3717,
Tuggerah N.S.W. 2259
Phone: (02) 4305 4300
Fax: (02) 4305 4399
email: coast@adwjohnson.com.au
www.adwjohnson.com.au
ABN 62 129 445 398

CLIENT: FRASERS PROPERTY

PROPERTY DESCRIPTION: LOT 100 D.P.1262209 & LOT 1 D.P.859537, EPPING ROAD & LYONPARK ROAD, MACQUARIE PARK, SSDA 8903

SURVEYED: ADW Johnson
DATUM: GDA94 M.G.A. ZONE 56 A.H.D.

PROJECT: PROPOSED SUBDIVISION

PLAN TITLE: BASIN DETAIL PLAN

PROJECT No. 300001(2) – DISCIPLINE ENG – NUMBER 451 REV. 1

Plotted By: Ben Myles Plot Date: 21/01/22 2:32:16PM Cad File: S:\300001\DRAWINGS\ENGINEERING\CIVIL\STAGE 2 CC ENG\300001(2)-ENG-451.DWG

100mm AT FULL SIZE

This plan includes coloured information. If you have a black and white copy you do not have all of the information. This note is coloured RED.

300001(2)-ENG-481

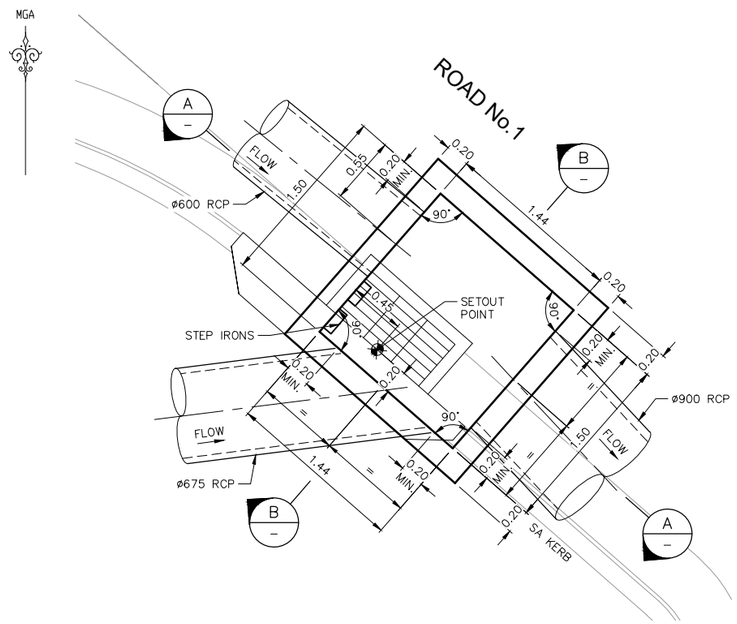

DETAIL PLAN – PIT 1\14

SCALE 1:25

NOTE:

REFER SHEET 495 FOR REINFORCEMENT DETAILS.

NOTE:

LOCKABLE GRATES ARE TO BE INSTALLED TO PITS IN ACCORDANCE WITH RYDE CITY COUNCIL STANDARD DRAWINGS AND SPECIFICATIONS.

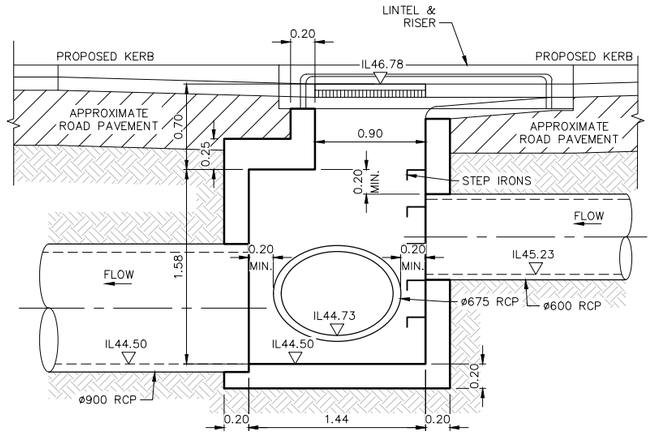

SECTION A

SCALE 1: 25

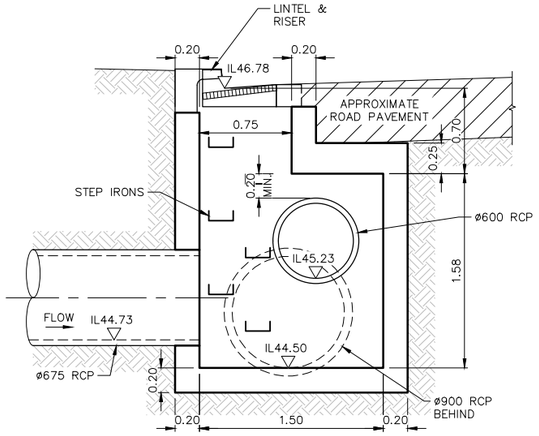

SECTION B

SCALE 1: 25

These plans are referred to in certificate no. **16746** approved by:

Eric Hausfeld
Registered Certifier

Registration No: BDC 2416

Categories: Certifier – Subdivision
Certifier – Strata
Certifier – Stormwater
Certifier – Road & Drainage
Certifier – Hydraulic (stormwater)

Land Development Certificates
www.LDC.com.au

DIAL 1100 BEFORE YOU DIG

CONSTRUCTION ISSUE

REV.	DATE	AMENDMENT	DESIGN	DRAWN	CHECKED	APPROVED
1	21.01.22	ISSUED FOR CONSTRUCTION	B.M.	J.J.	B.M.	B.M.

SCALES: A1 1:25 — 0 0.25 0.50 0.75 1.00 1.25m — A3 1:50

ALL DIMENSIONS ARE IN METRES. DO NOT SCALE

DESIGN FILE S:\300001\DESIGN\12D\STAGE 2 CC\DESIGN FILE.project

adw Johnson
Central Coast
5 Pioneer Avenue,
P.O. Box 3717,
Tuggerah N.S.W. 2259
Phone: (02) 4305 4300
Fax: (02) 4305 4399
email: coast@adwjohnson.com.au
www.adwjohnson.com.au
ABN 62 129 445 398

CLIENT: FRASERS PROPERTY

PROPERTY DESCRIPTION: LOT 100 D.P.1262209 & LOT 1 D.P.859537
EPPING ROAD & LYONPARK ROAD,
MACQUARIE PARK
SSDA 8903

SURVEYED: ADW Johnson

DATUM: GDA94 M.G.A. ZONE 56 A.H.D.

PROJECT: PROPOSED SUBDIVISION

PLAN TITLE: CUSTOM STORMWATER PIT
PIT No. 1\14

PROJECT No.	DISCIPLINE	NUMBER	REV.
300001(2) –	ENG –	481	1

Plotted By: Ben Myles Plot Date: 21/01/22 2:32:24PM Cad File: S:\300001\DRAWINGS\ENGINEERING\CIVIL\STAGE 2 CC ENG\300001(2)-ENG-481.DWG

100mm AT FULL SIZE
This plan includes coloured information. If you have a black and white copy you do not have all of the information. This note is coloured RED.

300001(2)-ENG-482

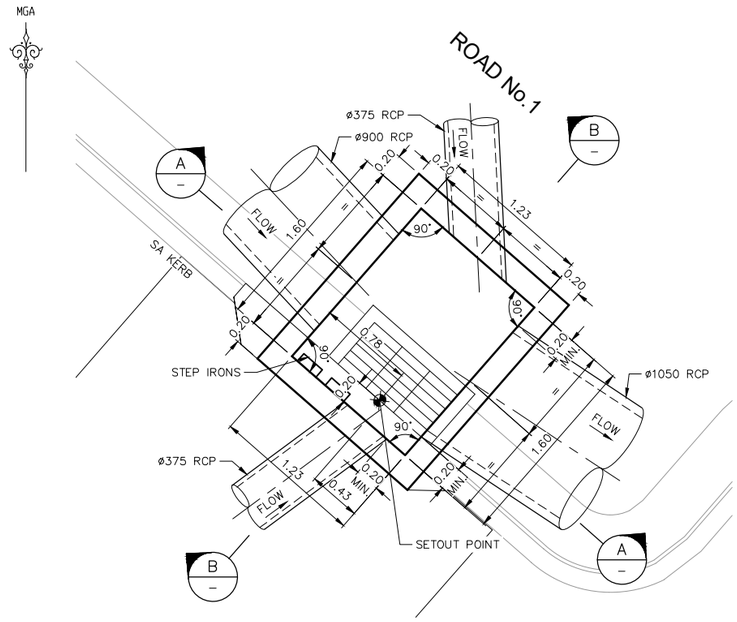

DETAIL PLAN – PIT 1\15

SCALE 1:25

NOTE:

REFER SHEET 495 FOR REINFORCEMENT DETAILS.

NOTE:

LOCKABLE GRATES ARE TO BE INSTALLED TO PITS IN ACCORDANCE WITH RYDE CITY COUNCIL STANDARD DRAWINGS AND SPECIFICATIONS.

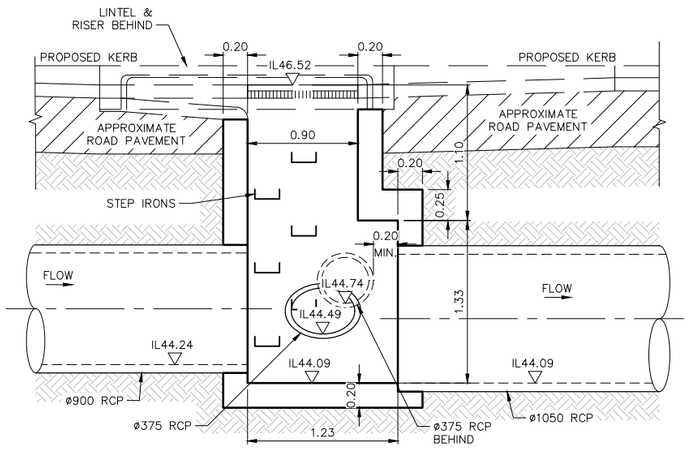

SECTION A

SCALE 1: 25

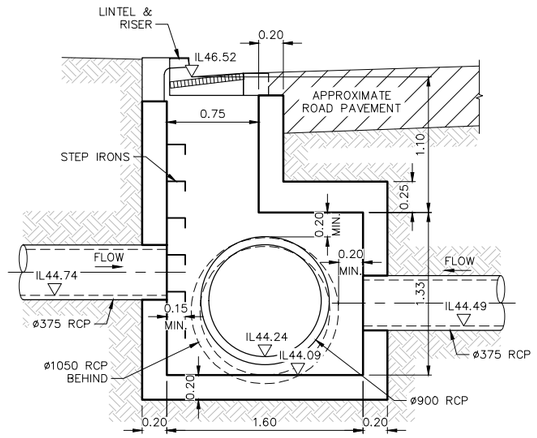

SECTION B

SCALE 1: 25

These plans are referred to in certificate no. **16746** approved by:

Eric Hausfeld
Registered Certifier

Registration No: BDC 2416
Categories: Certifier – Subdivision
Certifier – Strata
Certifier – Stormwater
Certifier – Road & Drainage
Certifier – Hydraulic (stormwater)

Land Development Certificates
www.LDC.com.au

DIAL 1100 BEFORE YOU DIG

CONSTRUCTION ISSUE

REV.	DATE	AMENDMENT	DESIGN	DRAWN	CHECKED	APPROVED
1	21.01.22	ISSUED FOR CONSTRUCTION	B.M.	J.J.	B.M.	B.M.

SCALES: A1 1:25 — 0 0.25 0.50 0.75 1.00 1.25m — A3 1:50

DESIGN FILE S:\300001\DESIGN\12D\STAGE 2 CC\DESIGN FILE.project

ALL DIMENSIONS ARE IN METRES. DO NOT SCALE

adw Johnson
Central Coast
5 Pioneer Avenue,
P.O. Box 3717,
Tuggerah N.S.W. 2259
Phone: (02) 4305 4300
Fax: (02) 4305 4399
email: coast@adwjohnson.com.au
www.adwjohnson.com.au
ABN 62 129 445 398

CLIENT: FRASERS PROPERTY

PROPERTY DESCRIPTION: LOT 100 D.P.1262209 & LOT 1 D.P.859537
EPPING ROAD & LYONPARK ROAD,
MACQUARIE PARK
SSDA 8903

SURVEYED: ADW Johnson
DATUM: GDA94 M.G.A. ZONE 56 A.H.D.

PROJECT: PROPOSED SUBDIVISION

PLAN TITLE: CUSTOM STORMWATER PIT
PIT No. 1\15

PROJECT No.	DISCIPLINE	NUMBER	REV.
300001(2) –	ENG –	482	1

Plotted By: Ben Myles Plot Date: 21/01/22 2:32:30PM Cad File: S:\300001\DRAWINGS\ENGINEERING\CIVIL\STAGE 2 CC ENG\300001(2)-ENG-482.DWG

100mm AT FULL SIZE

This plan includes coloured information. If you have a black and white copy you do not have all of the information. This note is coloured RED.

300001(2)-ENG-483

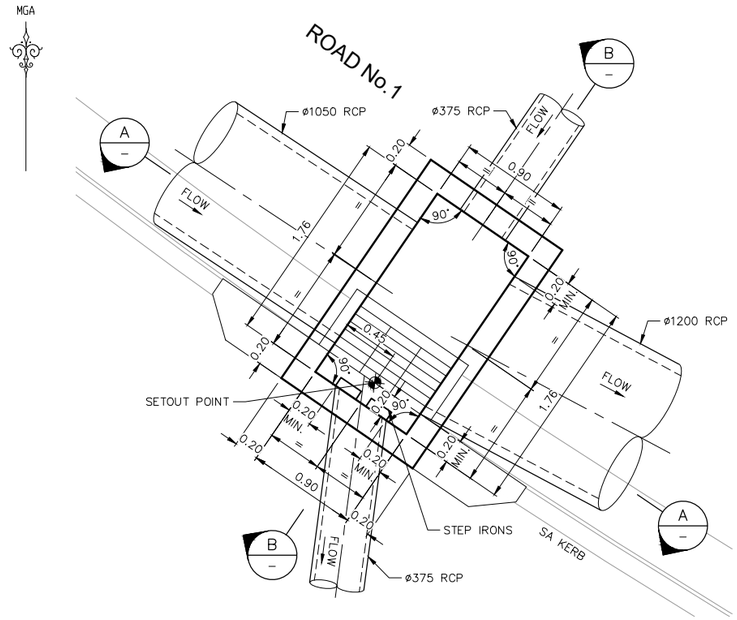

DETAIL PLAN – PIT 1\16

SCALE 1:25

NOTE:

REFER SHEET 495 FOR REINFORCEMENT DETAILS.

NOTE:

LOCKABLE GRATES ARE TO BE INSTALLED TO PITS IN ACCORDANCE WITH RYDE CITY COUNCIL STANDARD DRAWINGS AND SPECIFICATIONS.

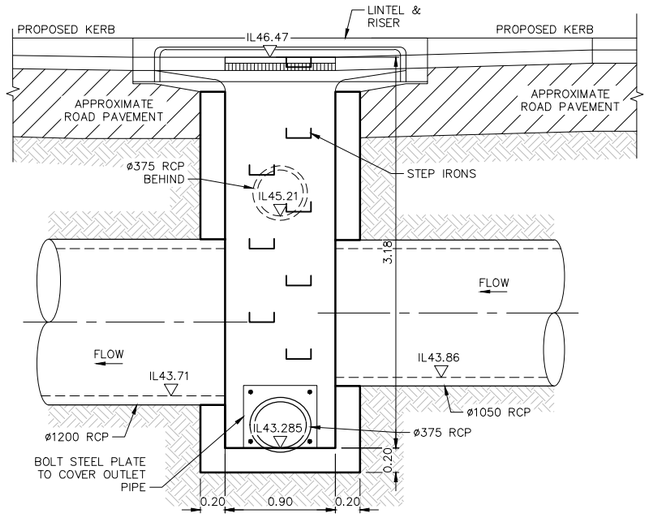

SECTION A

SCALE 1: 25

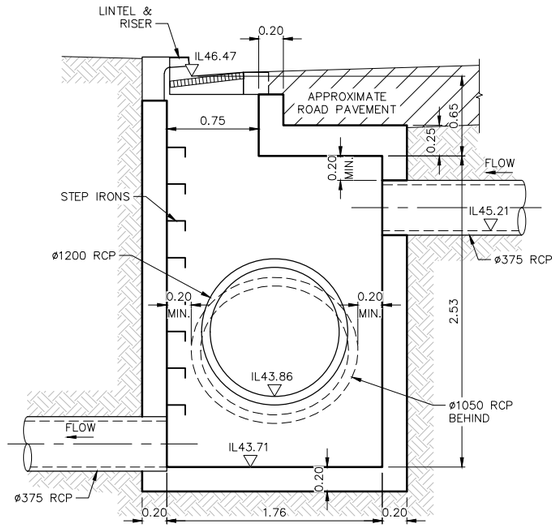

SECTION B

SCALE 1: 25

These plans are referred to in certificate no. **16746** approved by:

Eric Hausfeld
Registered Certifier

Registration No: BDC 2416
Categories: Certifier – Subdivision
Certifier – Strata
Certifier – Stormwater
Certifier – Road & Drainage
Certifier – Hydraulic (stormwater)

Land Development Certificates
www.LDC.com.au

DIAL 1100 BEFORE YOU DIG

CONSTRUCTION ISSUE

REV.	DATE	AMENDMENT	DESIGN	DRAWN	CHECKED	APPROVED
1	21.01.22	ISSUED FOR CONSTRUCTION	B.M.	J.J.	B.M.	B.M.

SCALES: A1 1:25 — 0 0.25 0.50 0.75 1.00 1.25m — A3 1:50

DESIGN FILE S:\300001\DESIGN\12D\STAGE 2 CC\DESIGN FILE.project

ALL DIMENSIONS ARE IN METRES. DO NOT SCALE

adw Johnson
Central Coast
5 Pioneer Avenue,
P.O. Box 3717,
Tuggerah N.S.W. 2259
Phone: (02) 4305 4300
Fax: (02) 4305 4399
email: coast@adwjohnson.com.au
www.adwjohnson.com.au
ABN 62 129 445 398

CLIENT: FRASERS PROPERTY

PROPERTY DESCRIPTION: LOT 100 D.P.1262209 & LOT 1 D.P.859537
EPPING ROAD & LYONPARK ROAD,
MACQUARIE PARK
SSDA 8903

SURVEYED: ADW Johnson
DATUM: GDA94 M.G.A. ZONE 56 A.H.D.

PROJECT: PROPOSED SUBDIVISION

PLAN TITLE: CUSTOM STORMWATER PIT
PIT No. 1\16

PROJECT No.	DISCIPLINE	NUMBER	REV.
300001(2) –	ENG –	483	1

Plotted By: Ben Myles Plot Date: 21/01/22 2:32:36PM Cad File: S:\300001\DRAWINGS\ENGINEERING\CIVIL\STAGE 2 CC ENG\300001(2)-ENG-483.DWG

100mm AT FULL SIZE

This plan includes coloured information. If you have a black and white copy you do not have all of the information. This note is coloured RED.

300001(2)-ENG-484

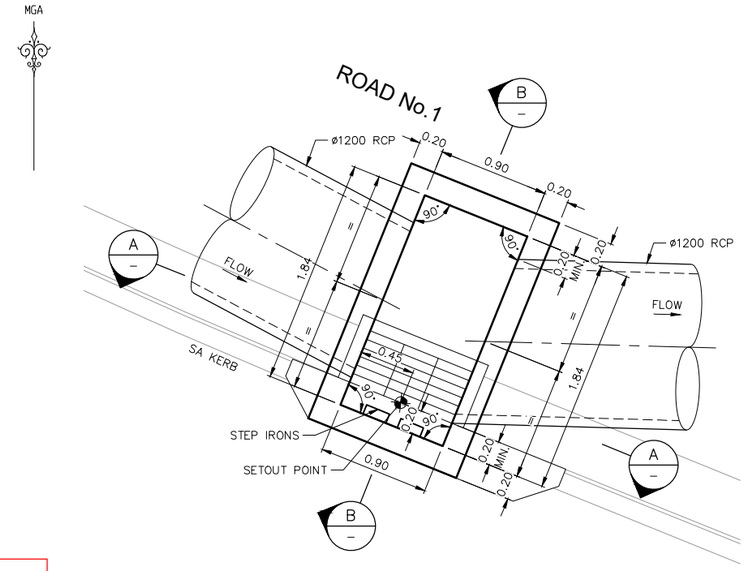

NOTE:

REFER SHEET 495 FOR REINFORCEMENT DETAILS.

DETAIL PLAN – PIT 1\17

SCALE 1:25

NOTE:

LOCKABLE GRATES ARE TO BE INSTALLED TO PITS IN ACCORDANCE WITH RYDE CITY COUNCIL STANDARD DRAWINGS AND SPECIFICATIONS.

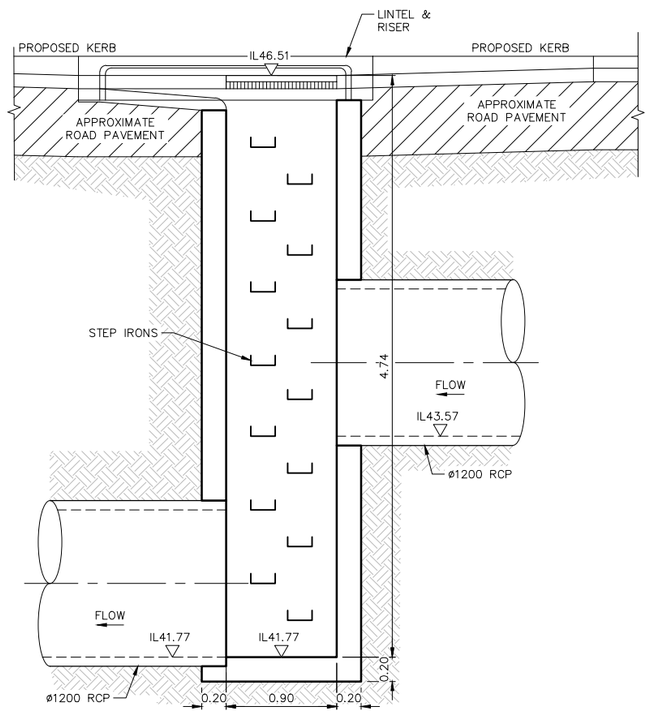

SECTION A

SCALE 1: 25

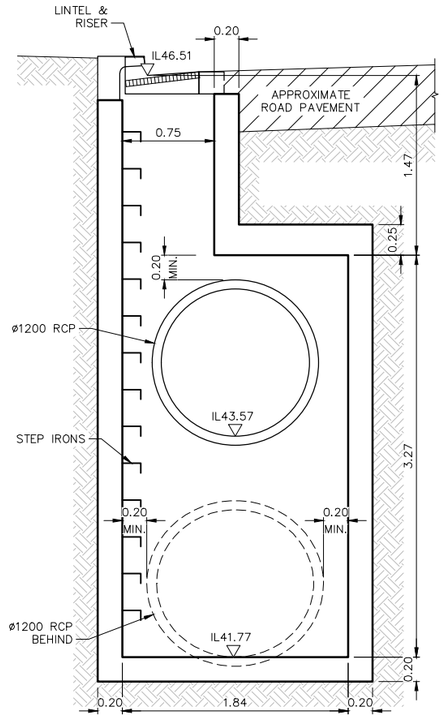

SECTION B

SCALE 1: 25

These plans are referred to in certificate no. **16746** approved by:

Eric Hausfeld
Registered Certifier

Registration No: BDC 2416
Categories: Certifier – Subdivision
Certifier – Strata
Certifier – Stormwater
Certifier – Road & Drainage
Certifier – Hydraulic (stormwater)

Land Development Certificates
www.LDC.com.au

DIAL 1100 BEFORE YOU DIG

CONSTRUCTION ISSUE

REV.	DATE	AMENDMENT	DESIGN	DRAWN	CHECKED	APPROVED
1	21.01.22	ISSUED FOR CONSTRUCTION	B.M.	J.J.	B.M.	B.M.

SCALES: A1 1:25 — 0 0.25 0.50 0.75 1.00 1.25m — A3 1:50

ALL DIMENSIONS ARE IN METRES. DO NOT SCALE

adw Johnson
Central Coast
5 Pioneer Avenue,
P.O. Box 3717,
Tuggerah N.S.W. 2259
Phone: (02) 4305 4300
Fax: (02) 4305 4399
email: coast@adwjohnson.com.au
www.adwjohnson.com.au
ABN 62 129 445 398

CLIENT: FRASERS PROPERTY

PROPERTY DESCRIPTION: LOT 100 D.P.1262209 & LOT 1 D.P.859537
EPPING ROAD & LYONPARK ROAD,
MACQUARIE PARK
SSDA 8903

SURVEYED: ADW Johnson
DATUM: GDA94 M.G.A. ZONE 56 A.H.D.

PROJECT: PROPOSED SUBDIVISION

PLAN TITLE: CUSTOM STORMWATER PIT
PIT No. 1\17

PROJECT No. 300001(2) – DISCIPLINE ENG – NUMBER 484 REV. 1

DESIGN FILE S:\300001\DESIGN\12D\STAGE 2 CC\DESIGN FILE.project

Plotted By: Ben Myles Plot Date: 21/01/22 2:32:42PM Cad File: S:\300001\DRAWINGS\ENGINEERING\CIVIL\STAGE 2 CC ENG\300001(2)-ENG-484.DWG

100mm AT FULL SIZE

This plan includes coloured information. If you have a black and white copy you do not have all of the information. This note is coloured RED.

300001(2)-ENG-485

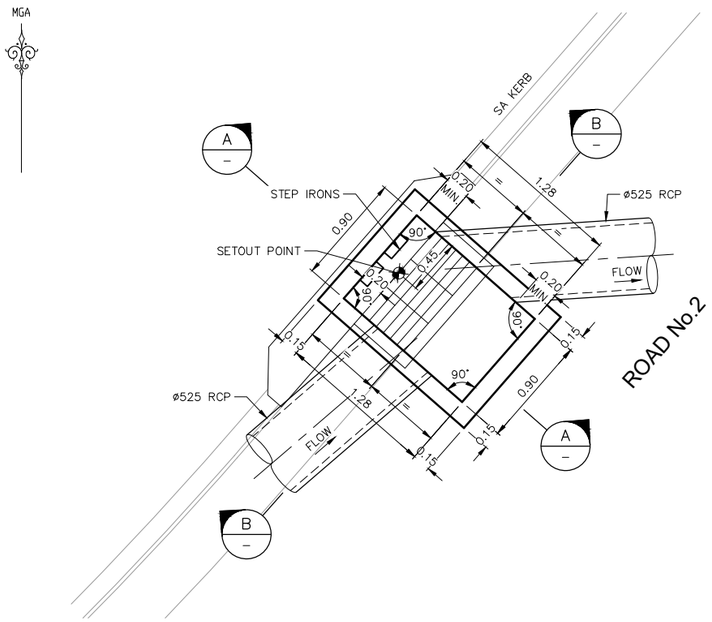

DETAIL PLAN – PIT 3\9
SCALE 1:25

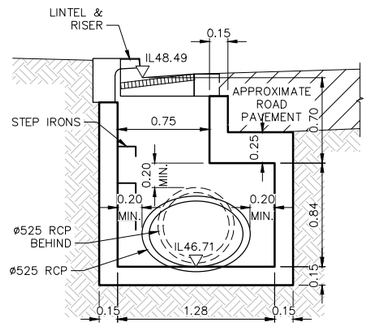

SECTION A
SCALE 1: 25

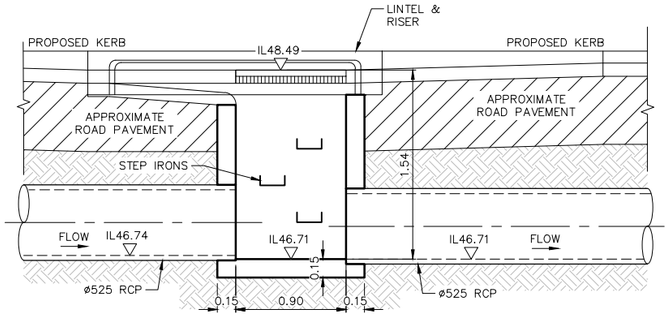

SECTION B
SCALE 1: 25

NOTE:

REFER SHEET 495 FOR REINFORCEMENT DETAILS.

NOTE:

LOCKABLE GRATES ARE TO BE INSTALLED TO PITS IN ACCORDANCE WITH RYDE CITY COUNCIL STANDARD DRAWINGS AND SPECIFICATIONS.

These plans are referred to in certificate no. **16746** approved by:
Eric Hausfeld
Registered Certifier
Registration No: BDC 2416
Categories: Certifier – Subdivision
Certifier – Strata
Certifier – Stormwater
Certifier – Road & Drainage
Certifier – Hydraulic (stormwater)
Land Development Certificates
www.LDC.com.au

DIAL 1100 BEFORE YOU DIG

CONSTRUCTION ISSUE

REV.	DATE	AMENDMENT	DESIGN	DRAWN	CHECKED	APPROVED
1	21.01.22	ISSUED FOR CONSTRUCTION	B.M.	J.J.	B.M.	B.M.

SCALES: A1 1:25 — 0 0.25 0.50 0.75 1.00 1.25m — A3 1:50

DESIGN FILE S:\300001\DESIGN\12D\STAGE 2 CC\DESIGN FILE.project

ALL DIMENSIONS ARE IN METRES. DO NOT SCALE

adw Johnson
Central Coast
5 Pioneer Avenue,
P.O. Box 3717,
Tuggerah N.S.W. 2259
Phone: (02) 4305 4300
Fax: (02) 4305 4399
email: coast@adwjohnson.com.au
www.adwjohnson.com.au
ABN 62 129 445 398

CLIENT: FRASERS PROPERTY

PROPERTY DESCRIPTION
LOT 100 D.P.1262209 & LOT 1 D.P.859537
EPPING ROAD & LYONPARK ROAD,
MACQUARIE PARK
SSDA 8903

SURVEYED: ADW Johnson
DATUM: GDA94 M.G.A. ZONE 56 A.H.D.

PROJECT: PROPOSED SUBDIVISION

PLAN TITLE: CUSTOM STORMWATER PIT
PIT No. 3\9

PROJECT No.	DISCIPLINE	NUMBER	REV.
300001(2) –	ENG –	485	1

Plotted By: Ben Myles Plot Date: 21/01/22 2:32:48PM Cad File: S:\300001\DRAWINGS\ENGINEERING\CIVIL\STAGE 2 CC ENG\300001(2)-ENG-485.DWG

100mm AT FULL SIZE

This plan includes coloured information. If you have a black and white copy you do not have all of the information. This note is coloured RED.

300001(2)-ENG-486

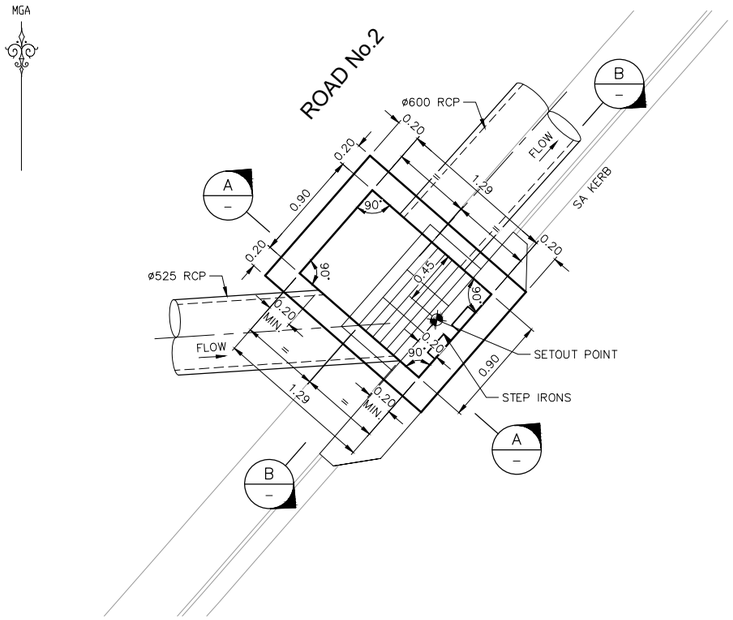

DETAIL PLAN – PIT 3\10
SCALE 1:25

NOTE:

REFER SHEET 495 FOR REINFORCEMENT DETAILS.

NOTE:

LOCKABLE GRATES ARE TO BE INSTALLED TO PITS IN ACCORDANCE WITH RYDE CITY COUNCIL STANDARD DRAWINGS AND SPECIFICATIONS.

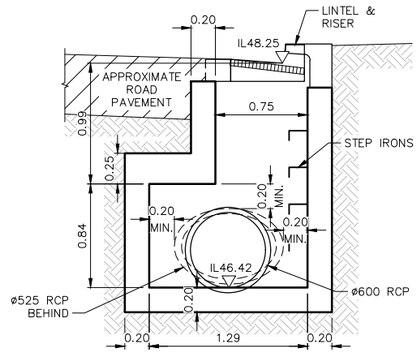

SECTION A
SCALE 1: 25

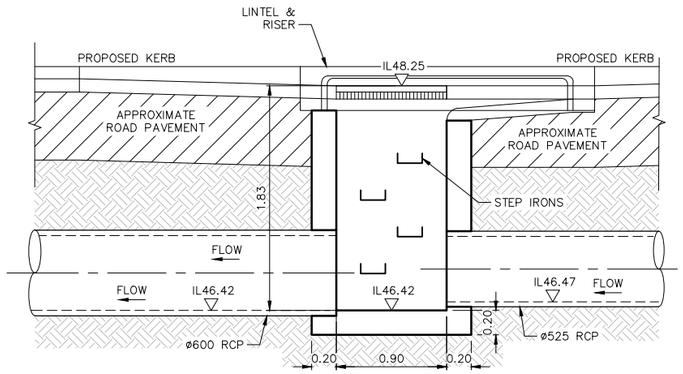

SECTION B
SCALE 1: 25

These plans are referred to in certificate no. **16746** approved by:
Eric Hausfeld
Registered Certifier
Registration No: BDC 2416
Categories: Certifier – Subdivision
Certifier – Strata
Certifier – Stormwater
Certifier – Road & Drainage
Certifier – Hydraulic (stormwater)
Land Development Certificates
www.LDC.com.au

DIAL 1100 BEFORE YOU DIG

CONSTRUCTION ISSUE

REV.	DATE	AMENDMENT	DESIGN	DRAWN	CHECKED	APPROVED
1	21.01.22	ISSUED FOR CONSTRUCTION	B.M.	J.J.	B.M.	B.M.

SCALES: A1 1:25 — 0 0.25 0.50 0.75 1.00 1.25m — A3 1:50

DESIGN FILE S:\300001\DESIGN\12D\STAGE 2 CC\DESIGN FILE.project

ALL DIMENSIONS ARE IN METRES. DO NOT SCALE

adw Johnson
Central Coast
5 Pioneer Avenue,
P.O. Box 3717,
Tuggerah N.S.W. 2259
Phone: (02) 4305 4300
Fax: (02) 4305 4399
email: coast@adwjohnson.com.au
www.adwjohnson.com.au
ABN 62 129 445 398

CLIENT: FRASERS PROPERTY

PROPERTY DESCRIPTION
LOT 100 D.P.1262209 & LOT 1 D.P.859537
EPPING ROAD & LYONPARK ROAD,
MACQUARIE PARK
SSDA 8903

SURVEYED: ADW Johnson
DATUM: GDA94 M.G.A. ZONE 56 A.H.D.

PROJECT: PROPOSED SUBDIVISION

PLAN TITLE: CUSTOM STORMWATER PIT
PIT No. 3\10

PROJECT No.	DISCIPLINE	NUMBER	REV.
300001(2) –	ENG –	486	1

Plotted By: Ben Myles Plot Date: 21/01/22 2:32:53PM Cad File: S:\300001\DRAWINGS\ENGINEERING\CIVIL\STAGE 2 CC ENG\300001(2)-ENG-486.DWG

100mm AT FULL SIZE

This plan includes coloured information. If you have a black and white copy you do not have all of the information. This note is coloured RED.

300001(2)-ENG-487

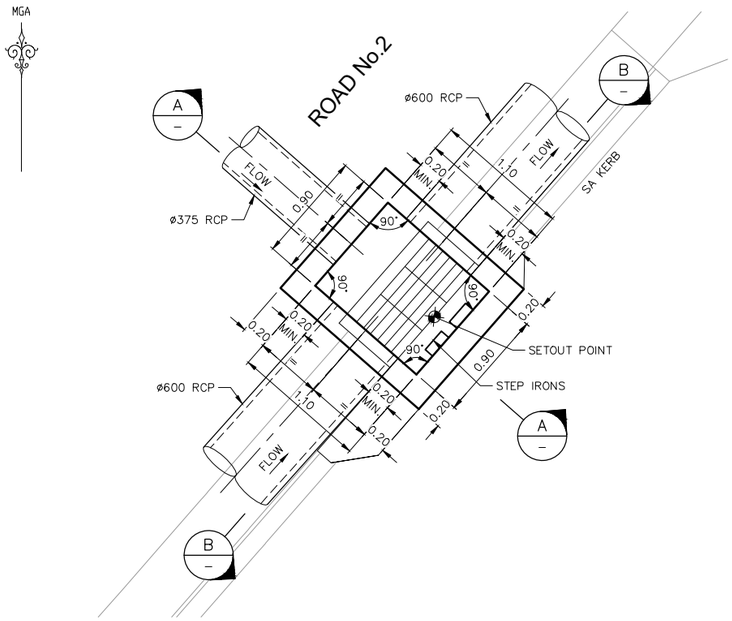

DETAIL PLAN – PIT 3\11
SCALE 1:25

NOTE:

REFER SHEET 495 FOR REINFORCEMENT DETAILS.

NOTE:

LOCKABLE GRATES ARE TO BE INSTALLED TO PITS IN ACCORDANCE WITH RYDE CITY COUNCIL STANDARD DRAWINGS AND SPECIFICATIONS.

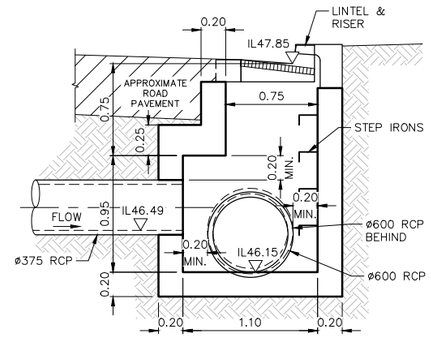

SECTION A
SCALE 1: 25

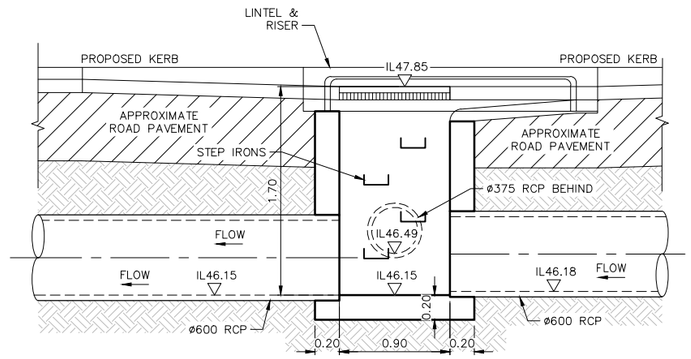

SECTION B
SCALE 1: 25

These plans are referred to in certificate no. **16746** approved by:
Eric Hausfeld
Registered Certifier
Registration No: BDC 2416
Categories: Certifier – Subdivision, Certifier – Strata, Certifier – Stormwater, Certifier – Road & Drainage, Certifier – Hydraulic (stormwater)
Land Development Certificates
www.LDC.com.au

DIAL 1100 BEFORE YOU DIG

CONSTRUCTION ISSUE

REV.	DATE	AMENDMENT	DESIGN	DRAWN	CHECKED	APPROVED
1	21.01.22	ISSUED FOR CONSTRUCTION	B.M.	J.J.	B.M.	B.M.

SCALES: A1 1:25 — 0 0.25 0.50 0.75 1.00 1.25m — A3 1:50

DESIGN FILE S:\300001\DESIGN\12D\STAGE 2 CC\DESIGN FILE.project

ALL DIMENSIONS ARE IN METRES. DO NOT SCALE

adw Johnson
Central Coast
5 Pioneer Avenue,
P.O. Box 3717,
Tuggerah N.S.W. 2259
Phone: (02) 4305 4300
Fax: (02) 4305 4399
email: coast@adwjohnson.com.au
www.adwjohnson.com.au
ABN 62 129 445 398

CLIENT: FRASERS PROPERTY

PROPERTY DESCRIPTION: LOT 100 D.P.1262209 & LOT 1 D.P.859537
EPPING ROAD & LYONPARK ROAD,
MACQUARIE PARK
SSDA 8903

SURVEYED: ADW Johnson
DATUM: GDA94 M.G.A. ZONE 56 A.H.D.

PROJECT: PROPOSED SUBDIVISION

PLAN TITLE: CUSTOM STORMWATER PIT
PIT No. 3\11

PROJECT No.	DISCIPLINE	NUMBER	REV.
300001(2) –	ENG –	487	1

Plotted By: Ben Myles Plot Date: 21/01/22 2:32:59PM Cad File: S:\300001\DRAWINGS\ENGINEERING\CIVIL\STAGE 2 CC ENG\300001(2)-ENG-487.DWG

100mm AT FULL SIZE

This plan includes coloured information. If you have a black and white copy you do not have all of the information. This note is coloured RED.

300001(2)-ENG-488

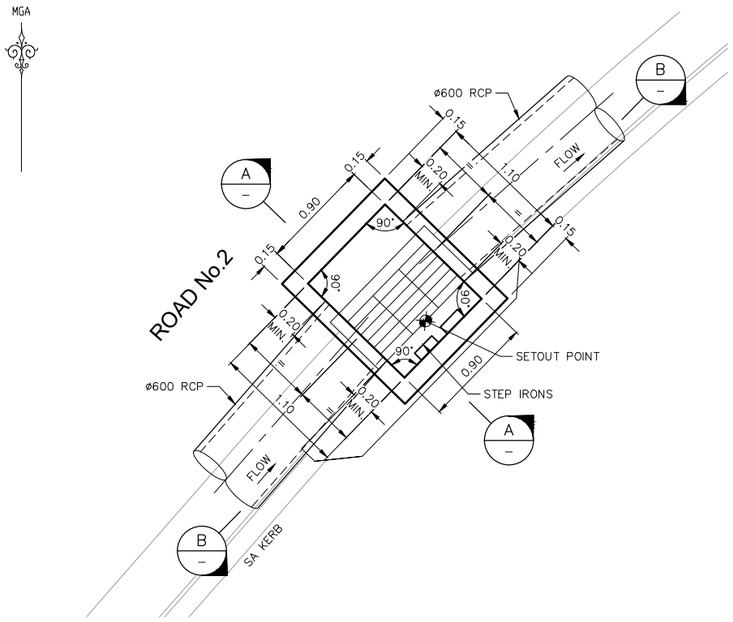

DETAIL PLAN – PIT 3\12
SCALE 1:25

NOTE:

REFER SHEET 495 FOR REINFORCEMENT DETAILS.

NOTE:

LOCKABLE GRATES ARE TO BE INSTALLED TO PITS IN ACCORDANCE WITH RYDE CITY COUNCIL STANDARD DRAWINGS AND SPECIFICATIONS.

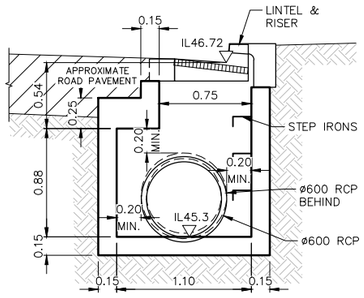

SECTION A
SCALE 1: 25

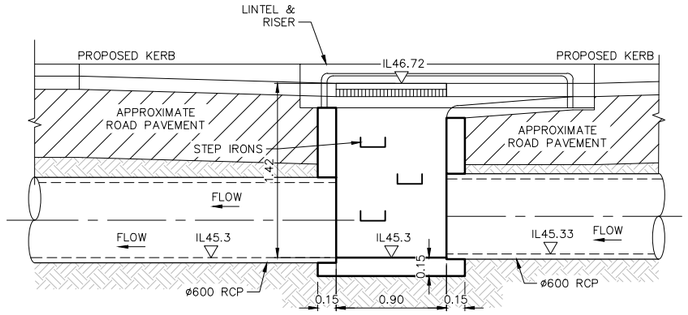

SECTION B
SCALE 1: 25

These plans are referred to in certificate no. **16746** approved by:
Eric Hausfeld
Registered Certifier
Registration No: BDC 2416
Categories: Certifier – Subdivision, Certifier – Strata, Certifier – Stormwater, Certifier – Road & Drainage, Certifier – Hydraulic (stormwater)
Land Development Certificates
www.LDC.com.au

DIAL1100 BEFORE YOU DIG

CONSTRUCTION ISSUE

REV.	DATE	AMENDMENT	DESIGN	DRAWN	CHECKED	APPROVED
1	21.01.22	ISSUED FOR CONSTRUCTION	B.M.	J.J.	B.M.	B.M.

SCALES: A1 1:25 — 0 0.25 0.50 0.75 1.00 1.25m — A3 1:50

DESIGN FILE S:\300001\DESIGN\12D\STAGE 2 CC\DESIGN FILE.project

ALL DIMENSIONS ARE IN METRES. DO NOT SCALE

adw Johnson
Central Coast
5 Pioneer Avenue,
P.O. Box 3717,
Tuggerah N.S.W. 2259
Phone: (02) 4305 4300
Fax: (02) 4305 4399
email: coast@adwjohnson.com.au
www.adwjohnson.com.au
ABN 62 129 445 398

CLIENT: FRASERS PROPERTY

PROPERTY DESCRIPTION: LOT 100 D.P.1262209 & LOT 1 D.P.859537
EPPING ROAD & LYONPARK ROAD,
MACQUARIE PARK
SSDA 8903

SURVEYED: ADW Johnson
DATUM: GDA94 M.G.A. ZONE 56 A.H.D.

PROJECT: PROPOSED SUBDIVISION

PLAN TITLE: CUSTOM STORMWATER PIT
PIT No. 3\12

PROJECT No.	DISCIPLINE	NUMBER	REV.
300001(2) –	ENG –	488	1

Plotted By: Ben Myles Plot Date: 21/01/22 2:33:04PM Cad File: S:\300001\DRAWINGS\ENGINEERING\CIVIL\STAGE 2 CC ENG\300001(2)-ENG-488.DWG

100mm AT FULL SIZE

This plan includes coloured information. If you have a black and white copy you do not have all of the information. This note is coloured RED.

300001(2)-ENG-489

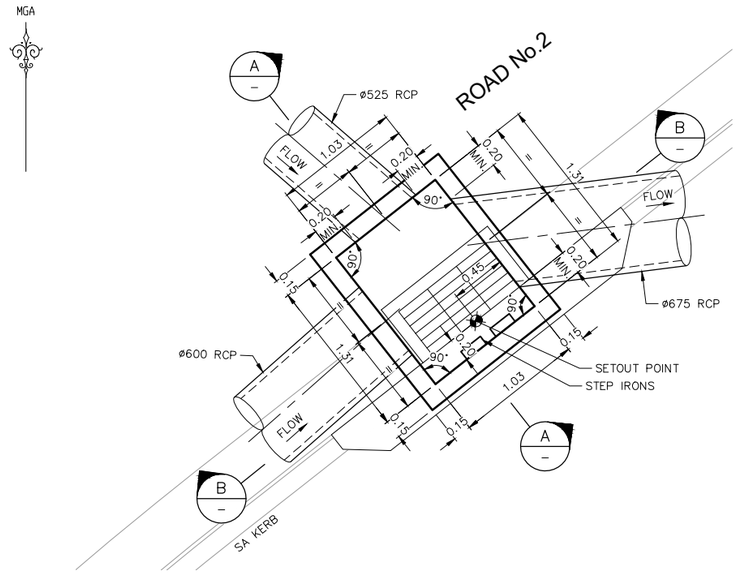

DETAIL PLAN – PIT 3\13

SCALE 1:25

NOTE:

REFER SHEET 495 FOR REINFORCEMENT DETAILS.

NOTE:

LOCKABLE GRATES ARE TO BE INSTALLED TO PITS IN ACCORDANCE WITH RYDE CITY COUNCIL STANDARD DRAWINGS AND SPECIFICATIONS.

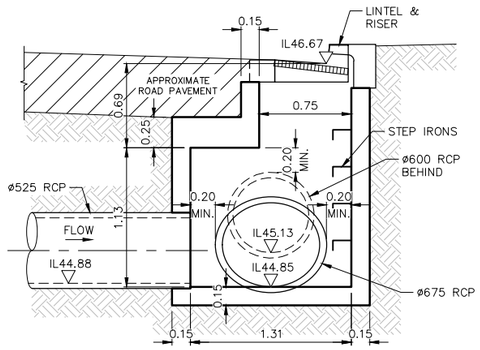

SECTION A

SCALE 1: 25

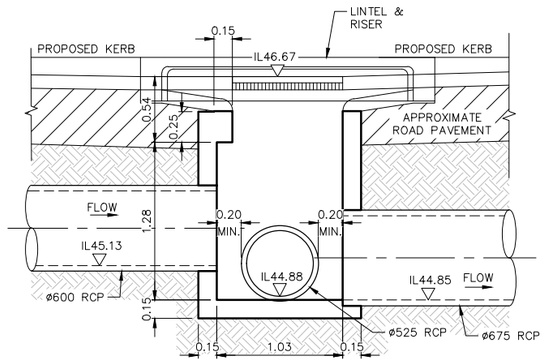

SECTION B

SCALE 1: 25

These plans are referred to in certificate no. **16746** approved by:

Eric Hausfeld
Registered Certifier

Registration No: BDC 2416

Categories: Certifier – Subdivision
Certifier – Strata
Certifier – Stormwater
Certifier – Road & Drainage
Certifier – Hydraulic (stormwater)

Land Development Certificates
www.LDC.com.au

DIAL 1100 BEFORE YOU DIG

CONSTRUCTION ISSUE

REV.	DATE	AMENDMENT	DESIGN	DRAWN	CHECKED	APPROVED
1	21.01.22	ISSUED FOR CONSTRUCTION	B.M.	J.J.	B.M.	B.M.

SCALES: A1 1:25 — 0 0.25 0.50 0.75 1.00 1.25m — A3 1:50

DESIGN FILE S:\300001\DESIGN\12D\STAGE 2 CC\DESIGN FILE.project

ALL DIMENSIONS ARE IN METRES. DO NOT SCALE

adw Johnson
Central Coast
5 Pioneer Avenue,
P.O. Box 3717,
Tuggerah N.S.W. 2259
Phone: (02) 4305 4300
Fax: (02) 4305 4399
email: coast@adwjohnson.com.au
www.adwjohnson.com.au
ABN 62 129 445 398

CLIENT: FRASERS PROPERTY

PROPERTY DESCRIPTION: LOT 100 D.P.1262209 & LOT 1 D.P.859537
EPPING ROAD & LYONPARK ROAD,
MACQUARIE PARK
SSDA 8903

SURVEYED: ADW Johnson

DATUM: GDA94 M.G.A. ZONE 56 A.H.D.

PROJECT: PROPOSED SUBDIVISION

PLAN TITLE: CUSTOM STORMWATER PIT
PIT No. 3\13

PROJECT No.	DISCIPLINE	NUMBER	REV.
300001(2) –	ENG –	489	1

Plotted By: Ben Myles Plot Date: 21/01/22 2:33:10PM Cad File: S:\300001\DRAWINGS\ENGINEERING\CIVIL\STAGE 2 CC ENG\300001(2)-ENG-489.DWG

100mm AT FULL SIZE

This plan includes coloured information. If you have a black and white copy you do not have all of the information. This note is coloured RED.

300001(2)-ENG-490

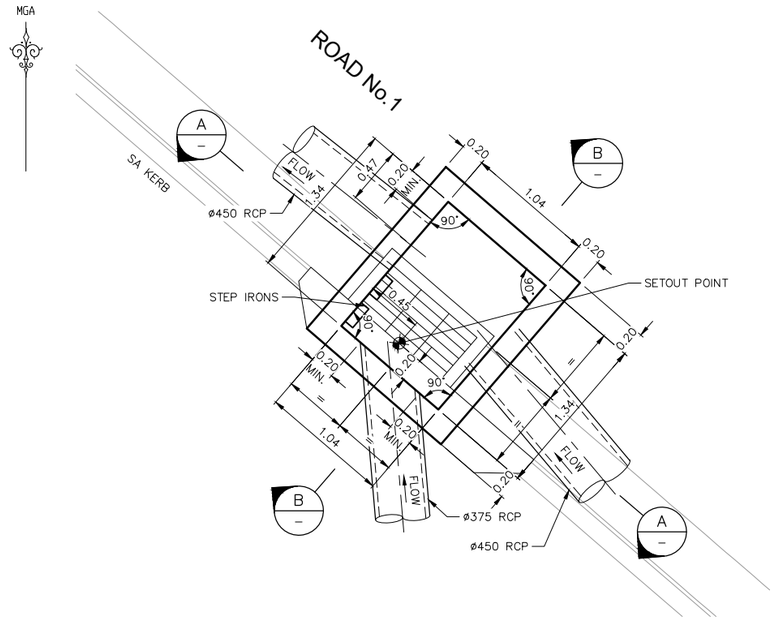

DETAIL PLAN – PIT 15\3

SCALE 1:25

NOTE:

LOCKABLE GRATES ARE TO BE INSTALLED TO PITS IN ACCORDANCE WITH RYDE CITY COUNCIL STANDARD DRAWINGS AND SPECIFICATIONS.

NOTE:

REFER SHEET 495 FOR REINFORCEMENT DETAILS.

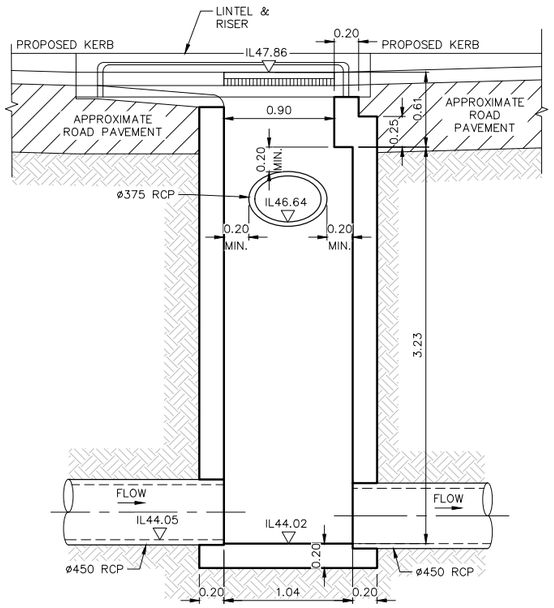

SECTION A

SCALE 1: 25

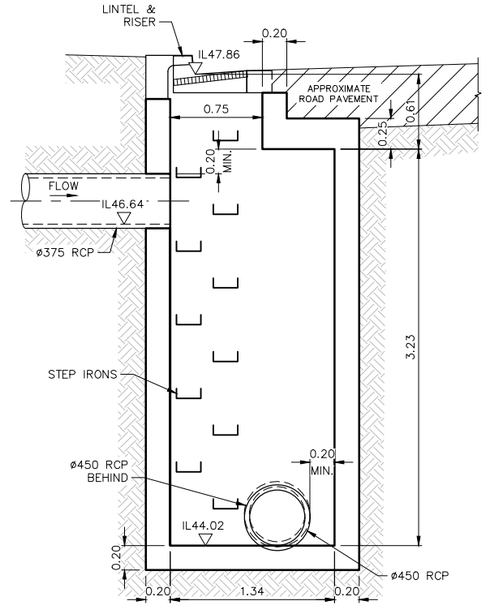

SECTION B

SCALE 1: 25

These plans are referred to in certificate no. **16746** approved by:

Eric Hausfeld
Registered Certifier

Registration No: BDC 2416
Categories: Certifier – Subdivision
Certifier – Strata
Certifier – Stormwater
Certifier – Road & Drainage
Certifier – Hydraulic (stormwater)

Land Development Certificates
www.LDC.com.au

DIAL1100 BEFORE YOU DIG

CONSTRUCTION ISSUE

REV.	DATE	AMENDMENT	DESIGN	DRAWN	CHECKED	APPROVED
1	21.01.22	ISSUED FOR CONSTRUCTION	B.M.	J.J.	B.M.	B.M.

SCALES: A1 1:25 — 0 0.25 0.50 0.75 1.00 1.25m — A3 1:50

DESIGN FILE S:\300001\DESIGN\12D\STAGE 2 CC\DESIGN FILE.project

ALL DIMENSIONS ARE IN METRES. DO NOT SCALE

adw Johnson
Central Coast
5 Pioneer Avenue,
P.O. Box 3717,
Tuggerah N.S.W. 2259
Phone: (02) 4305 4300
Fax: (02) 4305 4399
email: coast@adwjohnson.com.au
www.adwjohnson.com.au
ABN 62 129 445 398

CLIENT: FRASERS PROPERTY

PROPERTY DESCRIPTION: LOT 100 D.P.1262209 & LOT 1 D.P.859537
EPPING ROAD & LYONPARK ROAD,
MACQUARIE PARK
SSDA 8903

SURVEYED: ADW Johnson

DATUM: GDA94 M.G.A. ZONE 56 A.H.D.

PROJECT: PROPOSED SUBDIVISION

PLAN TITLE: CUSTOM STORMWATER PIT
PIT No. 15\3

PROJECT No.	DISCIPLINE	NUMBER	REV.
300001(2) –	ENG –	490	1

Plotted By: Ben Myles Plot Date: 21/01/22 2:33:15PM Cad File: S:\300001\DRAWINGS\ENGINEERING\CIVIL\STAGE 2 CC ENG\300001(2)-ENG-490.DWG

100mm AT FULL SIZE

This plan includes coloured information. If you have a black and white copy you do not have all of the information. This note is coloured RED.

300001(2)-ENG-491

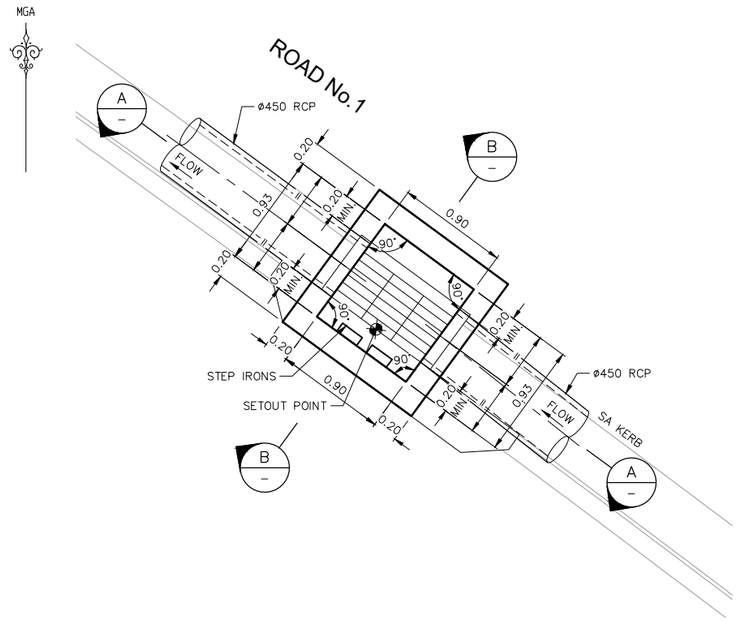

DETAIL PLAN – PIT 15\4

SCALE 1:25

NOTE:

REFER SHEET 495 FOR REINFORCEMENT DETAILS.

NOTE:

LOCKABLE GRATES ARE TO BE INSTALLED TO PITS IN ACCORDANCE WITH RYDE CITY COUNCIL STANDARD DRAWINGS AND SPECIFICATIONS.

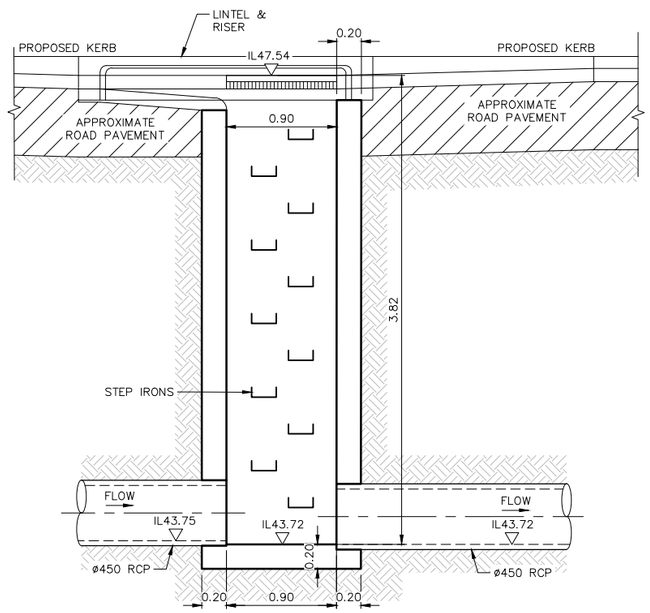

SECTION A

SCALE 1: 25

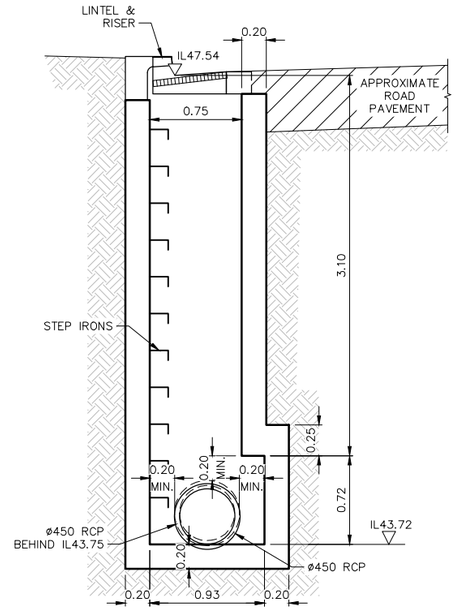

SECTION B

SCALE 1: 25

These plans are referred to in certificate no. **16746** approved by:

Eric Hausfeld
Registered Certifier

Registration No: BDC 2416
Categories: Certifier – Subdivision
Certifier – Strata
Certifier – Stormwater
Certifier – Road & Drainage
Certifier – Hydraulic (stormwater)

Land Development Certificates
www.LDC.com.au

DIAL 1100 BEFORE YOU DIG

CONSTRUCTION ISSUE

REV.	DATE	AMENDMENT	DESIGN	DRAWN	CHECKED	APPROVED
1	21.01.22	ISSUED FOR CONSTRUCTION	B.M.	J.J.	B.M.	B.M.

SCALES: A1 1:25 — 0 0.25 0.50 0.75 1.00 1.25m — A3 1:50

DESIGN FILE S:\300001\DESIGN\12D\STAGE 2 CC\DESIGN FILE.project

ALL DIMENSIONS ARE IN METRES. DO NOT SCALE

adw Johnson
Central Coast
5 Pioneer Avenue,
P.O. Box 3717,
Tuggerah N.S.W. 2259
Phone: (02) 4305 4300
Fax: (02) 4305 4399
email: coast@adwjohnson.com.au
www.adwjohnson.com.au
ABN 62 129 445 398

CLIENT: FRASERS PROPERTY

PROPERTY DESCRIPTION: LOT 100 D.P.1262209 & LOT 1 D.P.859537
EPPING ROAD & LYONPARK ROAD,
MACQUARIE PARK
SSDA 8903

SURVEYED: ADW Johnson

DATUM: GDA94 M.G.A. ZONE 56 A.H.D.

PROJECT: PROPOSED SUBDIVISION

PLAN TITLE: CUSTOM STORMWATER PIT
PIT No. 15\4

PROJECT No.	DISCIPLINE	NUMBER	REV.
300001(2) –	ENG –	491	1

Plotted By: Ben Myles Plot Date: 21/01/22 2:33:20PM Cad File: S:\300001\DRAWINGS\ENGINEERING\CIVIL\STAGE 2 CC ENG\300001(2)-ENG-491.DWG

100mm AT FULL SIZE

This plan includes coloured information. If you have a black and white copy you do not have all of the information. This note is coloured RED.

300001(2)-ENG-492

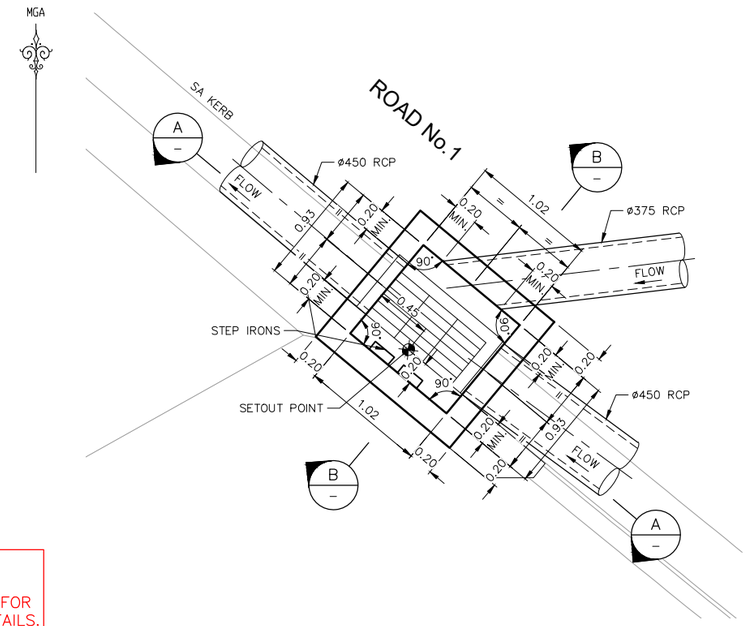

NOTE:

REFER SHEET 495 FOR REINFORCEMENT DETAILS.

NOTE:

LOCKABLE GRATES ARE TO BE INSTALLED TO PITS IN ACCORDANCE WITH RYDE CITY COUNCIL STANDARD DRAWINGS AND SPECIFICATIONS.

DETAIL PLAN – PIT 15\5

SCALE 1:25

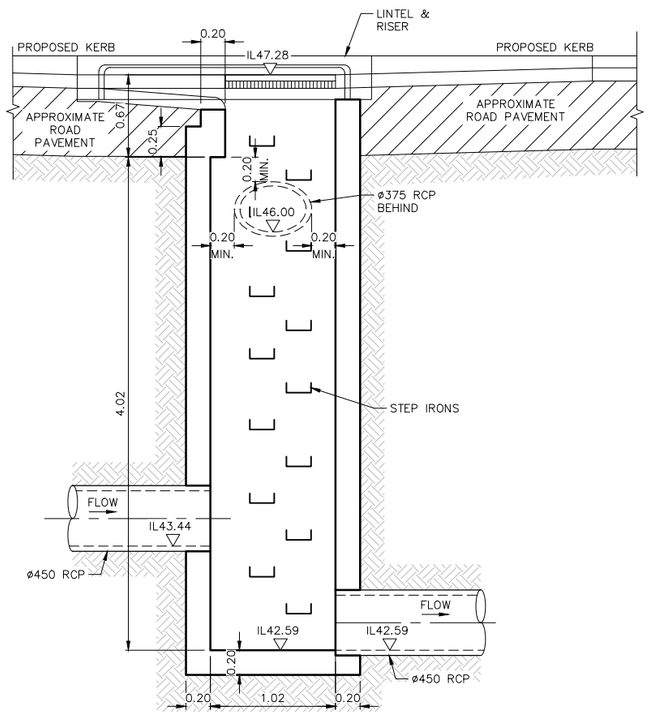

SECTION A

SCALE 1: 25

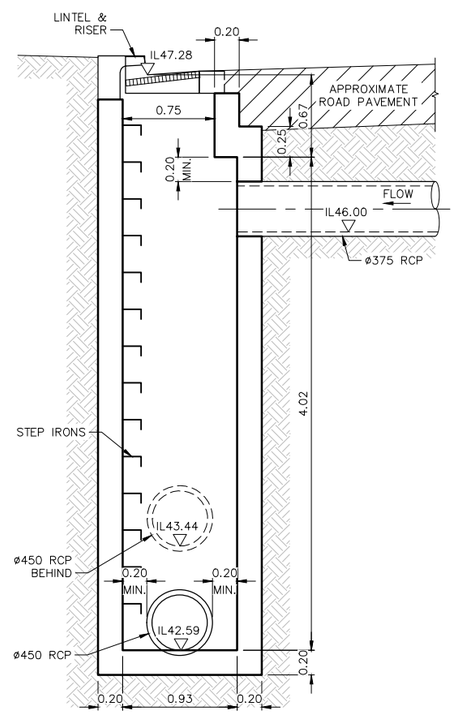

SECTION B

SCALE 1: 25

These plans are referred to in certificate no. **16746** approved by:

Eric Hausfeld
Registered Certifier

Registration No: BDC 2416

Categories: Certifier – Subdivision
Certifier – Strata
Certifier – Stormwater
Certifier – Road & Drainage
Certifier – Hydraulic (stormwater)

Land Development Certificates
www.LDC.com.au

DIAL1100 BEFORE YOU DIG

CONSTRUCTION ISSUE

REV.	DATE	AMENDMENT	DESIGN	DRAWN	CHECKED	APPROVED
1	21.01.22	ISSUED FOR CONSTRUCTION	B.M.	J.J.	B.M.	B.M.

SCALES: A1 1:25 — 0 0.25 0.50 0.75 1.00 1.25m — A3 1:50

DESIGN FILE S:\300001\DESIGN\12D\STAGE 2 CC\DESIGN FILE.project

ALL DIMENSIONS ARE IN METRES. DO NOT SCALE

adw Johnson
Central Coast
5 Pioneer Avenue,
P.O. Box 3717,
Tuggerah N.S.W. 2259
Phone: (02) 4305 4300
Fax: (02) 4305 4399
email: coast@adwjohnson.com.au
www.adwjohnson.com.au
ABN 62 129 445 398

CLIENT: FRASERS PROPERTY

PROPERTY DESCRIPTION: LOT 100 D.P.1262209 & LOT 1 D.P.859537
EPPING ROAD & LYONPARK ROAD,
MACQUARIE PARK
SSDA 8903

SURVEYED: ADW Johnson

DATUM: GDA94 M.G.A. ZONE 56 A.H.D.

PROJECT: PROPOSED SUBDIVISION

PLAN TITLE: CUSTOM STORMWATER PIT
PIT No. 15\5

PROJECT No.	DISCIPLINE	NUMBER	REV.
300001(2) –	ENG –	492	1

Plotted By: Ben Myles Plot Date: 21/01/22 2:33:26PM Cad File: S:\300001\DRAWINGS\ENGINEERING\CIVIL\STAGE 2 CC ENG\300001(2)-ENG-492.DWG

100mm AT FULL SIZE

This plan includes coloured information. If you have a black and white copy you do not have all of the information. This note is coloured RED.

300001(2)-ENG-493

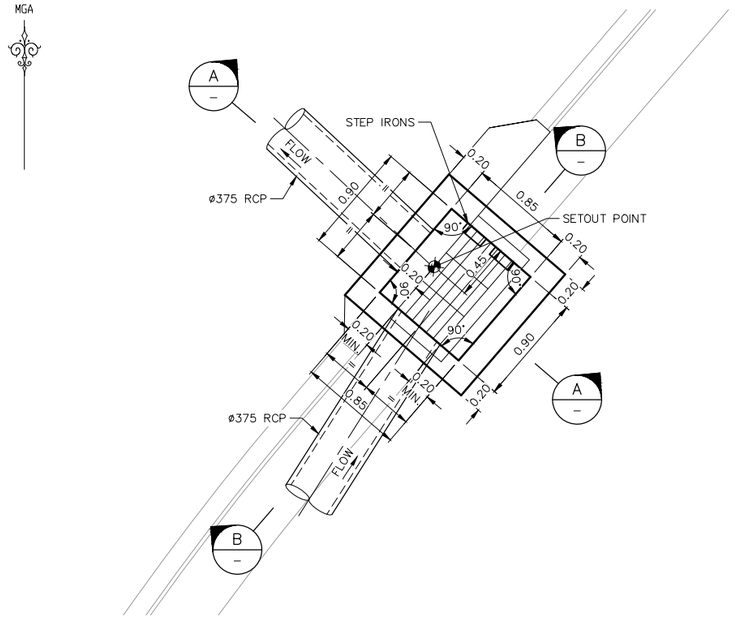

DETAIL PLAN – PIT 100\4

SCALE 1:25

NOTE:

REFER SHEET 495 FOR REINFORCEMENT DETAILS.

NOTE:

LOCKABLE GRATES ARE TO BE INSTALLED TO PITS IN ACCORDANCE WITH RYDE CITY COUNCIL STANDARD DRAWINGS AND SPECIFICATIONS.

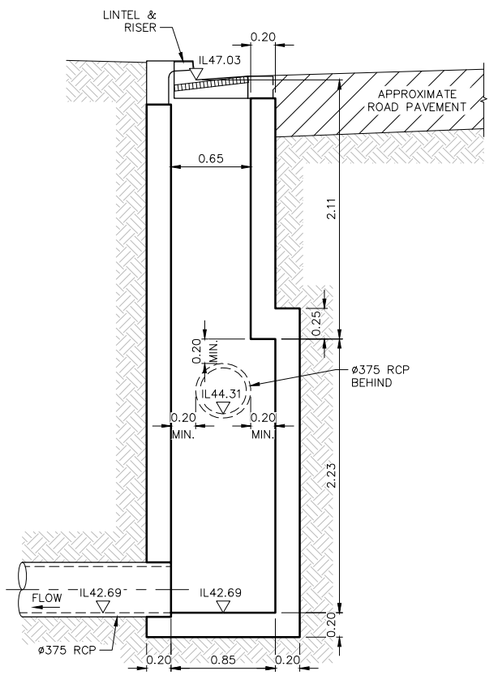

SECTION A

SCALE 1: 25

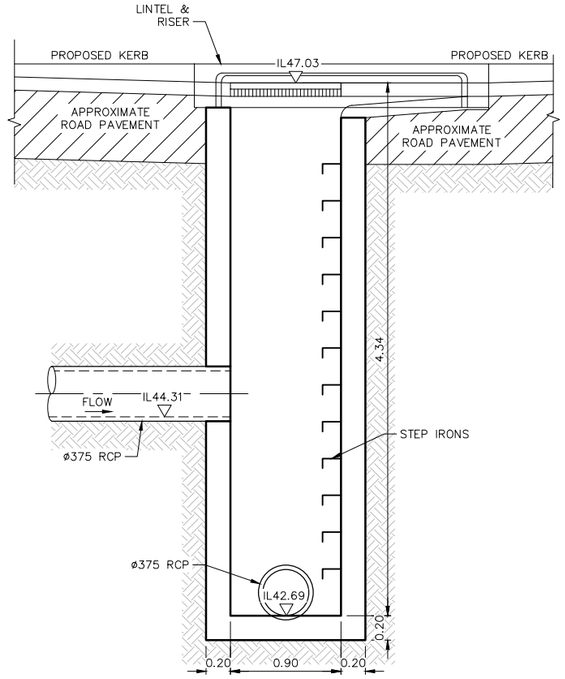

SECTION B

SCALE 1: 25

These plans are referred to in certificate no. **16746** approved by:

Eric Hausfeld
Registered Certifier

Registration No: BDC 2416

Categories: Certifier – Subdivision
Certifier – Strata
Certifier – Stormwater
Certifier – Road & Drainage
Certifier – Hydraulic (stormwater)

Land Development Certificates
www.LDC.com.au

DIAL 1100 BEFORE YOU DIG

CONSTRUCTION ISSUE

REV.	DATE	AMENDMENT	DESIGN	DRAWN	CHECKED	APPROVED
1	21.01.22	ISSUED FOR CONSTRUCTION	B.M.	J.J.	B.M.	B.M.

SCALES: A1 1:25 — 0 0.25 0.50 0.75 1.00 1.25m — A3 1:50

DESIGN FILE S:\300001\DESIGN\12D\STAGE 2 CC\DESIGN FILE.project

ALL DIMENSIONS ARE IN METRES. DO NOT SCALE

adw Johnson
Central Coast
5 Pioneer Avenue,
P.O. Box 3717,
Tuggerah N.S.W. 2259
Phone: (02) 4305 4300
Fax: (02) 4305 4399
email: coast@adwjohnson.com.au
www.adwjohnson.com.au
ABN 62 129 445 398

CLIENT: FRASERS PROPERTY

PROPERTY DESCRIPTION: LOT 100 D.P.1262209 & LOT 1 D.P.859537
EPPING ROAD & LYONPARK ROAD,
MACQUARIE PARK
SSDA 8903

SURVEYED: ADW Johnson

DATUM: GDA94 M.G.A. ZONE 56 A.H.D.

PROJECT: PROPOSED SUBDIVISION

PLAN TITLE: CUSTOM STORMWATER PIT
PIT No. 100\4

PROJECT No.	DISCIPLINE	NUMBER	REV.
300001(2) –	ENG –	493	1

Plotted By: Ben Myles Plot Date: 21/01/22 2:33:31PM Cad File: S:\300001\DRAWINGS\ENGINEERING\CIVIL\STAGE 2 CC ENG\300001(2)-ENG-493.DWG

100mm AT FULL SIZE

This plan includes coloured information. If you have a black and white copy you do not have all of the information. This note is coloured RED.

300001(2)-ENG-494

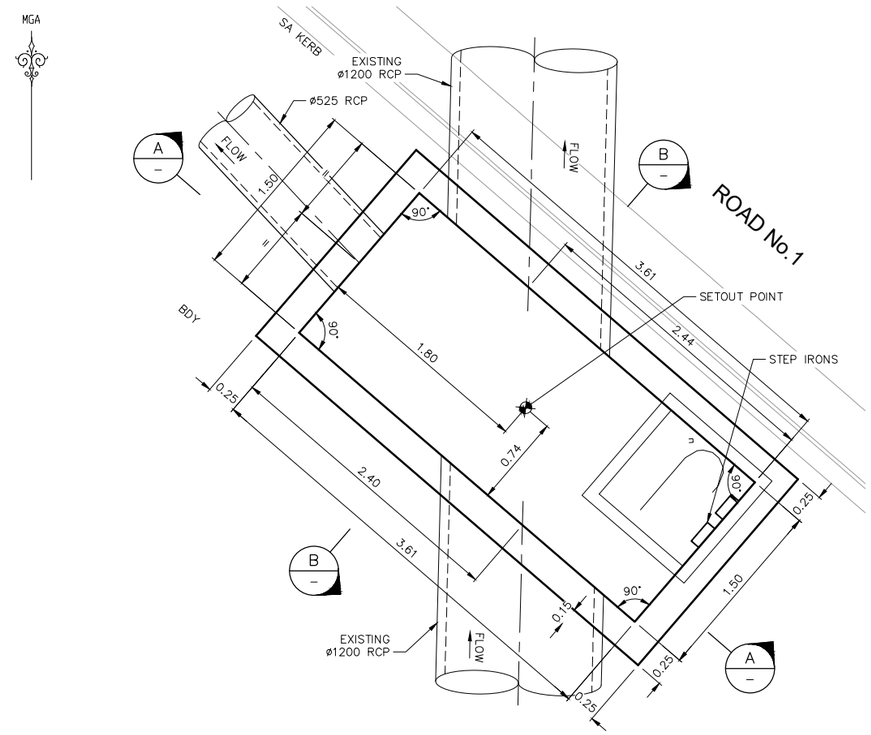

DETAIL PLAN – PIT 101\1

SCALE 1:25

NOTE:

REFER SHEET 496 FOR REINFORCEMENT DETAILS.

CONTRACTOR TO CONFIRM SETOUT OF PIT 101\1 AGAINST SA KERB FOR CONSTRUCTION CLEARANCES

NOTE:

LOCKABLE GRATES ARE TO BE INSTALLED TO PITS IN ACCORDANCE WITH RYDE CITY COUNCIL STANDARD DRAWINGS AND SPECIFICATIONS.

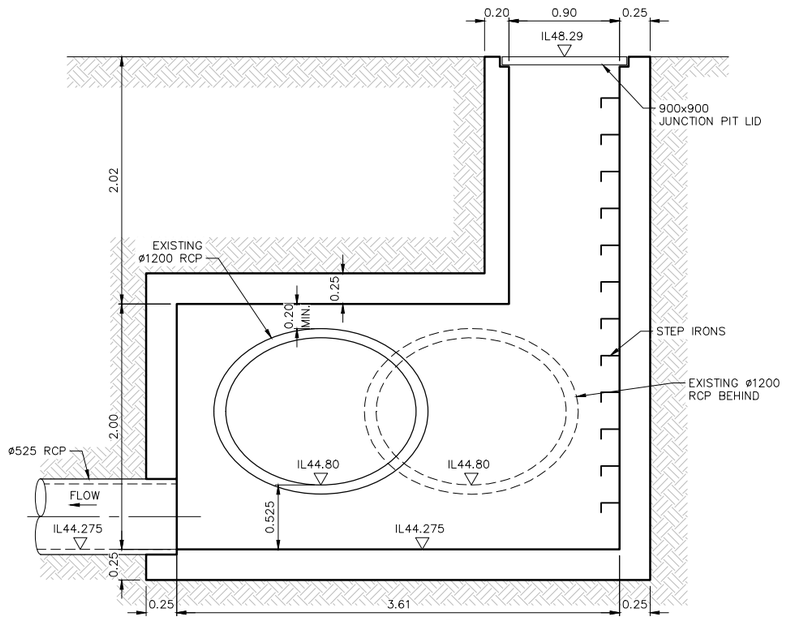

SECTION A

SCALE 1: 25

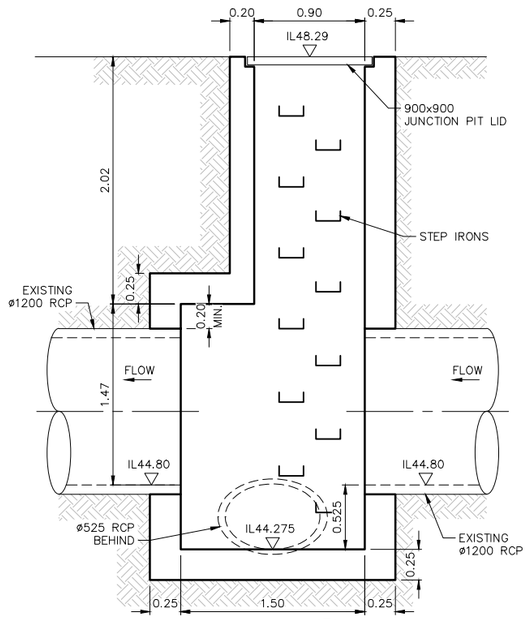

SECTION B

SCALE 1: 25

NOTE:

CONTRACTOR TO CONFIRM EXISTING 1200ø PIPE LEVELS PRIOR TO COMMENCING CONSTRUCTION.

These plans are referred to in certificate no. **16746** approved by:

Eric Hausfeld
Registered Certifier

Registration No: BDC 2416

Categories:
- Certifier – Subdivision
- Certifier – Strata
- Certifier – Stormwater
- Certifier – Road & Drainage
- Certifier – Hydraulic (stormwater)

Land Development Certificates
www.LDC.com.au

DIAL 1100 BEFORE YOU DIG

CONSTRUCTION ISSUE

REV.	DATE	AMENDMENT	DESIGN	DRAWN	CHECKED	APPROVED
1	21.01.22	ISSUED FOR CONSTRUCTION	B.M.	J.J.	B.M.	B.M.

SCALES: A1 1:25 — 0 0.25 0.50 0.75 1.00 1.25m — A3 1:50

DESIGN FILE S:\300001\DESIGN\12D\STAGE 2 CC\DESIGN FILE.project

ALL DIMENSIONS ARE IN METRES. DO NOT SCALE

adw Johnson
Central Coast
5 Pioneer Avenue,
P.O. Box 3717,
Tuggerah N.S.W. 2259
Phone: (02) 4305 4300
Fax: (02) 4305 4399
email: coast@adwjohnson.com.au
www.adwjohnson.com.au
ABN 62 129 445 398

CLIENT: FRASERS PROPERTY

PROPERTY DESCRIPTION: LOT 100 D.P.1262209 & LOT 1 D.P.859537
EPPING ROAD & LYONPARK ROAD,
MACQUARIE PARK
SSDA 8903

SURVEYED: ADW Johnson

DATUM: GDA94 M.G.A. ZONE 56 A.H.D.

PROJECT: PROPOSED SUBDIVISION

PLAN TITLE: CUSTOM STORMWATER PIT
PIT No. 101\1

PROJECT No.	DISCIPLINE	NUMBER	REV.
300001(2) –	ENG –	494	1

Plotted By: Ben Myles Plot Date: 21/01/22 2:33:37PM Cad File: S:\300001\DRAWINGS\ENGINEERING\CIVIL\STAGE 2 CC ENG\300001(2)-ENG-494.DWG

100mm AT FULL SIZE

This plan includes coloured information. If you have a black and white copy you do not have all of the information. This note is coloured RED.

300001(2)-ENG-495

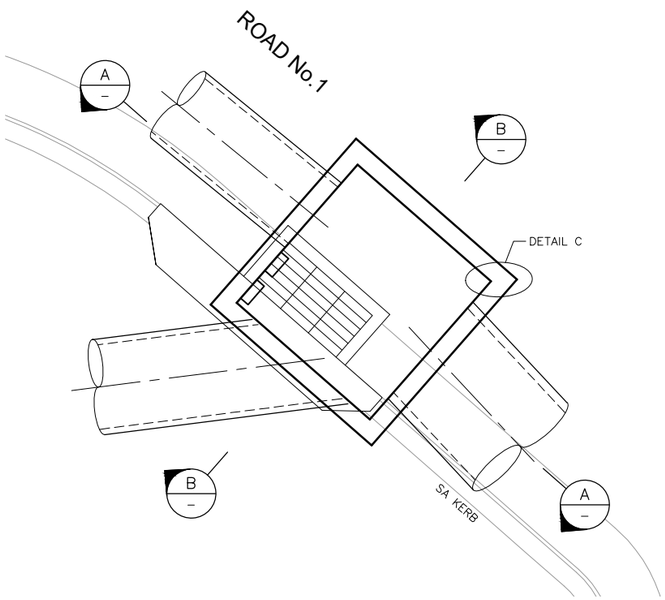

DETAIL PLAN – TYPICAL PIT

SCALE 1:25

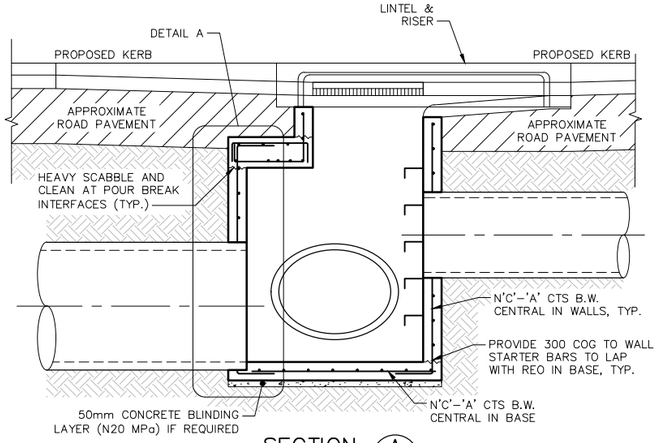

SECTION A

SCALE 1: 25

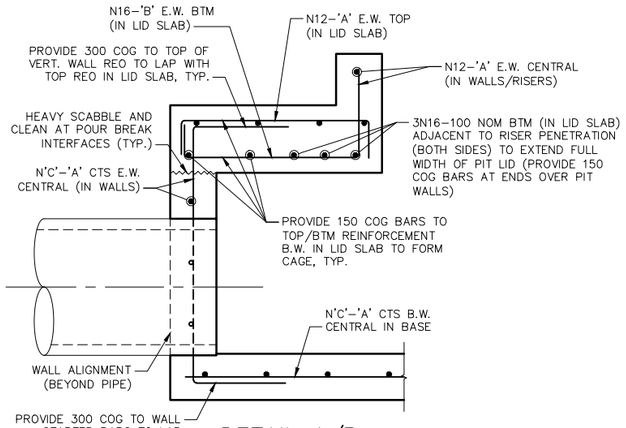

DETAIL A/B

SCALE 1:10

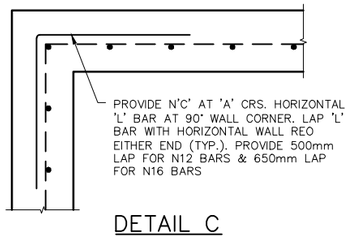

DETAIL C

90° CORNER REINFORCEMENT DETAILS
(SINGLE LAYER REINFORCEMENT)
SCALE 1:10

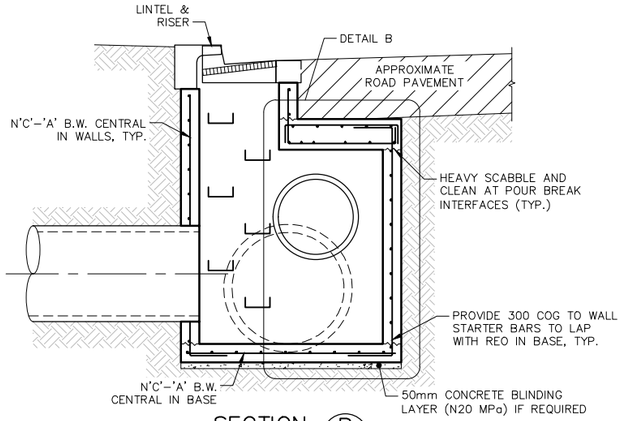

SECTION B

SCALE 1: 25

TYPICAL CUSTOM PIT DETAILS:

- CONCRETE GRADE – 32MPa (80mm SLUMP, 20mm AGGREGATE GP CEMENT)
- CONCRETE COVER (CAST AGAINST GROUND) – 50mm
- CONCRETE COVER (EXPOSED TO ATMOSPHERE) – 50mm

NOTE:

REFER TO SHEETS 481 TO 494 & 499 FOR PIT DIMENSIONS & WALL/LID SLAB/BASE THICKNESSES.

NOTE:

REFER TO SHEET 497 FOR TYPICAL TRIMMER BAR AROUND PIPE PENETRATIONS.

REINFORCEMENT TABLE

PIT	'A'	'B'	'C'
1\10	200	200	16
1\14	200	200	12
1\15	200	200	12
1\16	200	200	12
1\17	200	200	16
3\9	200	200	12
3\10	200	200	12
3\11	200	200	12
3\12	200	200	12
3\13	200	200	12
15\3	200	200	16
15\4	200	200	16
15\5	200	200	16
100\4	200	200	16

These plans are referred to in certificate no. **16746** approved by:
Eric Hausfeld
Registered Certifier
Registration No: BDC 2416
Categories: Certifier – Subdivision; Certifier – Strata; Certifier – Stormwater; Certifier – Road & Drainage; Certifier – Hydraulic (stormwater)
Land Development Certificates
www.LDC.com.au

DIAL 1100 BEFORE YOU DIG

CONSTRUCTION ISSUE

REV.	DATE	AMENDMENT	DESIGN	DRAWN	CHECKED	APPROVED
1	21.01.22	ISSUED FOR CONSTRUCTION	B.M.	J.J.	B.M.	B.M.

SCALES: A1 1:25 (0, 0.25, 0.50, 0.75, 1.00, 1.25m) A3 1:50; A1 1:10 (0, 0.25, 0.5m) A3 1:20

ALL DIMENSIONS ARE IN METRES. DO NOT SCALE

adw Johnson
Central Coast
5 Pioneer Avenue,
P.O. Box 3717,
Tuggerah N.S.W. 2259
Phone: (02) 4305 4300
Fax: (02) 4305 4399
email: coast@adwjohnson.com.au
www.adwjohnson.com.au
ABN 62 129 445 398

CLIENT: FRASERS PROPERTY

PROPERTY DESCRIPTION: LOT 100 D.P.1262209 & LOT 1 D.P.859537
EPPING ROAD & LYONPARK ROAD,
MACQUARIE PARK
SSDA 8903

SURVEYED: ADW Johnson
DATUM: GDA94 M.G.A. ZONE 56 A.H.D.

PROJECT: PROPOSED SUBDIVISION

PLAN TITLE: TYPICAL CUSTOM STORMWATER PIT DETAILS SHEET 1

PROJECT No. 300001(2) – DISCIPLINE ENG – NUMBER 495 REV. 1

DESIGN FILE S:\300001\DESIGN\12D\STAGE 2 CC\DESIGN FILE.project

Plotted By: Ben Myles Plot Date: 21/01/22 2:33:43PM Cad File: S:\300001\DRAWINGS\ENGINEERING\CIVIL\STAGE 2 CC ENG\300001(2)-ENG-495.DWG

100mm AT FULL SIZE

This plan includes coloured information. If you have a black and white copy you do not have all of the information. This note is coloured RED.

300001(2)-ENG-496

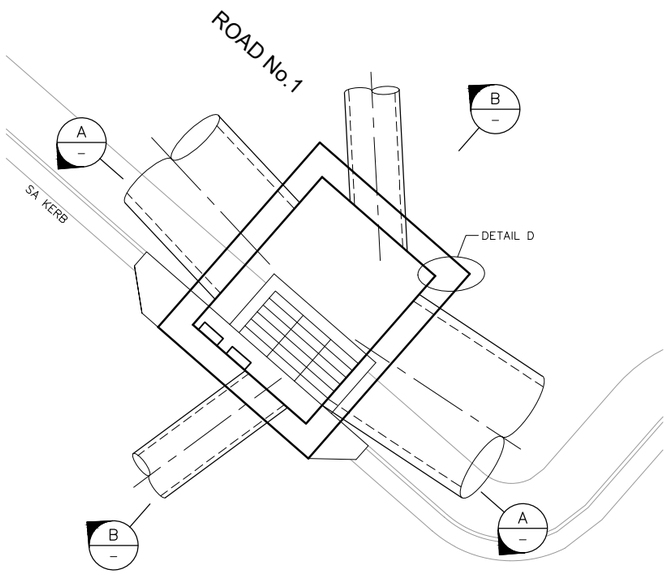

DETAIL PLAN – TYPICAL PIT

SCALE 1:25

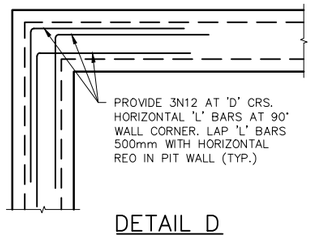

DETAIL D

90° CORNER REINFORCEMENT DETAILS
(DOUBLE LAYER REINFORCEMENT)
SCALE 1:10

REINFORCEMENT TABLE

PIT	'C'	'D'	'E'
101\1	16	200	200

TYPICAL CUSTOM PIT DETAILS:

- CONCRETE GRADE – 32MPa (80mm SLUMP, 20mm AGGREGATE GP CEMENT)
- CONCRETE COVER (CAST AGAINST GROUND) – 50mm
- CONCRETE COVER (EXPOSED TO ATMOSPHERE) – 50mm

NOTE:

REFER TO SHEETS 481 TO 494 & 499 FOR PIT DIMENSIONS & WALL/LID SLAB/BASE THICKNESSES.

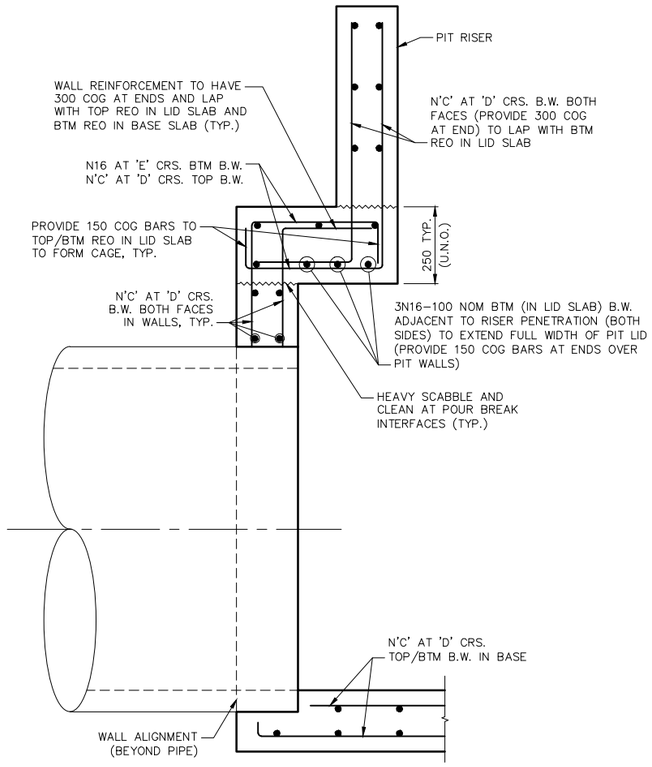

DETAIL A/B

SCALE 1:10

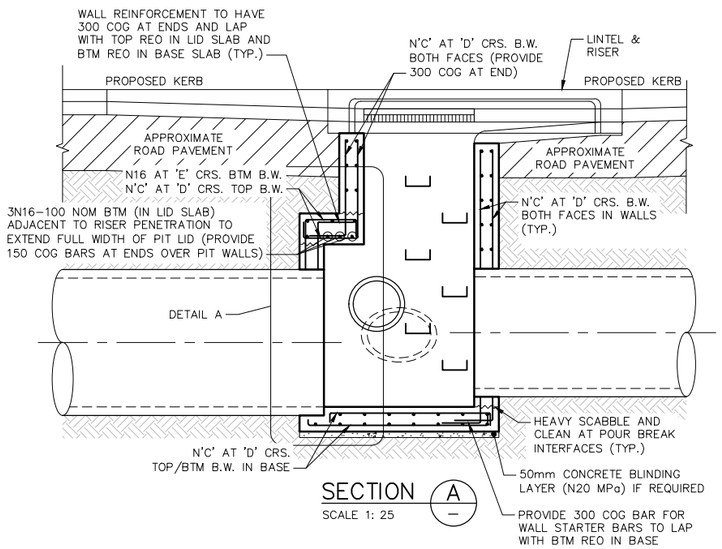

SECTION A

SCALE 1: 25

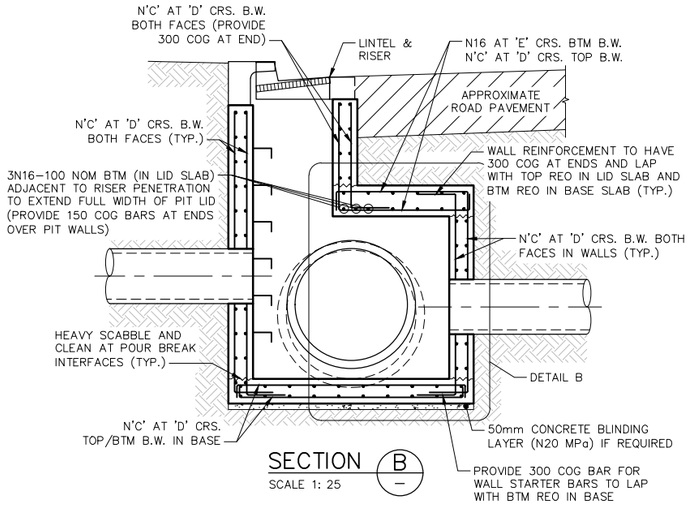

SECTION B

SCALE 1: 25

NOTE:

REFER TO SHEET 497 FOR TYPICAL TRIMMER BAR AROUND PIPE PENETRATIONS.

These plans are referred to in certificate no. **16746** approved by:
Eric Hausfeld
Registered Certifier
Registration No: BDC 2416
Categories: Certifier – Subdivision; Certifier – Strata; Certifier – Stormwater; Certifier – Road & Drainage; Certifier – Hydraulic (stormwater)
Land Development Certificates
www.LDC.com.au

DIAL 1100 BEFORE YOU DIG

CONSTRUCTION ISSUE

REV.	DATE	AMENDMENT	DESIGN	DRAWN	CHECKED	APPROVED
1	21.01.22	ISSUED FOR CONSTRUCTION	B.M.	J.J.	B.M.	B.M.

DESIGN FILE S:\300001\DESIGN\12D\STAGE 2 CC\DESIGN FILE.project

SCALES: A1 1:25 (0, 0.25, 0.50, 0.75, 1.00, 1.25m) A3 1:50; A1 1:10 (0, 0.25, 0.5m) A3 1:20

ALL DIMENSIONS ARE IN METRES. DO NOT SCALE

adw Johnson
Central Coast
5 Pioneer Avenue,
P.O. Box 3717,
Tuggerah N.S.W. 2259
Phone: (02) 4305 4300
Fax: (02) 4305 4399
email: coast@adwjohnson.com.au
www.adwjohnson.com.au
ABN 62 129 445 398

CLIENT: FRASERS PROPERTY

PROPERTY DESCRIPTION: LOT 100 D.P.1262209 & LOT 1 D.P.859537, EPPING ROAD & LYONPARK ROAD, MACQUARIE PARK, SSDA 8903

SURVEYED: ADW Johnson
DATUM: GDA94 M.G.A. ZONE 56 A.H.D.

PROJECT: PROPOSED SUBDIVISION

PLAN TITLE: TYPICAL CUSTOM STORMWATER PIT DETAILS SHEET 2

PROJECT No.	DISCIPLINE	NUMBER	REV.
300001(2)	ENG	496	1

Plotted By: Ben Myles Plot Date: 21/01/22 2:33:49PM Cad File: S:\300001\DRAWINGS\ENGINEERING\CIVIL\STAGE 2 CC ENG\300001(2)-ENG-496.DWG

100mm AT FULL SIZE

This plan includes coloured information. If you have a black and white copy you do not have all of the information. This note is coloured RED.

300001(2)-ENG-497

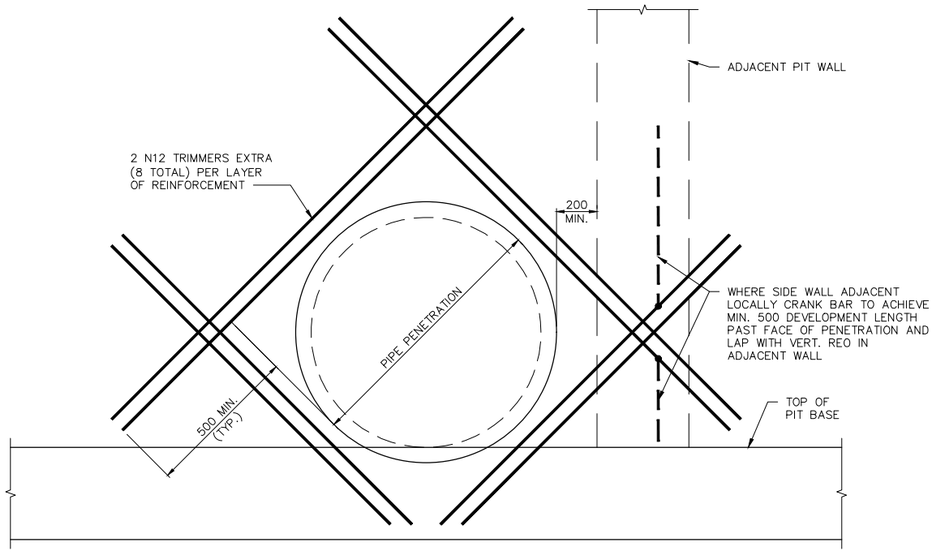

TYPICAL TRIMMER BAR DETAIL AROUND SINGLE PIPE PENETRATION

SCALE 1:10

These plans are referred to in certificate no. **16746** approved by:

Eric Hausfeld
Registered Certifier

Registration No: BDC 2416

Categories:
Certifier – Subdivision
Certifier – Strata
Certifier – Stormwater
Certifier – Road & Drainage
Certifier – Hydraulic (stormwater)

Land Development Certificates
www.LDC.com.au

DIAL1100 BEFORE YOU DIG

CONSTRUCTION ISSUE

REV.	DATE	AMENDMENT	DESIGN	DRAWN	CHECKED	APPROVED
1	21.01.22	ISSUED FOR CONSTRUCTION	B.M.	J.J.	B.M.	B.M.

SCALES: A1 1:10 — 0 0.25 0.5m — A3 1:20

DESIGN FILE S:\300001\DESIGN\12D\STAGE 2 CC\DESIGN FILE.project

ALL DIMENSIONS ARE IN METRES. DO NOT SCALE

adw Johnson
Central Coast
5 Pioneer Avenue,
P.O. Box 3717,
Tuggerah N.S.W. 2259
Phone: (02) 4305 4300
Fax: (02) 4305 4399
email: coast@adwjohnson.com.au
www.adwjohnson.com.au
ABN 62 129 445 398

CLIENT: FRASERS PROPERTY

PROPERTY DESCRIPTION
LOT 100 D.P.1262209 & LOT 1 D.P.859537
EPPING ROAD & LYONPARK ROAD,
MACQUARIE PARK
SSDA 8903

SURVEYED: ADW Johnson
DATUM: GDA94 M.G.A. ZONE 56 A.H.D.

PROJECT: PROPOSED SUBDIVISION

PLAN TITLE: TYPICAL CUSTOM STORMWATER PIT DETAILS SHEET 3

PROJECT No.	DISCIPLINE	NUMBER	REV.
300001(2)	ENG	497	1

Plotted By: Ben Myles Plot Date: 21/01/22 2:33:54PM Cad File: S:\300001\DRAWINGS\ENGINEERING\CIVIL\STAGE 2 CC ENG\300001(2)-ENG-497.DWG

100mm AT FULL SIZE

This plan includes coloured information. If you have a black and white copy you do not have all of the information. This note is coloured RED.

300001(2)-ENG-498

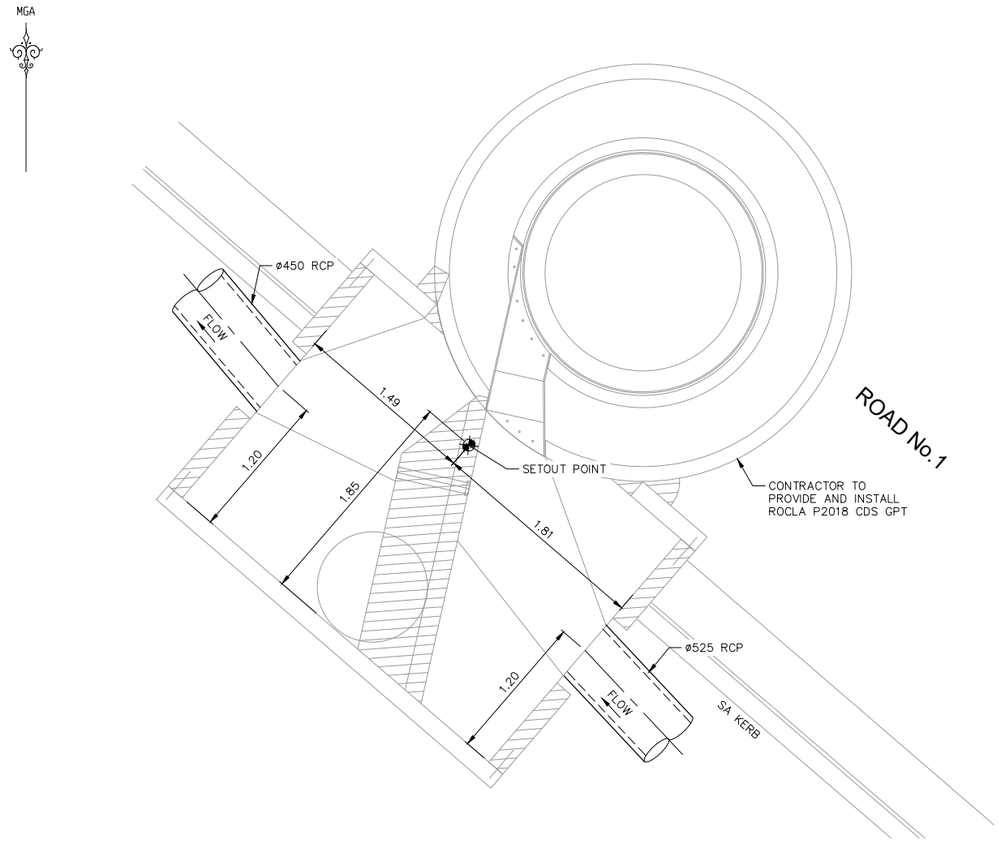

SETOUT PLAN – PIT 101\2

SCALE 1:25

NOTE:

REFER SHEET 411 FOR SETOUT DETAILS

These plans are referred to in certificate no. **16746** approved by:

Eric Hausfeld
Registered Certifier

Registration No: BDC 2416
Categories: Certifier – Subdivision
Certifier – Strata
Certifier – Stormwater
Certifier – Road & Drainage
Certifier – Hydraulic (stormwater)

Land Development Certificates
www.LDC.com.au

DIAL 1100 BEFORE YOU DIG

CONSTRUCTION ISSUE

REV.	DATE	AMENDMENT	DESIGN	DRAWN	CHECKED	APPROVED
1	21.01.22	ISSUED FOR CONSTRUCTION	B.M.	J.J.	B.M.	B.M.

SCALES: A1 1:25 — 0 0.25 0.50 0.75 1.00 1.25m — A3 1:50

DESIGN FILE S:\300001\DESIGN\12D\STAGE 2 CC\DESIGN FILE.project

ALL DIMENSIONS ARE IN METRES. DO NOT SCALE

adw Johnson
Central Coast
5 Pioneer Avenue,
P.O. Box 3717,
Tuggerah N.S.W. 2259
Phone: (02) 4305 4300
Fax: (02) 4305 4399
email: coast@adwjohnson.com.au
www.adwjohnson.com.au
ABN 62 129 445 398

CLIENT: FRASERS PROPERTY

PROPERTY DESCRIPTION: LOT 100 D.P.1262209 & LOT 1 D.P.859537
EPPING ROAD & LYONPARK ROAD,
MACQUARIE PARK
SSDA 8903

SURVEYED: ADW Johnson

DATUM: GDA94 M.G.A. ZONE 56 A.H.D.

PROJECT: PROPOSED SUBDIVISION

PLAN TITLE: STORMWATER PIT 101\2
SETOUT PLAN

PROJECT No.	DISCIPLINE	NUMBER	REV.
300001(2) –	ENG –	498	1

Plotted By: Ben Myles Plot Date: 21/01/22 2:33:59PM Cad File: S:\300001\DRAWINGS\ENGINEERING\CIVIL\STAGE 2 CC ENG\300001(2)-ENG-498.DWG

100mm AT FULL SIZE

This plan includes coloured information. If you have a black and white copy you do not have all of the information. This note is coloured RED.

300001(2)-ENG-499

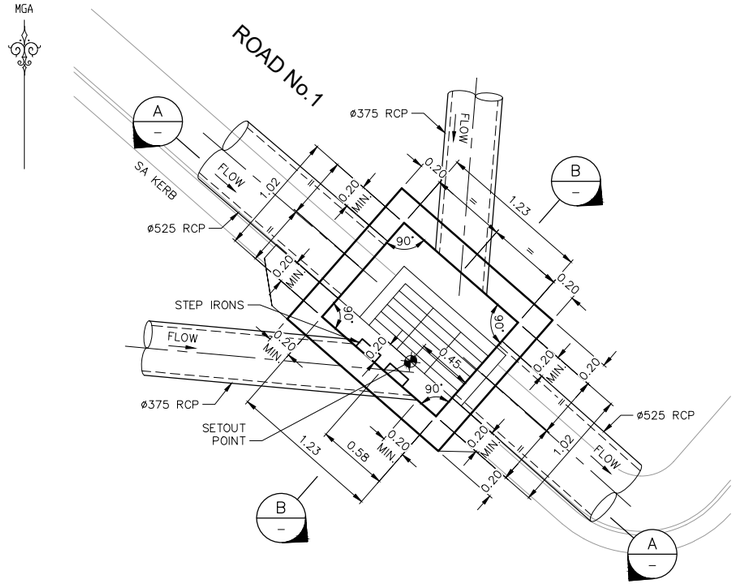

DETAIL PLAN – PIT 1\10

SCALE 1:25

NOTE:

REFER SHEET 495 FOR REINFORCEMENT DETAILS.

NOTE:

LOCKABLE GRATES ARE TO BE INSTALLED TO PITS IN ACCORDANCE WITH RYDE CITY COUNCIL STANDARD DRAWINGS AND SPECIFICATIONS.

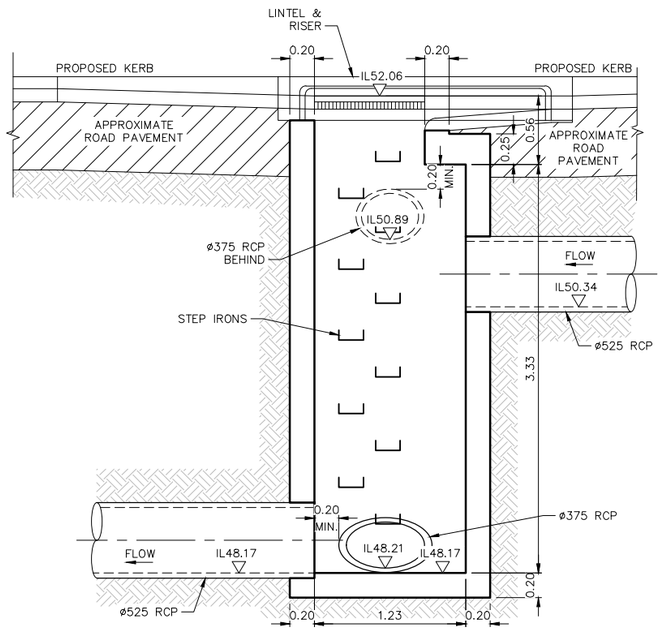

SECTION A

SCALE 1: 25

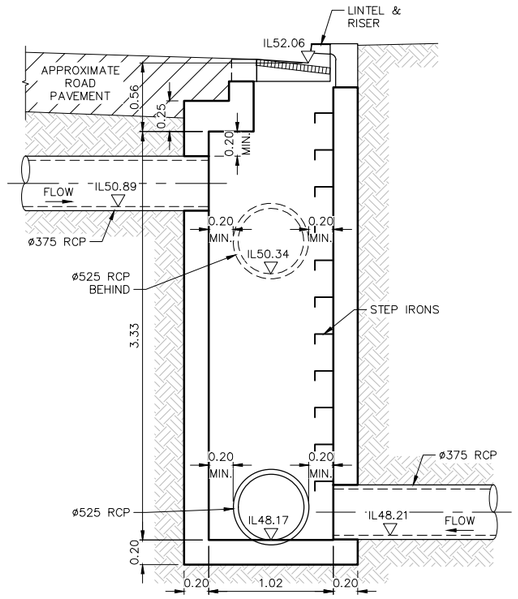

SECTION B

SCALE 1: 25

These plans are referred to in certificate no. **16746** approved by:

Eric Hausfeld
Registered Certifier

Registration No: BDC 2416
Categories: Certifier – Subdivision
Certifier – Strata
Certifier – Stormwater
Certifier – Road & Drainage
Certifier – Hydraulic (stormwater)

Land Development Certificates
www.LDC.com.au

DIAL 1100 BEFORE YOU DIG

CONSTRUCTION ISSUE

REV.	DATE	AMENDMENT	DESIGN	DRAWN	CHECKED	APPROVED
1	21.01.22	ISSUED FOR CONSTRUCTION	B.M.	J.J.	B.M.	B.M.

SCALES: A1 1:25 — 0 0.25 0.50 0.75 1.00 1.25m — A3 1:50

DESIGN FILE S:\300001\DESIGN\12D\STAGE 2 CC\DESIGN FILE.project

ALL DIMENSIONS ARE IN METRES. DO NOT SCALE

adw Johnson
Central Coast
5 Pioneer Avenue,
P.O. Box 3717,
Tuggerah N.S.W. 2259
Phone: (02) 4305 4300
Fax: (02) 4305 4399
email: coast@adwjohnson.com.au
www.adwjohnson.com.au
ABN 62 129 445 398

CLIENT: FRASERS PROPERTY

PROPERTY DESCRIPTION: LOT 100 D.P.1262209 & LOT 1 D.P.859537
EPPING ROAD & LYONPARK ROAD,
MACQUARIE PARK
SSDA 8903

SURVEYED: ADW Johnson

DATUM: GDA94 M.G.A. ZONE 56 A.H.D.

PROJECT: PROPOSED SUBDIVISION

PLAN TITLE: CUSTOM STORMWATER PIT
PIT No. 1\10

PROJECT No.	DISCIPLINE	NUMBER	REV.
300001(2)	ENG	499	1

Plotted By: Ben Myles Plot Date: 21/01/22 2:34:04PM Cad File: S:\300001\DRAWINGS\ENGINEERING\CIVIL\STAGE 2 CC ENG\300001(2)-ENG-499.DWG

100mm AT FULL SIZE

This plan includes coloured information. If you have a black and white copy you do not have all of the information. This note is coloured RED.

300001(2)-ENG-501

LEGEND (+ FILL – CUT) Lower		Upper	Colour
−4.00	to	−3.50 m	
−3.50	to	−3.00 m	
−3.00	to	−2.50 m	
−2.50	to	−2.00 m	
−2.00	to	−1.50 m	
−1.50	to	−1.00 m	
−1.00	to	−0.50 m	
−0.50	to	−0.00 m	
0.00001	to	0.50 m	
0.50	to	1.00 m	
1.00	to	1.50 m	
1.50	to	2.00 m	
2.00	to	2.50 m	
2.50	to	3.00 m	

VOLUMES:

CUT =	- 6,600m³
FILL =	3,350m³
EXCESS =	3,250m³

These plans are referred to in certificate no. **16746** approved by:

Eric Hausfeld
Registered Certifier

Registration No: BDC 2416
Categories: Certifier – Subdivision
Certifier – Strata
Certifier – Stormwater
Certifier – Road & Drainage
Certifier – Hydraulic (stormwater)

Land Development Certificates
www.LDC.com.au

MGA

LEGEND

- SITE BOUNDARY
- LIMIT OF WORKS BOUNDARY
- PROPOSED LOT BOUNDARY
- EXISTING LOT BOUNDARY
- MAJOR CONTOURS
- MINOR CONTOURS
- PROPOSED KERB
- EXISTING KERB
- EXTENTS OF BATTER

CONTOUR INTERVAL = 0.5m

GENERAL NOTES: –

1. VOLUMES ARE BASED UPON LEVEL DIFFERENCE BETWEEN EXISTING SURFACE (NO STRIPPING OF TOPSOIL IS ASSUMED) AND PROPOSED SUBGRADE LEVELS. SUBGRADE LEVEL CONSISTS OF PAVEMENT THICKNESSES OUTLINED ON SHEET 152 AND 100mm ALLOWANCE FOR TOPSOIL REPLACEMENT IN LANDSCAPED AREA.
2. NO ALLOWANCE HAS BEEN MADE FOR LANDSCAPE OR TO TRENCHSPOIL VOLUMES.

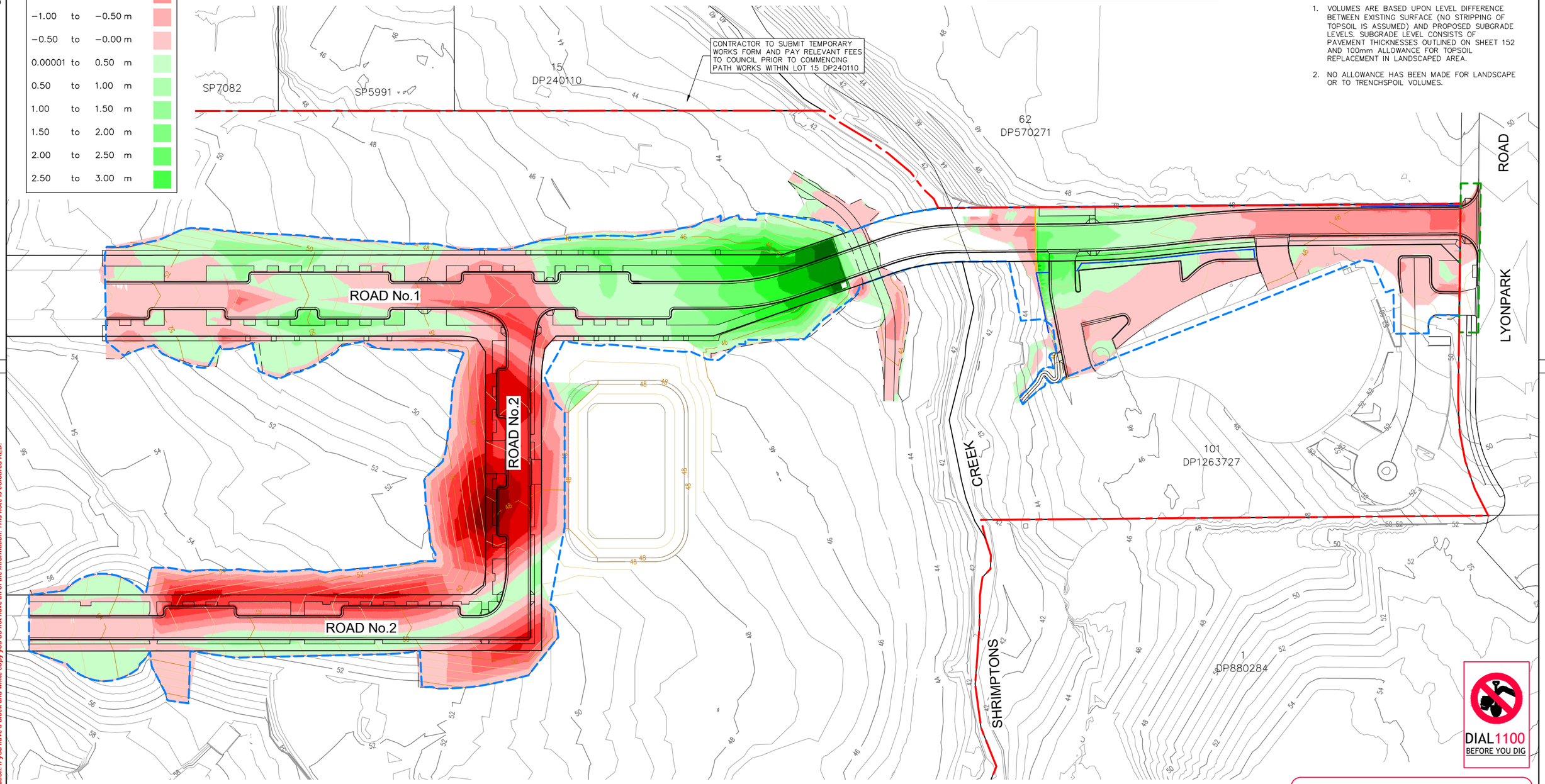

DIAL 1100 BEFORE YOU DIG

SITE REGRADE PLAN

SCALE 1:500

CONSTRUCTION ISSUE

REV.	DATE	AMENDMENT	DESIGN	DRAWN	CHECKED	APPROVED
1	21.01.22	ISSUED FOR CONSTRUCTION	B.M.	J.J.	B.M.	B.M.

SCALES: A1 1:500 — 0 12.5 25.0m — A3 1:1000

DESIGN FILE S:\300001\DESIGN\12D\STAGE 2 CC\DESIGN FILE.project

ALL DIMENSIONS ARE IN METRES. DO NOT SCALE

adw Johnson
Central Coast
5 Pioneer Avenue,
P.O. Box 3717,
Tuggerah N.S.W. 2259
Phone: (02) 4305 4300
Fax: (02) 4305 4399
email: coast@adwjohnson.com.au
www.adwjohnson.com.au
ABN 62 129 445 398

CLIENT: FRASERS PROPERTY

PROPERTY DESCRIPTION: LOT 100 D.P.1262209 & LOT 1 D.P.859537
EPPING ROAD & LYONPARK ROAD,
MACQUARIE PARK
SSDA 8903

SURVEYED: ADW Johnson
DATUM: GDA94 M.G.A. ZONE 56 A.H.D.

PROJECT: PROPOSED SUBDIVISION

PLAN TITLE: SITE REGRADE PLAN

PROJECT No.	DISCIPLINE	NUMBER	REV.
300001(2) –	ENG –	501	1

Plotted By: Ben Myles Plot Date: 21/01/22 2:34:17PM Cad File: S:\300001\DRAWINGS\ENGINEERING\CIVIL\STAGE 2 CC ENG\300001(2)-ENG-501.DWG

100mm AT FULL SIZE

This plan includes coloured information. If you have a black and white copy you do not have all of the information. This note is coloured RED.

300001(2)-ENG-551

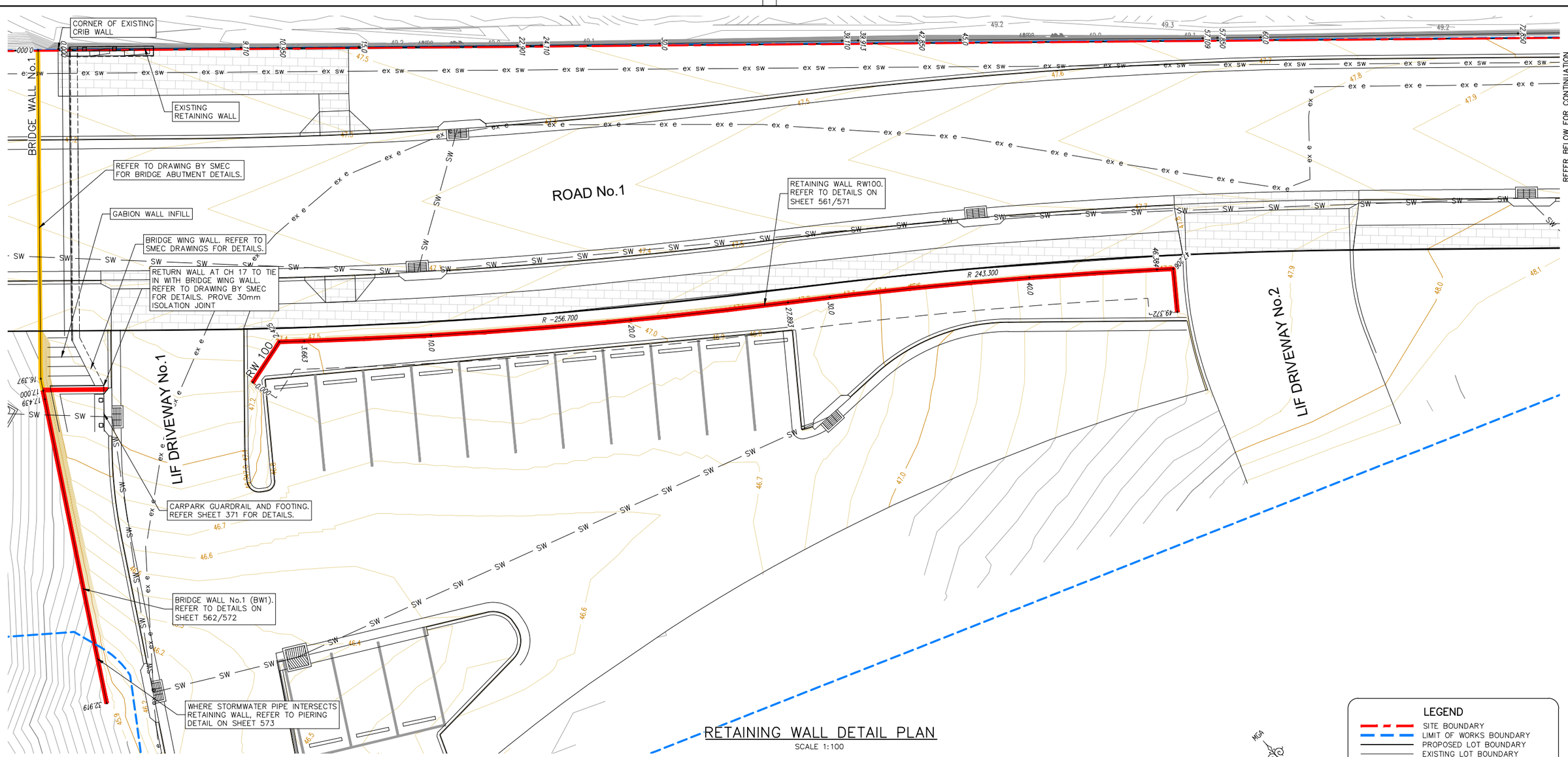

RETAINING WALL DETAIL PLAN

SCALE 1:100

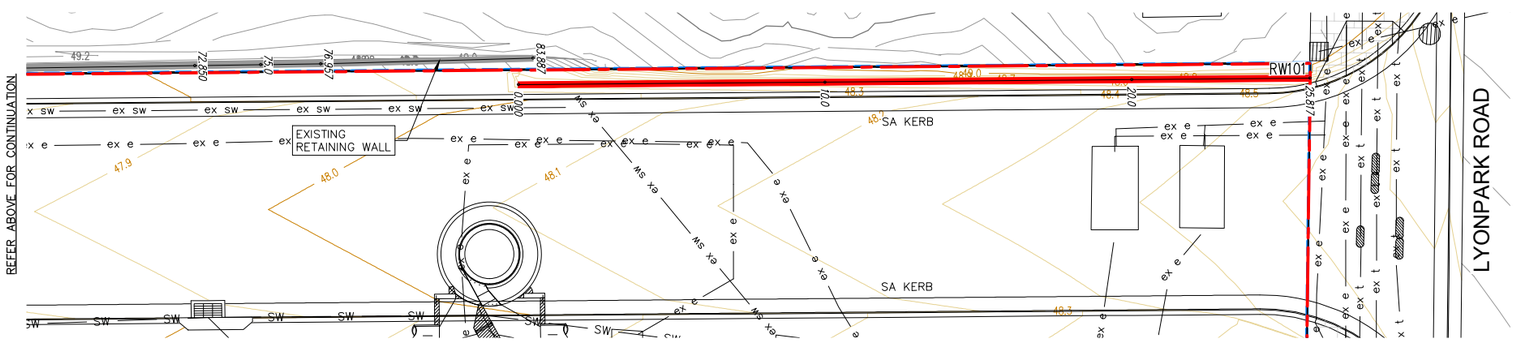

RETAINING WALL DETAIL PLAN

SCALE 1:100

MGA

LEGEND

- SITE BOUNDARY
- LIMIT OF WORKS BOUNDARY
- PROPOSED LOT BOUNDARY
- EXISTING LOT BOUNDARY
- MAJOR CONTOURS
- MINOR CONTOURS
- PROPOSED KERB
- EXISTING KERB
- EXTENTS OF BATTER
- PROPOSED RETAINING WALL
- BRIDGE WALL
- SW — PROPOSED STORMWATER

CONTOUR INTERVAL = 0.1m

GENERAL NOTES:–

1. FOR TYPICAL ROAD CROSS SECTIONS AND KERB PROFILES REFER SHEET 201, PAVEMENT DETAILS REFER TO SHEET 151
2. SETOUT INFORMATION IS TO BE VERIFIED BY THE CONTRACTOR AGAINST THE PLAN VIEW, LONGITUDINAL SECTIONS AND ELECTRONIC 12D DATA BEFORE BEING USED. IF THERE IS A DISCREPANCY THE SUPERINTENDENT IS TO BE NOTIFIED AND DIRECTION TO BE PROVIDED IN WRITING BEFORE PROCEEDING.

DIAL1100 BEFORE YOU DIG

LDC

These plans are referred to in certificate no. **16746** approved by:

Eric Hausfeld
Registered Certifier

Registration No: BDC 2416
Categories: Certifier – Subdivision
Certifier – Strata
Certifier – Stormwater
Certifier – Road & Drainage
Certifier – Hydraulic (stormwater)

Land Development Certificates
www.LDC.com.au

CONSTRUCTION ISSUE

REV.	DATE	AMENDMENT	DESIGN	DRAWN	CHECKED	APPROVED
1	21.01.22	ISSUED FOR CONSTRUCTION	B.M.	J.J.	B.M.	B.M.

SCALES: A1 1:100 — 0 2.5 5.0m — A3 1:200

DESIGN FILE S:\300001\DESIGN\12D\STAGE 2 CC\DESIGN FILE.project

ALL DIMENSIONS ARE IN METRES. DO NOT SCALE

adw Johnson
Central Coast
5 Pioneer Avenue,
P.O. Box 3717,
Tuggerah N.S.W. 2259
Phone: (02) 4305 4300
Fax: (02) 4305 4399
email: coast@adwjohnson.com.au
www.adwjohnson.com.au
ABN 62 129 445 398

CLIENT: FRASERS PROPERTY

PROPERTY DESCRIPTION: LOT 100 D.P.1262209 & LOT 1 D.P.859537
EPPING ROAD & LYONPARK ROAD,
MACQUARIE PARK
SSDA 8903

SURVEYED: ADW Johnson
DATUM: GDA94 M.G.A. ZONE 56 A.H.D.

PROJECT: PROPOSED SUBDIVISION

PLAN TITLE: RETAINING WALL DETAIL PLAN

PROJECT No.	DISCIPLINE	NUMBER	REV.
300001(2) –	ENG –	551	1

Plotted By: Ben Myles Plot Date: 21/01/22 2:34:27PM Cad File: S:\300001\DRAWINGS\ENGINEERING\CIVIL\STAGE 2 CC ENG\300001(2)-ENG-551.DWG

100mm AT FULL SIZE
This plan includes coloured information. If you have a black and white copy you do not have all of the information. This note is coloured RED.

300001(2)-ENG-561

NOTE:
REFER SHEET 571 FOR STRUCTURAL DETAILS.

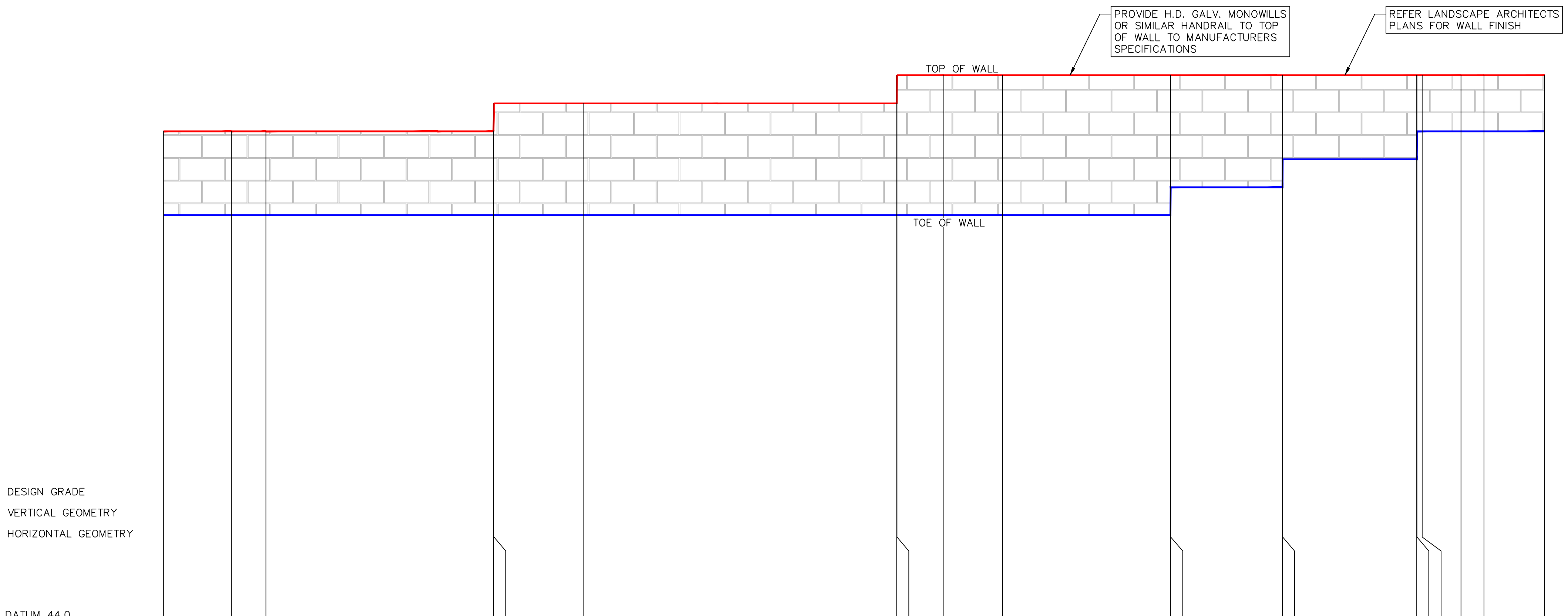

TOP OF WALL	47.5	47.5	47.5	47.5	47.7	47.7	47.7	47.9	47.9	47.9	47.9	47.9	47.9	47.9	47.9	47.9	47.9	47.9	47.9	47.9
WALL HEIGHT	0.6	0.6	0.6	0.6	0.8	0.8	0.8	1	1	1	1	0.8	0.8	0.6	0.6	0.4	0.4	0.4	0.4	0.4
TOE OF WALL	46.9	46.9	46.9	46.9	46.9	46.9	46.9	46.9	46.9	46.9	46.9	47.1	47.1	47.3	47.3	47.5	47.5	47.5	47.5	47.5
CHAINAGE	0	2.42	3.66	11.8	11.81	15	26.21	26.22	27.89	30	36	36.01	40	40.01	44.8	44.81	45	46.38	47.21	49.37

LONGITUDINAL SECTION RW100

HORIZONTAL SCALE 1:100
VERTICAL SCALE 1:20

RW100 – SETOUT TABLE

PT	CHAINAGE	EASTING	NORTHING	BEARING	RAD/SPIRAL	A.LENGTH	DEFL.ANGLE
IP 1	0.000	325810.261	6260294.923	74°32'07.70"			
IP 2	2.425	325812.598	6260295.570				
TC	3.663	325813.555	6260294.784	129°22'25.47"			
IP 3	15.778	325822.927	6260287.093		R = −256.700	24.230	5°24'29.35"
CC	27.893	325832.982	6260280.320	123°57'56.12"			
IP 4	37.138	325840.654	6260275.152		R = 243.300	18.491	4°21'16.13"
CT	46.384	325847.911	6260269.416	128°19'12.25"			
IP 5	47.206	325848.556	6260268.906				
IP 6	49.372	325847.285	6260267.152	215°55'44.73"			

These plans are referred to in certificate no. **16746** approved by:
Eric Hausfeld
Registered Certifier
Registration No: BDC 2416
Categories: Certifier – Subdivision
Certifier – Strata
Certifier – Stormwater
Certifier – Road & Drainage
Certifier – Hydraulic (stormwater)
Land Development Certificates
www.LDC.com.au

DIAL 1100 BEFORE YOU DIG

CONSTRUCTION ISSUE

This plan includes coloured information. If you have a black and white copy you do not have all of the information. This note is coloured RED.

100mm AT FULL SIZE

REV.	DATE	AMENDMENT	DESIGN	DRAWN	CHECKED	APPROVED
1	21.01.22	ISSUED FOR CONSTRUCTION	B.M.	J.J.	B.M.	B.M.

SCALES: A1 1:100 / A3 1:200 (0, 2.5, 5.0m); A1 1:20 / A3 1:40 (0, 0.5, 1.0m)

DESIGN FILE S:\300001\DESIGN\12D\STAGE 2 CC\DESIGN FILE.project

ALL DIMENSIONS ARE IN METRES. DO NOT SCALE

adw johnson
Central Coast
5 Pioneer Avenue,
P.O. Box 3717,
Tuggerah N.S.W. 2259
Phone: (02) 4305 4300
Fax: (02) 4305 4399
email: coast@adwjohnson.com.au
www.adwjohnson.com.au
ABN 62 129 445 398

CLIENT: FRASERS PROPERTY

PROPERTY DESCRIPTION
LOT 100 D.P.1262209 & LOT 1 D.P.859537
EPPING ROAD & LYONPARK ROAD,
MACQUARIE PARK
SSDA 8903

SURVEYED: ADW Johnson
DATUM: GDA94 M.G.A. ZONE 56 A.H.D.

PROJECT: PROPOSED SUBDIVISION

PLAN TITLE: RETAINING WALL LONGITUDINAL SECTION RW100

PROJECT No.	DISCIPLINE	NUMBER	REV.
300001(2)	ENG	561	1

Plotted By: Ben Myles Plot Date: 21/01/22 2:34:32PM Cad File: S:\300001\DRAWINGS\ENGINEERING\CIVIL\STAGE 2 CC ENG\300001(2)-ENG-561.DWG

300001(2)-ENG-562

LEGEND

- DESIGN BY SMEC
- DESIGN BY ADW JOHNSON

NOTE:

1. REFER SHEET 571 FOR STRUCTURAL DETAILS.
2. REFER TO DOUGLAS PARTNERS REPORT REFERENCE R.007.Rev0 DATED 2ND AUGUST FOR GLOBAL STABILITY ASSESSMENT.

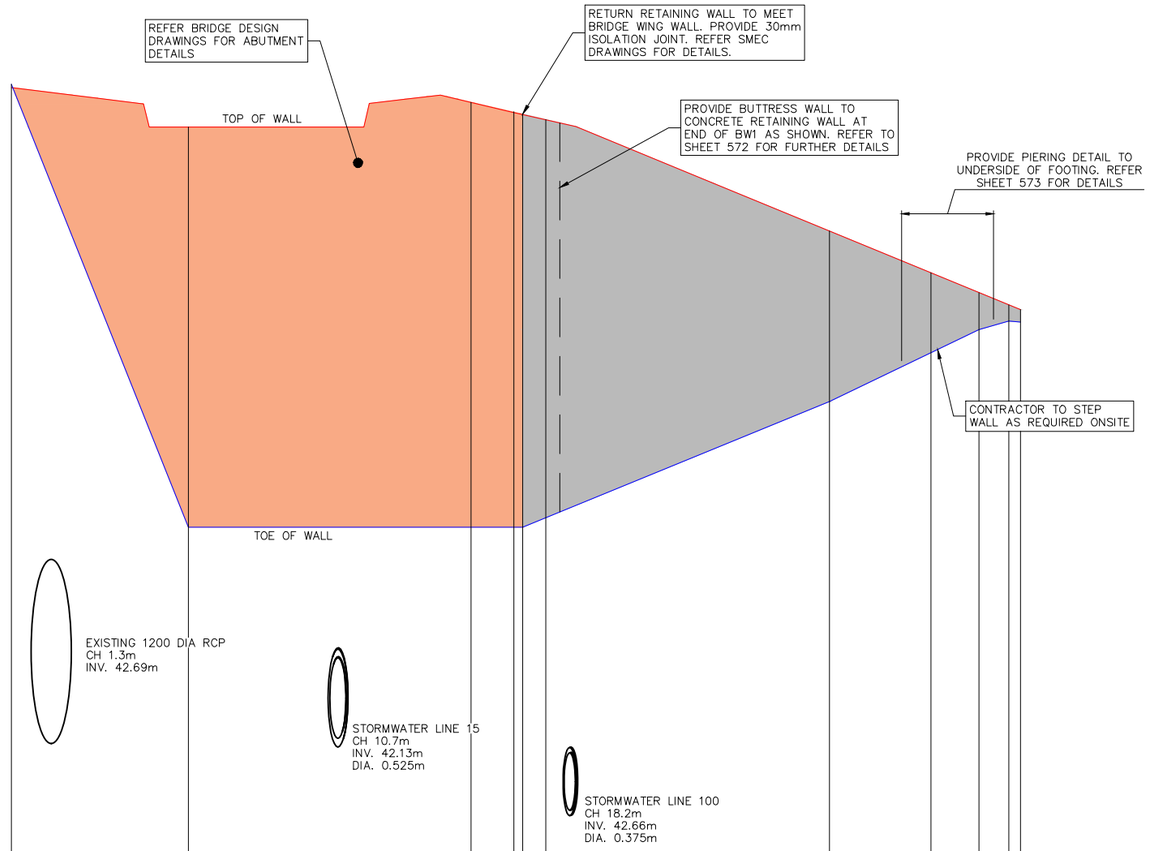

DESIGN GRADE: −50.00% | 0.00% | 8.18% | 9.62% | 5.7−1.88%

VERTICAL GEOMETRY

HORIZONTAL GEOMETRY

DATUM 41.0

TOP OF WALL	47.37	47.11	47.27	47.21	47.2	47.16	46.43	46.16	46.03	45.95	45.92
WALL HEIGHT	−0.02	2.61	2.77	2.71	2.69	2.6	1.11	0.52	0.24	0.1	0.08
TOE OF WALL	47.39	44.5	44.5	44.5	44.5	44.56	45.32	45.64	45.79	45.84	45.84
CHAINAGE	0	5.78	15	16.4	16.69	17.44	26.69	30	31.57	32.54	32.92

LONGITUDINAL SECTION BRIDGE WALL No.1 (BW1)

HORIZONTAL SCALE 1:100
VERTICAL SCALE 1:20

These plans are referred to in certificate no. **16746** approved by:
Eric Hausfeld
Registered Certifier
Registration No: BDC 2416
Categories: Certifier – Subdivision; Certifier – Strata; Certifier – Stormwater; Certifier – Road & Drainage; Certifier – Hydraulic (stormwater)
Land Development Certificates
www.LDC.com.au

DIAL1100 BEFORE YOU DIG

CONSTRUCTION ISSUE

REV.	DATE	AMENDMENT	DESIGN	DRAWN	CHECKED	APPROVED
1	21.01.22	ISSUED FOR CONSTRUCTION	B.M.	J.J.	B.M.	B.M.

SCALES: A1 1:100 (0, 2.5, 5.0m) A3 1:200; A1 1:20 (0, 0.5, 1.0m) A3 1:40

ALL DIMENSIONS ARE IN METRES. DO NOT SCALE

adw Johnson
Central Coast
5 Pioneer Avenue,
P.O. Box 3717,
Tuggerah N.S.W. 2259
Phone: (02) 4305 4300
Fax: (02) 4305 4399
email: coast@adwjohnson.com.au
www.adwjohnson.com.au
ABN 62 129 445 398

CLIENT: FRASERS PROPERTY

PROPERTY DESCRIPTION: LOT 100 D.P.1262209 & LOT 1 D.P.859537, EPPING ROAD & LYONPARK ROAD, MACQUARIE PARK, SSDA 8903

SURVEYED: ADW Johnson | DATUM: GDA94 M.G.A. ZONE 56 A.H.D.

PROJECT: PROPOSED SUBDIVISION

PLAN TITLE: RETAINING WALL LONGITUDINAL SECTION BRIDGE WALL No.1

PROJECT No.	DISCIPLINE	NUMBER	REV.
300001(2)	ENG	562	1

DESIGN FILE S:\300001\DESIGN\12D\STAGE 2 CC\DESIGN FILE.project

Plotted By: Ben Myles Plot Date: 21/01/22 2:34:35PM Cad File: S:\300001\DRAWINGS\ENGINEERING\CIVIL\STAGE 2 CC ENG\300001(2)-ENG-562.DWG

100mm AT FULL SIZE

This plan includes coloured information. If you have a black and white copy you do not have all of the information. This note is coloured RED.

300001(2)-ENG-563

NOTE:

1. REFER CONDITION ASSESSMENT REPORT BY ADWJOHNSON REFERENCE '210601_STRUCTURAL REPORT_EXISTING RETAINING WALL_IVANHOE ESTATE_300001.FINAL' FOR EXISTING WALL CONDITION AND EXCAVATION CONDITIONS
2. REFER TO GEOTECHNICAL REPORT PREPARED BY DOUGLAS PARTNERS REFERENCE 86043.02 FOR CONSTRUCTION METHODOLOGY. WORKS TO BE UNDERTAKEN UNDER GEOTECHNICAL SUPERVISION.
3. CONTRACTOR TO UNDERTAKE DILAPIDATION SURVEY PRIOR TO COMMENCING WORKS.

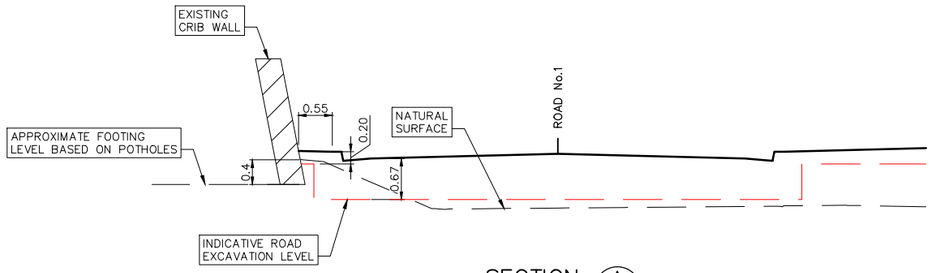

SECTION A
SCALE 1: 50

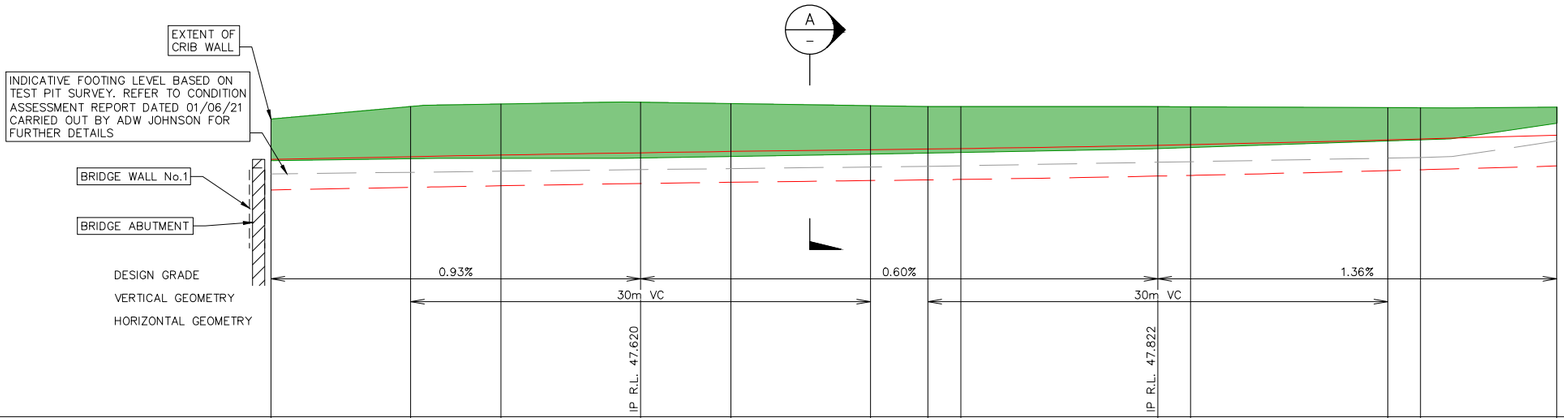

DATUM 39.0

DESIGN VERGE LEVEL	47.39	47.48	47.53	47.61	47.65	47.71	47.73	47.75	47.85	47.87	48.03	48.06	48.18
INDICATIVE ROAD EXCAVATION LEVEL	46.39	46.48	46.53	46.6	46.65	46.7	46.72	46.74	46.85	46.87	47.03	47.06	47.18
EXISTING WALL TOP LEVEL	48.71	49.12	49.2	49.26	49.21	49.14	49.11	49.11	49.11	49.11	49.08	49.07	49.09
EXISTING WALL TOE LEVEL	47.35	47.41	47.43	47.44	47.49	47.56	47.6	47.62	47.74	47.78	47.99	48.02	48.57
CUT\FILL (DESIGN VERGE LEVEL TO EXISTING WALL TOE)	0.05	0.07	0.11	0.17	0.17	0.15	0.14	0.13	0.11	0.1	0.04	0.03	−0.4
CHAINAGE	0	9.11	15	24.11	30	39.11	42.85	45	57.85	60	72.85	75	83.89

LONGITUDINAL SECTION – EXISTING RETAINING WALL
HORIZONTAL SCALE 1:200
VERTICAL SCALE 1:100

These plans are referred to in certificate no. **16746** approved by:
Eric Hausfeld
Registered Certifier
Registration No: BDC 2416
Categories: Certifier – Subdivision, Certifier – Strata, Certifier – Stormwater, Certifier – Road & Drainage, Certifier – Hydraulic (stormwater)
Land Development Certificates
www.LDC.com.au

DIAL 1100 BEFORE YOU DIG

CONSTRUCTION ISSUE

REV.	DATE	AMENDMENT	DESIGN	DRAWN	CHECKED	APPROVED
1	21.01.22	ISSUED FOR CONSTRUCTION	B.M.	J.J.	B.M.	B.M.

SCALES: A1 1:200 (0, 5.0, 10.0m) A3 1:400; A1 1:100 (0, 2.5, 5.0m) A3 1:200; A1 1:50 (0, 1.25, 2.5 m) A3 1:100

ALL DIMENSIONS ARE IN METRES. DO NOT SCALE

adw Johnson
Central Coast
5 Pioneer Avenue,
P.O. Box 3717,
Tuggerah N.S.W. 2259
Phone: (02) 4305 4300
Fax: (02) 4305 4399
email: coast@adwjohnson.com.au
www.adwjohnson.com.au
ABN 62 129 445 398

CLIENT: FRASERS PROPERTY

PROPERTY DESCRIPTION: LOT 100 D.P.1262209 & LOT 1 D.P.859537
EPPING ROAD & LYONPARK ROAD,
MACQUARIE PARK
SSDA 8903

SURVEYED: ADW Johnson
DATUM: GDA94 M.G.A. ZONE 56 A.H.D.

PROJECT: PROPOSED SUBDIVISION

PLAN TITLE: RETAINING WALL
LONGITUDINAL SECTION
EXISTING RETAINING WALL

PROJECT No.	DISCIPLINE	NUMBER	REV.
300001(2)	ENG	563	1

DESIGN FILE S:\300001\DESIGN\12D\STAGE 2 CC\DESIGN FILE.project

Plotted By: Ben Myles Plot Date: 21/01/22 2:34:39PM Cad File: S:\300001\DRAWINGS\ENGINEERING\CIVIL\STAGE 2 CC ENG\300001(2)-ENG-563.DWG

100mm AT FULL SIZE

This plan includes coloured information. If you have a black and white copy you do not have all of the information. This note is coloured RED.

300001(2)-ENG-564

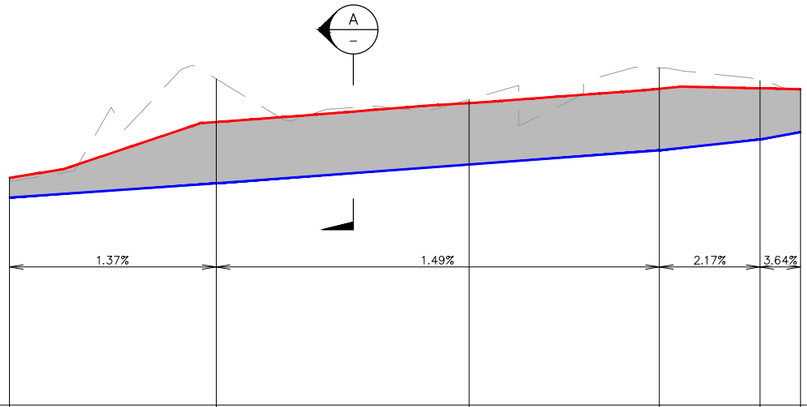

DESIGN GRADE
VERTICAL GEOMETRY
HORIZONTAL GEOMETRY

DATUM 47.0

TOP OF WALL	48.48	48.85	48.97	49.06	49.07	49.06
WALL HEIGHT	0.13	0.4	0.4	0.4	0.33	0.28
EXISTING	48.46	49.13	48.99	49.2	49.12	49.05
TOE OF WALL	48.35	48.45	48.57	48.66	48.73	48.78
CHAINAGE	0	6.75	15	21.21	24.49	25.82

LONGITUDINAL SECTION RW101

HORIZONTAL SCALE 1:100
VERTICAL SCALE 1:20

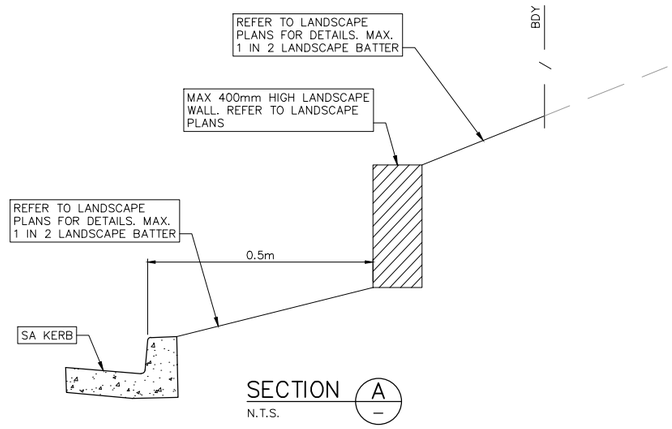

SECTION A –

N.T.S.

These plans are referred to in certificate no. **16746** approved by:
Eric Hausfeld
Registered Certifier
Registration No: BDC 2416
Categories: Certifier – Subdivision, Certifier – Strata, Certifier – Stormwater, Certifier – Road & Drainage, Certifier – Hydraulic (stormwater)
Land Development Certificates
www.LDC.com.au

DIAL 1100 BEFORE YOU DIG

CONSTRUCTION ISSUE

REV.	DATE	AMENDMENT	DESIGN	DRAWN	CHECKED	APPROVED
1	21.01.22	ISSUED FOR CONSTRUCTION	B.M.	J.J.	B.M.	B.M.

SCALES: A1 1:100 (0, 2.5, 5.0m) A3 1:200; A1 1:20 (0, 0.5, 1.0m) A3 1:40

DESIGN FILE S:\300001\DESIGN\12D\STAGE 2 CC\DESIGN FILE.project

ALL DIMENSIONS ARE IN METRES. DO NOT SCALE

adw Johnson
Central Coast
5 Pioneer Avenue,
P.O. Box 3717,
Tuggerah N.S.W. 2259
Phone: (02) 4305 4300
Fax: (02) 4305 4399
email: coast@adwjohnson.com.au
www.adwjohnson.com.au
ABN 62 129 445 398

CLIENT: FRASERS PROPERTY

PROPERTY DESCRIPTION: LOT 100 D.P.1262209 & LOT 1 D.P.859537
EPPING ROAD & LYONPARK ROAD,
MACQUARIE PARK
SSDA 8903

SURVEYED: ADW Johnson
DATUM: GDA94 M.G.A. ZONE 56 A.H.D.

PROJECT: PROPOSED SUBDIVISION

PLAN TITLE: RETAINING WALL LONGITUDINAL SECTION RW101

PROJECT No.	DISCIPLINE	NUMBER	REV.
300001(2) –	ENG –	564	1

Plotted By: Ben Myles Plot Date: 21/01/22 2:34:43PM Cad File: S:\300001\DRAWINGS\ENGINEERING\CIVIL\STAGE 2 CC ENG\300001(2)-ENG-564.DWG

100mm AT FULL SIZE

This plan includes coloured information. If you have a black and white copy you do not have all of the information. This note is coloured RED.

300001(2)-ENG-571

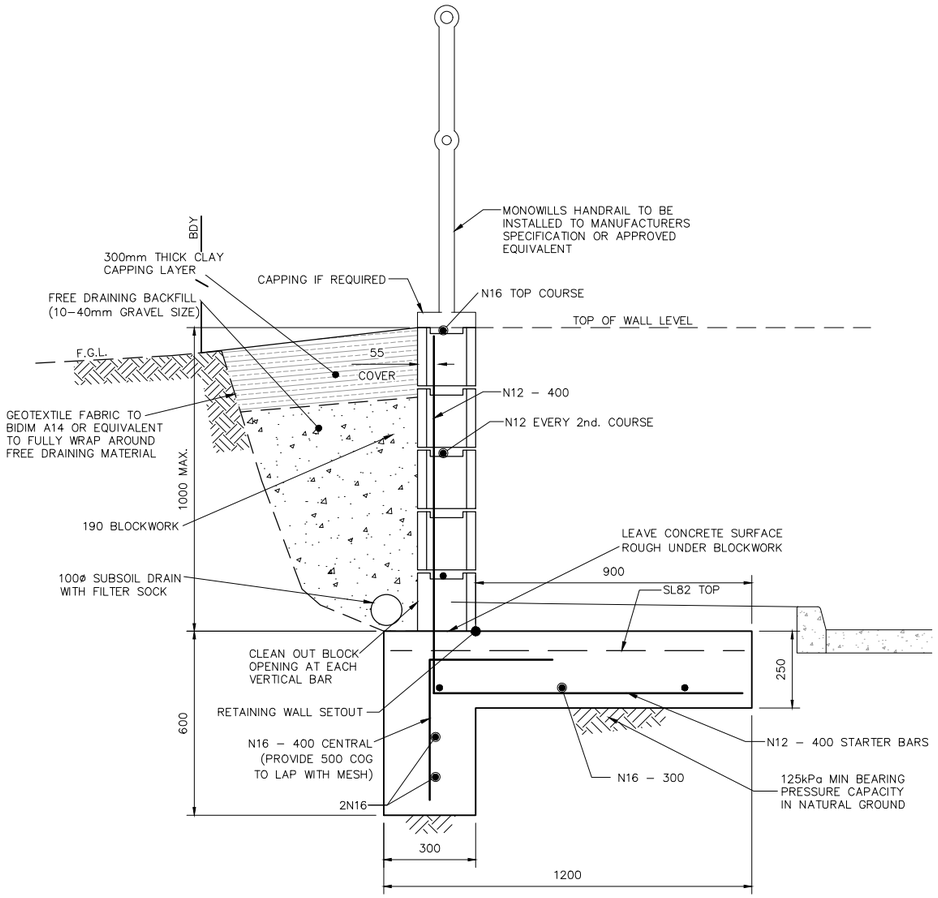

RW100 TYPICAL DETAILS

N.T.S.

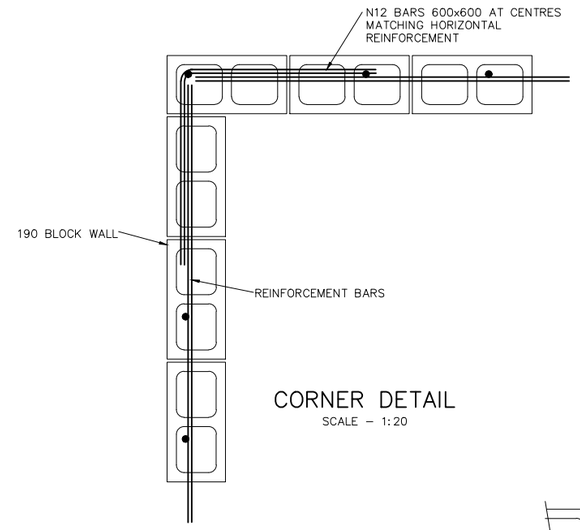

CORNER DETAIL

SCALE - 1:20

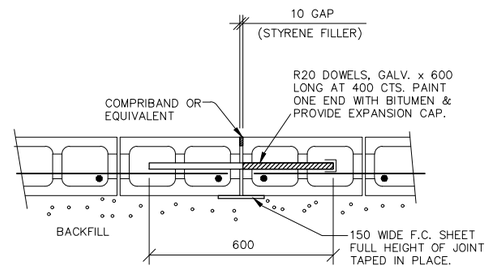

BLOCKWORK DOWEL JOINT

N.T.S.

PROVIDE JOINTS AT 8m MAX CTS.
LAYOUT TO ARCHITECTS SPECIFICATIONS

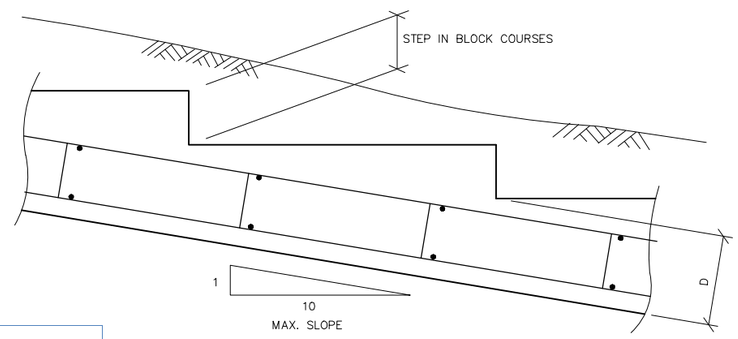

SLOPED STRIP FOOTING

N.T.S.

These plans are referred to in certificate no. **16746** approved by:

Eric Hausfeld
Registered Certifier

Registration No: BDC 2416
Categories: Certifier – Subdivision
Certifier – Strata
Certifier – Stormwater
Certifier – Road & Drainage
Certifier – Hydraulic (stormwater)

Land Development Certificates
www.LDC.com.au

DIAL 1100 BEFORE YOU DIG

CONSTRUCTION ISSUE

REV.	DATE	AMENDMENT	DESIGN	DRAWN	CHECKED	APPROVED
1	21.01.22	ISSUED FOR CONSTRUCTION	B.M.	J.J.	B.M.	B.M.

SCALES: A1 1:20 — 0 — 0.5 — 1.0m — A3 1:40

DESIGN FILE S:\300001\DESIGN\12D\STAGE 2 CC\DESIGN FILE.project

ALL DIMENSIONS ARE IN METRES. DO NOT SCALE

adw Johnson
Central Coast
5 Pioneer Avenue,
P.O. Box 3717,
Tuggerah N.S.W. 2259
Phone: (02) 4305 4300
Fax: (02) 4305 4399
email: coast@adwjohnson.com.au
www.adwjohnson.com.au
ABN 62 129 445 398

CLIENT: FRASERS PROPERTY

PROPERTY DESCRIPTION: LOT 100 D.P.1262209 & LOT 1 D.P.859537
EPPING ROAD & LYONPARK ROAD,
MACQUARIE PARK
SSDA 8903

SURVEYED: ADW Johnson
DATUM: GDA94 M.G.A. ZONE 56 A.H.D.

PROJECT: PROPOSED SUBDIVISION

PLAN TITLE: TYPICAL RETAINING WALL DETAILS & NOTES

PROJECT No.	DISCIPLINE	NUMBER	REV.
300001(2) -	ENG -	571	1

Plotted By: Ben Myles Plot Date: 21/01/22 2:34:46PM Cad File: S:\300001\DRAWINGS\ENGINEERING\CIVIL\STAGE 2 CC ENG\300001(2)-ENG-571.DWG

100mm AT FULL SIZE

This plan includes coloured information. If you have a black and white copy you do not have all of the information. This note is coloured RED.

300001(2)-ENG-572

FOUNDATIONS

1. FOUNDATION TO HAVE AN ALLOWABLE BEARING CAPACITY OF 250kPa MIN. ON A VERY STIFF/HARD CLAY. THE FOUNDATION MATERIAL IS TO BE ASSESSED BY A GEOTECHNICAL ENGINEER PRIOR TO CONSTRUCTION OF THE RETAINING WALL TO CONFIRM THE ASSUMED FOUNDATION DESIGN PARAMETERS.
2. THE DESIGN HAS BEEN CARRIED OUT WITH REFERENCE TO THE GEOTECHNICAL INVESTIGATION REPORT CARRIED OUT BY DOUGLAS PARTNERS 86043.01.R.003.REV0 DATED 22/12/17.
3. REQUIRED MINIMUM ALLOWABLE BEARING PRESSURE 250kPa.
4. THE FOUNDATION SOIL SHALL BE PROOF-ROLLED PRIOR TO PLACEMENT OF CONCRETE FOOTING.

NOTE: GABION CAGES TO USE MACCAFERRI WELDED GABION BASKETS BY GEOFABRICS OR APPROVED EQUIVALENT. BASKETS TO BE 8 X 10 (80MM MAX OPENING) X 2.7MM WIRE DIA STANDARD MESH SPECIFICATION. GABION BASKETS TO BE TREATED WITH GALMAC COATING TO MANUFACTURERS SPECIFICATION. MIN. MESH TENSILE STRENGTH = 50KN/M. GABION BASKETS ARE TO BE PLACED, INFILLED WITH STONE FILL SUBJECT TO GEOTECHNICAL ADVICE AND TIED TOGETHER TO MANUFACTURES SPECIFICATION WITH ALL ASSOCIATED COMPONENTS TO BE GEOFABRICS/MACCAFERRI APPROVED ACCESSORIES. OR APPROVED EQUIVALENT. BASKETS TO BE TIED TO CONCRETE WALL. REFER TO SMEC DRAWINGS FOR FIXING DETAIL.

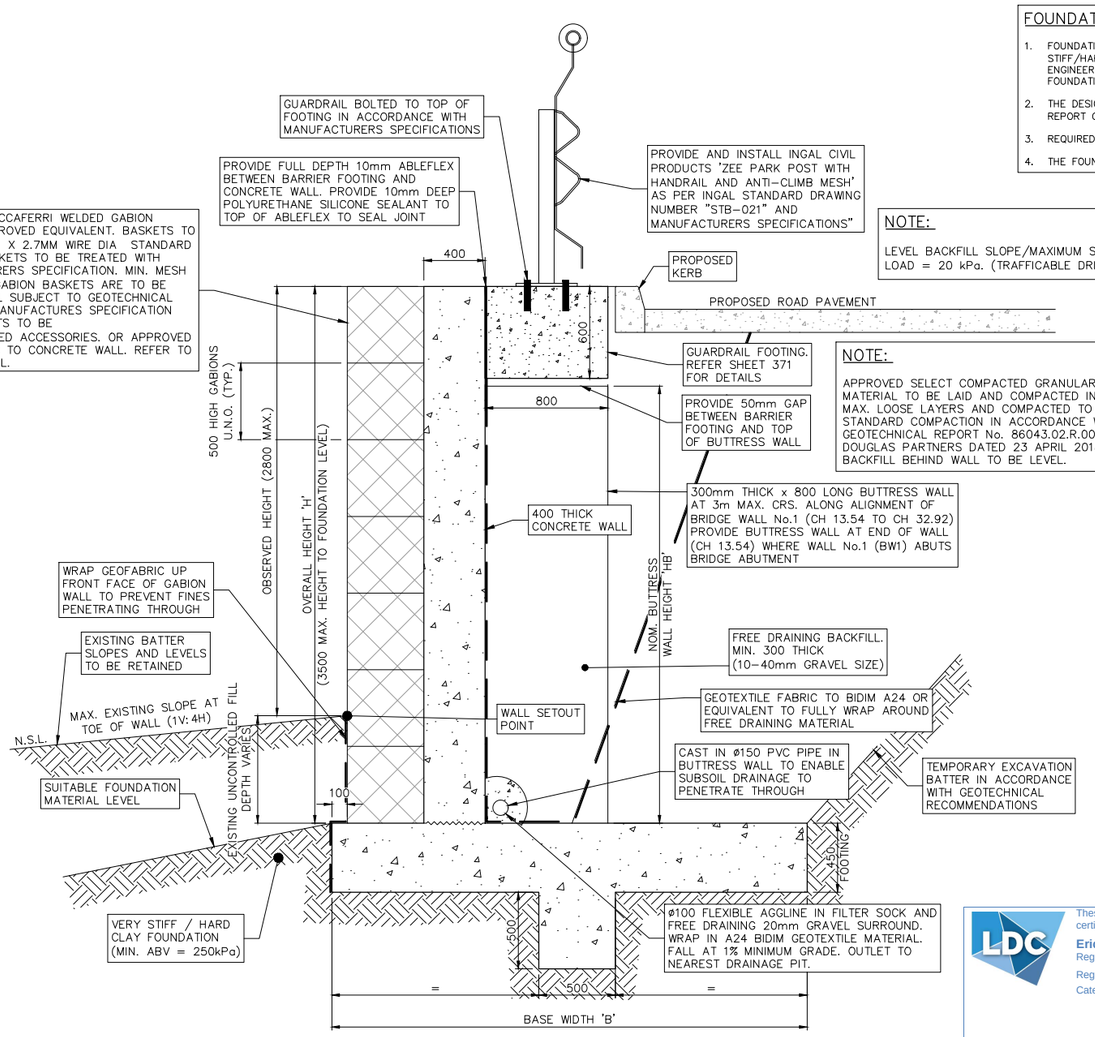

BRIDGE WALL No.1 (BW1) – GENERAL DETAILS

SCALE 1:20

NOTE:

LEVEL BACKFILL SLOPE/MAXIMUM SURCHARGE LOAD = 20 kPa. (TRAFFICABLE DRIVEWAY)

NOTE:

APPROVED SELECT COMPACTED GRANULAR BACKFILL MATERIAL TO BE LAID AND COMPACTED IN 250mm MAX. LOOSE LAYERS AND COMPACTED TO 100% STANDARD COMPACTION IN ACCORDANCE WITH GEOTECHNICAL REPORT No. 86043.02.R.001.Rev0 BY DOUGLAS PARTNERS DATED 23 APRIL 2018. BACKFILL BEHIND WALL TO BE LEVEL.

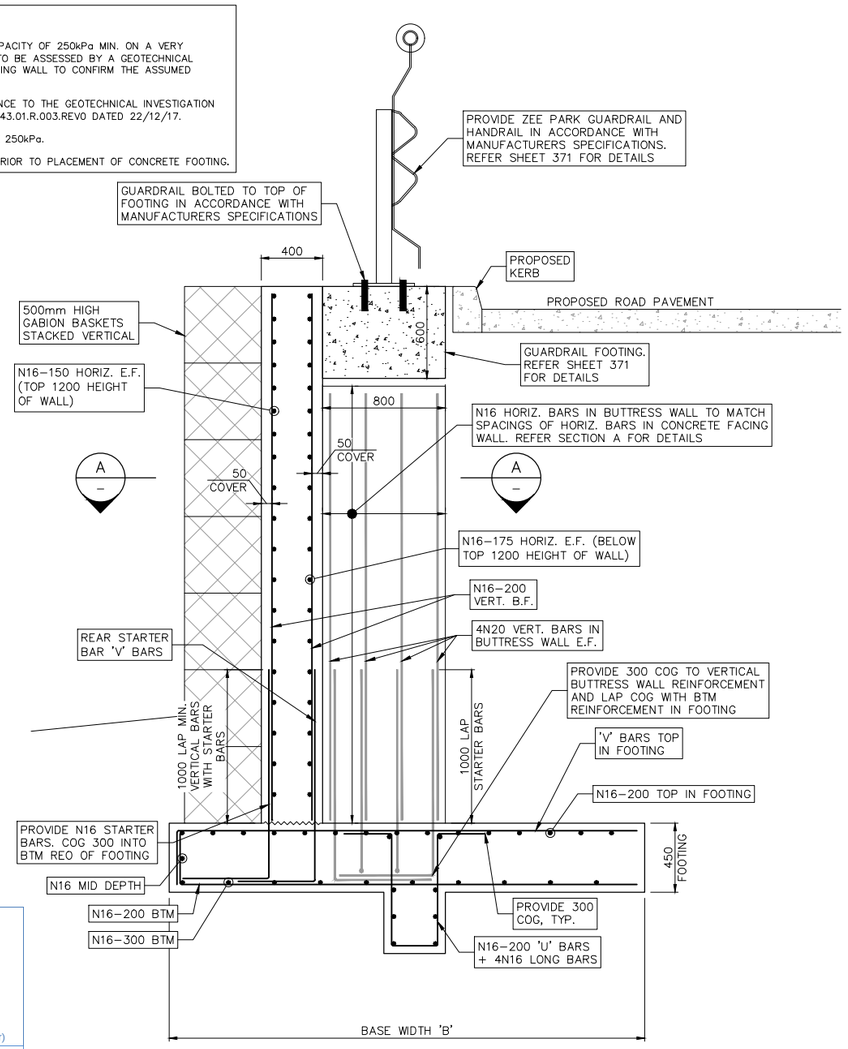

REINFORCEMENT DETAIL FACING WALL/FOOTING/BUTTRESS WALL

SCALE 1:20

These plans are referred to in certificate no. **16746** approved by:

Eric Hausfeld
Registered Certifier

Registration No: BDC 2416
Categories: Certifier – Subdivision; Certifier – Strata; Certifier – Stormwater; Certifier – Road & Drainage; Certifier – Hydraulic (stormwater)

Land Development Certificates
www.LDC.com.au

H. RETAINING WALL DESIGN PARAMETERS

H1: DESIGN OF THE MACCAFERI GABION GRAVITY STRUCTURES ARE BASED UPON THE FOLLOWING PARAMETERS :

GABION WALL REQUIREMENTS

GABION WALL FACE SLOPE	=	1H : 5V
MIN. ROCK DENSITY	=	24kN/m³
MAX. POROSITY OF CONSTRUCTED GABIONS	=	30%
MIN. WET STRENGTH OF AGGREGATE IN ACCORDANCE WITH AS1141.22	=	100kN
MIN. ROCK SIZE	=	100mm
MAX. ROCK SIZE	=	250mm

RETAINED FILL

BACKFILL MATERIAL DESCRIPTION	=	GRANULAR ENGINEERED FILL
EFFECTIVE INTERNAL FRICTION ANGLE	=	30°
EFFECTIVE COHESION	=	0kPa
BACKFILL UNIT WEIGHT	=	20kN/m³

FOUNDATION MATERIAL

FOUNDATION MATERIAL DESCRIPTION	=	VERY STIFF/HARD CLAY
MIN. ALLOWABLE BEARING CAPACITY	=	250kPa
EFFECTIVE INTERNAL FRICTION ANGLE	=	28°
EFFECTIVE COHESION	=	7kPa
FOUNDATION UNIT WEIGHT	=	19kN/m³
UNDRAINED SHEAR STRENGTH	=	120kPa

H2: LIVE LOADS APPLIED TO STRUCTURES :

2. LIVE LOAD CONSTRUCTION SURCHARGE – 10kPa
3. LIVE LOAD TRAFFIC SURCHARGE – 20kPa

H3: HYDROSTATIC FORCES= N/A

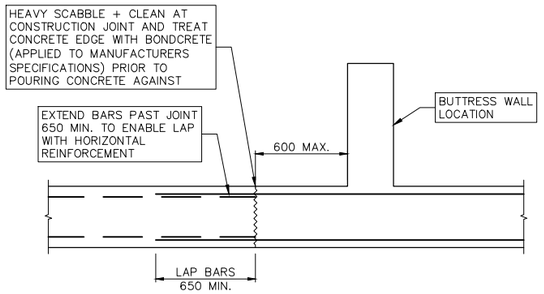

WALL CONSTRUCTION JOINT DETAIL (POUR BREAK)

SCALE 1:20

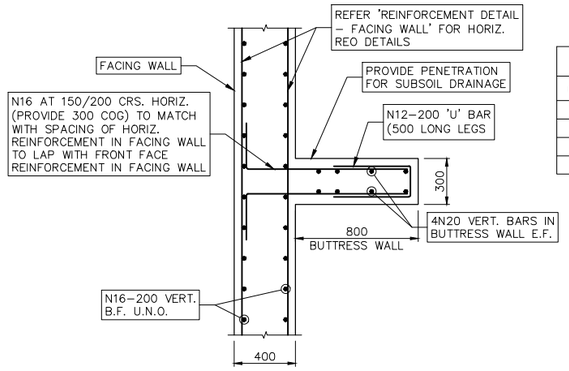

SECTION A

SCALE 1: 20

BRIDGE WALL No.1 (BW1) – DIMENSIONS

OVERALL HEIGHT 'H'	BASE WIDTH	NOMINAL BUTTRESS WALL HEIGHT	'V' BAR REQUIRED	'V' BAR STARTER BAR HEIGHT
3500–2500	3100	UP TO 2900 HIGH	N20–200	1000
2500–1500	2600	UP TO 1900 HIGH	N20–200	1000
1500–1000	1800	UP TO 900 HIGH	N20–200	1000
1000	1800	NOT REQUIRED	N20–200	1000

NOTE:

A GEOTECHNICAL ENGINEER IS TO ASSESS THE SITE UPON INITIAL CLEARING AND EXCAVATION FOR CONSTRUCTION OF THE RETAINING WALL FOOTING TO VERIFY THAT THE SITE CONDITIONS ARE CONSISTENT WITH THE GEOTECHNICAL PARAMETERS PROVIDED ON THE DESIGN DRAWINGS. THE GEOTECHNICAL ENGINEER MAY NEED TO TO PROVIDE ADDITIONAL GEOTECHNICAL POTHOLING/TESTING TO VERIFY THE GEOLOGICAL LAYERS BEYOND THE OBSERVED EXCAVATION LAYER, AS REQUIRED.

NOTE:

A GLOBAL STABILITY ASSESSMENT FOR THE BRIDGE RETAINING WALL NO. 1 (BW1) HAS BEEN DETAILED IN REPORT NO. 86043.06.R.007.REV0 DATED 2/8/21 BY DOUGLAS PARTNERS. REFERENCE IS TO BE MADE TO THIS REPORT FOR GEOTECHNICAL PARAMETERS USED IN THE ASSESSMENT AND PROPOSED RECOMMENDATION FOR CONSTRUCTION BASED ON THE OUTCOME OF THE SLOPE STABILITY ASSESSMENT.

DIAL 1100 BEFORE YOU DIG

CONSTRUCTION ISSUE

REV.	DATE	AMENDMENT	DESIGN	DRAWN	CHECKED	APPROVED
1	21.01.22	ISSUED FOR CONSTRUCTION	B.M.	J.J.	B.M.	B.M.

SCALES: A1 1:20 — 0 — 0.5 — 1.0m — A3 1:40

DESIGN FILE S:\300001\DESIGN\12D\STAGE 2 CC\DESIGN FILE.project

ALL DIMENSIONS ARE IN METRES. DO NOT SCALE

adw Johnson
Central Coast
5 Pioneer Avenue,
P.O. Box 3717,
Tuggerah N.S.W. 2259
Phone: (02) 4305 4300
Fax: (02) 4305 4399
email: coast@adwjohnson.com.au
www.adwjohnson.com.au
ABN 62 129 445 398

CLIENT: FRASERS PROPERTY

PROPERTY DESCRIPTION: LOT 100 D.P.1262209 & LOT 1 D.P.859537, EPPING ROAD & LYONPARK ROAD, MACQUARIE PARK, SSDA 8903

SURVEYED: ADW Johnson | DATUM: GDA94 M.G.A. ZONE 56 A.H.D.

PROJECT: PROPOSED SUBDIVISION

PLAN TITLE: TYPICAL GABION WALL DETAILS & NOTES

PROJECT No.	DISCIPLINE	NUMBER	REV.
300001(2) –	ENG –	572	1

Plotted By: Ben Myles Plot Date: 21/01/22 2:34:51PM Cad File: S:\300001\DRAWINGS\ENGINEERING\CIVIL\STAGE 2 CC ENG\300001(2)-ENG-572.DWG

100mm AT FULL SIZE
This plan includes coloured information. If you have a black and white copy you do not have all of the information. This note is coloured RED.

300001(2)-ENG-573

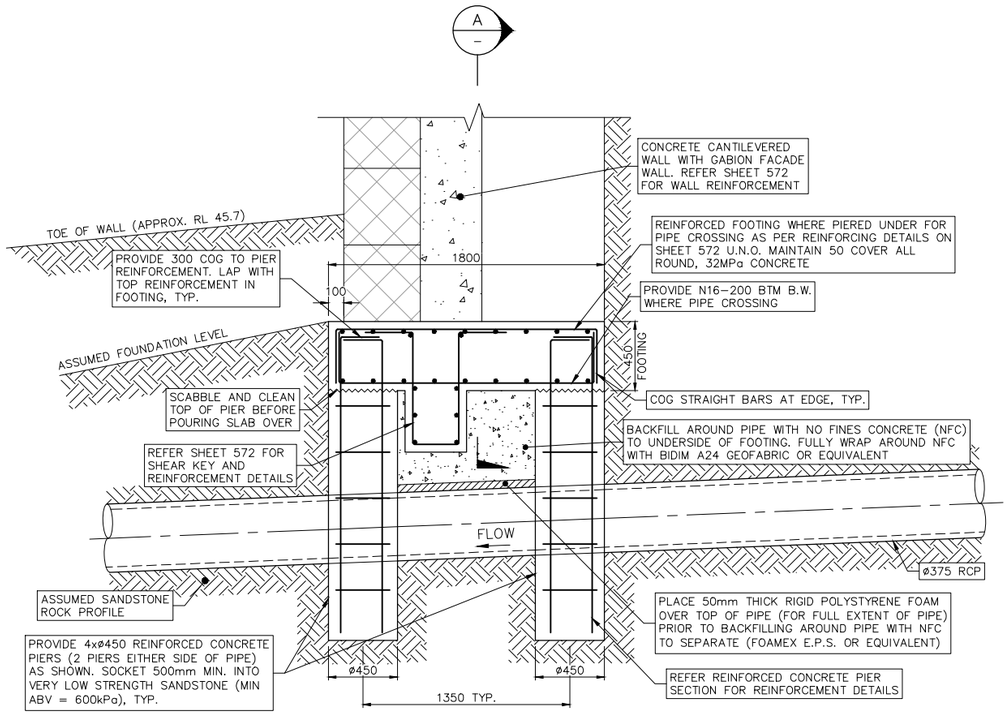

GABION WALL BRIDGING STRUCTURE DETAIL

SCALE 1:20

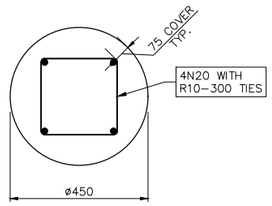

REINFORCED CONCRETE PIER SECTION

(CONCRETE GRADE = 32MPa)

SCALE 1:10

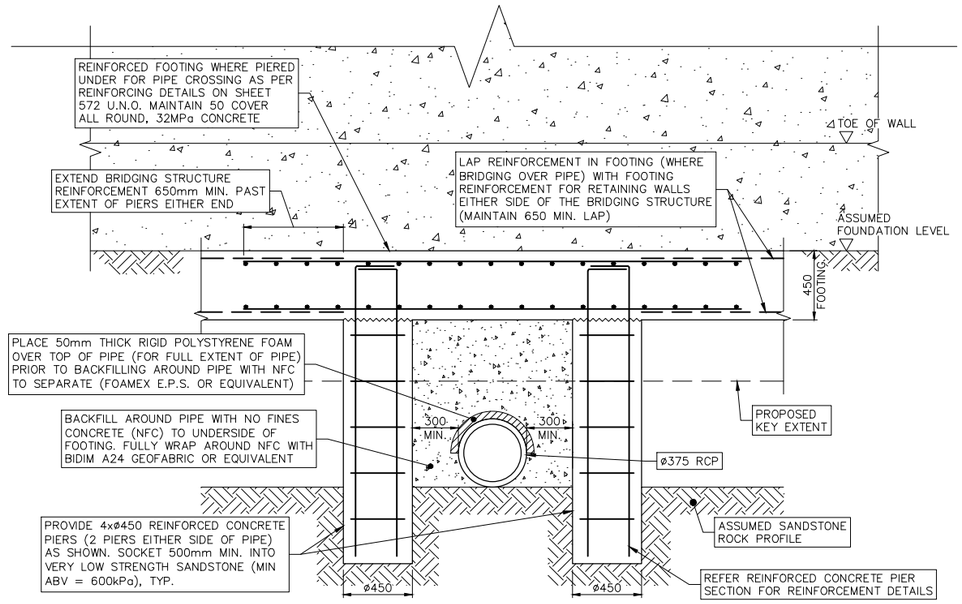

SECTION A

SCALE 1: 20

These plans are referred to in certificate no. **16746** approved by:

Eric Hausfeld
Registered Certifier

Registration No: BDC 2416

Categories: Certifier – Subdivision
Certifier – Strata
Certifier – Stormwater
Certifier – Road & Drainage
Certifier – Hydraulic (stormwater)

Land Development Certificates
www.LDC.com.au

DIAL 1100 BEFORE YOU DIG

CONSTRUCTION ISSUE

REV.	DATE	AMENDMENT	DESIGN	DRAWN	CHECKED	APPROVED
1	21.01.22	ISSUED FOR CONSTRUCTION	B.M.	J.J.	B.M.	B.M.

SCALES: A1 1:10 (0, 0.25, 0.5m) A3 1:20; A1 1:20 (0, 0.5, 1.0m) A3 1:40

DESIGN FILE S:\300001\DESIGN\12D\STAGE 2 CC\DESIGN FILE.project

ALL DIMENSIONS ARE IN METRES. DO NOT SCALE

adw Johnson
Central Coast
5 Pioneer Avenue,
P.O. Box 3717,
Tuggerah N.S.W. 2259
Phone: (02) 4305 4300
Fax: (02) 4305 4399
email: coast@adwjohnson.com.au
www.adwjohnson.com.au
ABN 62 129 445 398

CLIENT: FRASERS PROPERTY

PROPERTY DESCRIPTION: LOT 100 D.P.1262209 & LOT 1 D.P.859537
EPPING ROAD & LYONPARK ROAD,
MACQUARIE PARK
SSDA 8903

SURVEYED: ADW Johnson

DATUM: GDA94 M.G.A. ZONE 56 A.H.D.

PROJECT: PROPOSED SUBDIVISION

PLAN TITLE: TYPICAL GABION WALL BRIDGING STRUCTURE DETAILS

PROJECT No.	DISCIPLINE	NUMBER	REV.
300001(2) –	ENG –	573	1

Plotted By: Ben Myles Plot Date: 21/01/22 2:34:56PM Cad File: S:\300001\DRAWINGS\ENGINEERING\CIVIL\STAGE 2 CC ENG\300001(2)-ENG-573.DWG

100mm AT FULL SIZE
This plan includes coloured information. If you have a black and white copy you do not have all of the information. This note is coloured RED.

300001(2)-ENG-574

GABION WALL – GENERAL NOTES:

A: GENERAL

A1: ALL DIMENSIONS SHOWN ARE IN MILLIMETRES U.N.O
ALL REDUCED LEVELS ARE IN METRES.

A2: THE OWNER OR CONTRACTOR IS RESPONSIBLE FOR REVIEWING AND VERIFYING THAT THE ACTUAL SITE CONDITIONS ARE AS DESCRIBED PRIOR TO AND DURING CONSTRUCTION.

A3: ALL PLAN DIMENSIONS MUST BE VERIFIED BY THE CONTRACTOR. THE PROJECT ENGINEER MUST BE NOTIFIED OF ANY DISCREPANCIES BEFORE THE CONTRACTOR BEGINS WITH WORK.

A4: STRUCTURES SUCH AS BUILDING FOOTINGS, SWIMMING POOLS, RETAINING WALLS, STORAGE OR SOLID PANEL FENCING MUST BE KEPT CLEAR SUCH THAT THE LOAD IS NOT PLACED BETWEEN A LINE PROJECTED BEHIND THE WALL FROM THE FOUNDING LEVEL AT 1V : 1.5H AND THE WALL.

A5: PRECAUTIONS MUST BE TAKEN WHERE OTHER BUILDING WORK, SERVICE TRENCHES, GARDEN BEDS ETC. MAY BE EXCAVATED IN FRONT OF THE WALL.

A6: WHERE A SAFETY FENCE IS REQUIRED BY COUNCIL IT SHALL BE SET BACK A MINIMUM OF 500 mm FROM THE TOP OF THE WALL.

A7: MACCAFERRI GABION WALLS MAY BE DESIGNED AS EITHER MASS GRAVITY OR SEMI-GRAVITY STRUCTURES. DETAILED DESIGN ADVICE MAY BE SOUGHT FROM MACCAFERRI PTY LTD.

A8: A NON-WOVEN GEOTEXTILE IS TO BE USED IN BACKFILL BETWEEN THE SOIL AND THE RETAINING WALL.

A9: GABION BASKETS MUST BE GALVANIZED AND FULLY LACED TO BOTH UPPER AND LOWER NEIGHBOURING BASKETS.

A10: GABION MUST BE DIVIDED INTO CELL OF LENGTH OF NOT GREATER THAN 2m.

A11: THE FRONT FACE AND OTHER EXPOSED FACES OF THE GABION WALL SHALL BE HAND PACKED WITH ROCKS TO PROVIDE A SMOOTH CONSISTENT FINISH.

A12: BACKFILL IS TO BE GRANULAR, FREE DRAINING AND COMPACTED TO THE REQUIREMENTS MADE IN DOUGLAS PARTNERS GEOTECHNICAL REPORT 2018-04-26.86043.R.001.REVO DATED 23/4/18.

A13: ALL SURFACE RUN-OFF SHOULD BE DIRECTED AWAY FROM THE BACK OF THE WALL SO AS TO PREVENT INFILTRATION OF SUCH SURFACE RUN-OFF INTO THE GRANULAR BACKFILL.

A14: PROVIDE AN UPSTREAM FLUSHING POINT TO THE SUB-SOIL DRAINAGE LINE LOCATED BEHIND THE RETAINING WALL.

A15: WHERE THE WALL IS FOUNDED ON BEDROCK THE PREPARATION OF THE FOUNDATION SHOULD INCLUDED THE REMOVAL OF ALL LOOSE ROCK AND SOIL. ANY IRREGULARITIES IN THE BEDROCK SHOULD BE FILLED WITH MASS CONCRETE (F'C = 25MPa).

B: GABION ROCK INFILL

B1: SUPPLY GABION ROCK OF IGNEOUS ORIGIN WHICH IS DENSE, CLEAN, HARD AND FREE FROM DEFECTS, CRACKS, SEAMS, CLEAVAGE PLANES, WEATHERING, DEGRADATION AND PERVASIVE CHEMICAL ALTERATION THAT WILL AFFECT ROCK DURABILITY. ROCK MAY BE EITHER QUARRIED ROCK OR SELECTED RIVER COBBLE.

B2: SUPPLY ROCKFILL MEETING THE QUALITY CRITERIA AS SPECIFIED BELOW:

B2.1 DIMENSIONS
SUPPLY ROCK GENERALLY UNIFORM IN SHAPE, FREE FROM ELONGATED FLAT OR FLAKY PIECES. THE ROCKFILL SHALL HAVE NO MORE THAN 10% MIS-SHAPEN PARTICLES. THE DEFINITION OF MIS-SHAPEN PARTICLES SHALL BE AS DETERMINED BY TEST METHOD AS1141.14 (CALIPER RATIO 3:1).

B2.2 DURABILITY
THE ROCK SUPPLIED SHALL BE TESTED IN ACCORDANCE WITH AS1141.22 FOR WET/DRY STRENGTH VARIATION. THE ROCK TESTED SHALL BE REPRESENTATIVE OF THE ROCK TO BE SUPPLIED AS SHALL HAVE A MINIMUM DRY STRENGTH OF 200kN AND A MINIMUM WET STRENGTH OF 100kN. THE MAXIMUM WET/DRY STRENGTH VARIATION SHALL BE NO MORE THAN 50%.

B2.3 GRADING
SUPPLY ROCKFILL WHICH IS UNIFORMLY GRADED BETWEEN A MAXIMUM OF GENERALLY 200mm (BUT NO MORE THAN 250mm) AND A MINIMUM OF NOT GREATER THAN 10% FINER THAN 75mm.

B2.4 FREQUENCY OF TESTING
THE SUPERINTENDANT SHALL WITH DUE REGARD TO THE CONTRACT NOMINATE THE FREQUENCY AND COMPLIANCE REQUIREMENTS FOR THE ROCKFILL. ALL ROCKFILL NOT MEETING THE REQUIREMENTS OF THE SPECIFICATION WILL BE REJECTED. ALL REJECTED ROCKFILL SHALL BE DISPOSED OF IN AN APPROVED MANNER AT THE EXPENSE OF AND BY THE CONTRACTOR.

C: MACCAFERRI GABION CONSTRUCTION

C1: REFER TO MACCAFERRI ASSEMBLY & ERECTION LEAFLETS AND INSTALLATION SEQUENCE DRAWING.

D: MACCAFERRI GABION UNITS

D1: MACCAFERRI GABION UNITS ARE TO BE STORED, TRANSPORTED, HANDLED AND PLACED TO THE MANUFACTURERS SPECIFICATION. THEY SHALL NOT BE DAMAGED OR DISPLACED DURING PLACEMENT AND COMPACTION OF THE BACKFILL.

D2: THE GABION UNITS SHALL BE MANUFACTURED IN ACCORDANCE WITH THE MACCAFERRI SPECIFICATION (AVAILABLE UPON REQUEST). GABION UNITS MAY BE SUPPLIED AS A HEAVILY GALVANISED DOUBLE TWISTED WOVEN HEXAGONAL WIRE MESH COMPLYING WITH INTERNATIONAL STANDARDS BS1052-1980 & BS443-1982. FOR SPECIFIC APPLICATIONS THE WIRE MAY BE ADDITIONALLY COATED WITH PVC.

D3: IMPROVED LONGETIVITY AND DURABILITY CAN BE ACHIEVED USING IMPROVED TECHNOLOGY GALMAC GABION UNITS CONFORMING TO A.S.T.M 856 & EN/EURONORM 10244/2.

D4: THE SPECIFIER SHALL NOMINATE THE COATING REQUIRED DEPENDANT UPON THE GABION EXPOSURE CONDITIONS.

E: GEOTEXTILE / DRAINAGE

E1: A NON-WOVEN MACCAFERRI GEOTEXTILE SHALL BE INCORPORATED AT THE REAR FACE OF THE MACCAFERRI GABION UNITS.

E2: IF THE BACKFILL IS NOT FREE-DRAINING, DRAINAGE PROVISIONS SHALL BE SPECIFIED BY THE PROJECT ENGINEER.

E3: ALL SUBSURFACE DRAINS TO HAVE OUTLETS AT LOW POINTS AND A POSITIVE DRAINAGE PATH. PROVIDE SUBSOIL DRAINAGE PIPES WITH FLUSHING POINTS AT HIGH POINTS AND INTERMEDIATE RODDING POINTS.

E4: ALL SUBSURFACE DRAINAGE SHALL BE PROPERLY DISCHARGED TO NEARBY PIT/DRAINAGE SYSTEM.

F. DESIGN ASSUMPTIONS

F1: THE DESIGN PRESENTED HEREIN IS BASED ON SOIL PARAMETERS, FOUNDATION CONDITIONS, GROUNDWATER CONDITIONS, STATED IN THE RELEVANT GEOTECH REPORT. SHOULD ACTUAL CONDITIONS VARY FORM THOSE ASSUMED, THE PROJECT ENGINEER SHOULD BE NOTIFIED PRIOR TO CONSTRUCTION TO DETERMINE IF REDESIGN OF THE PROPOSED STRUCTURE IS REQUIRED.

GENERAL INSTALLATION NOTES

1. THE GABION WALL IS TO BE PREPARED AND INSTALLED IN ACCORDANCE WITH THE MANUFACTURER'S SPECIFICATION. REFER TO THE MANUFACTURE'S INSTALLATION GUIDELINES FOR FURTHER DETAILS.
2. ALL UTILITIES WITHIN THE VICINITY OF THE WALL MUST BE IDENTIFIED/RELOCATED PRIOR TO EXCAVATION.
3. EXCAVATE DOWN TO THE GABION WALL FOUNDATION LEVEL. ANY TEMPORARY EXCAVATION STABILITY MEASURES ARE TO BE ASSESSED BY A QUALIFIED GEOTECHNICAL ENGINEER UPON EXCAVATION. PREPARE FOUNDATION IN ACCORDANCE WITH THE REQUIREMENTS ON THE DESIGN DRAWINGS. FOUNDATION IS TO BE LEVEL PRIOR TO PLACING THE FIRST LAYER OF THE GABION WALL. THE FOUNDATION IS TO BE ASSESSED BY A QUALIFIED GEOTECHNICAL ENGINEER TO VERIFY THE PARAMETERS ARE IN ACCORDANCE WITH THE REQUIREMENTS OF THESE DRAWINGS.
4. INSTALL THE FIRST LAYER OF GABION CAGE ON THE FOUNDATION.
5. INFILL THE GABION CAGE WITH ROCKS TO THE SPECIFICATIONS AS INDICATED ON THE GENERAL NOTES AND MACCAFERRI INSTALLATION GUIDELINES. MECHANICALLY INTERLOCKING ROCKS ARE PREFERRED. THE ROCKS SHALL HAVE A DEGREE IN ANGULARITY AND A RANGE IN SIZE. USING SMALL ROCKS, 100 TO 150MM IN SIZE, ALLOWS THE CAGE TO BE ECONOMICALLY FILLED. IT WILL ALSO PROVIDE BETTER LOAD DISTRIBUTION AND ADAPTABILITY OF THE STRUCTURE TO DEFORMATION.
6. INSTALL THE NON-WOVEN GEOTEXTILE AND SUBSOIL DRAINAGE LAYER (IF APPLICABLE).
7. PLACE THE APPROVED SELECT GRANULAR FILL IN 250mm MAX LOOSE LAYERS BEHIND THE RETAINING WALL AND COMPACT TO THE COMPACTION REQUIREMENTS AS NOTED ON THIS SHEET PROGRESSIVELY TO A MAXIMUM COMPACTED HEIGHT OF 1m. NOTE: MAXIMUM COMPACTED HEIGHTS TO BE 1m PRIOR TO INSTALLATION OF THE SUCCESSIVE 1m HIGH GABION WALL UNITS.
8. EXISTING UNCONTROLLED FILL IN FRONT OF GABION WALL THAT WAS REMOVED TO ENABLE CONSTRUCTION OF THE WALL IS TO BE RE-PLACED IN 250mm LOOSE LAYERS AND HAND COMPACTED TO THE EXISTING NSL AS INDICATED ON THE RETAINING WALL LONG-SECTION ON SHEET 562. PROVIDE GEOTEXTILE BETWEEN THE GABION WALL UNITS AND THE FILL MATERIAL.
9. REPEAT FOR THE NEXT SUCCESSIVE 1m MAX GABION WALL HEIGHTS UNTIL COMPLETION OF WALL HEIGHT.

These plans are referred to in certificate no. **16746** approved by:
Eric Hausfeld
Registered Certifier
Registration No: BDC 2416
Categories: Certifier – Subdivision; Certifier – Strata; Certifier – Stormwater; Certifier – Road & Drainage; Certifier – Hydraulic (stormwater)
Land Development Certificates
www.LDC.com.au

DIAL 1100 BEFORE YOU DIG

CONSTRUCTION ISSUE

REV.	DATE	AMENDMENT	DESIGN	DRAWN	CHECKED	APPROVED
1	21.01.22	ISSUED FOR CONSTRUCTION	B.M.	J.J.	B.M.	B.M.

SCALES: A1 1:10 (0, 0.25, 0.5m); A3 1:20 — A1 1:20 (0, 0.5, 1.0m); A3 1:40

DESIGN FILE S:\300001\DESIGN\12D\STAGE 2 CC\DESIGN FILE.project

ALL DIMENSIONS ARE IN METRES. DO NOT SCALE

adw Johnson
Central Coast
5 Pioneer Avenue,
P.O. Box 3717,
Tuggerah N.S.W. 2259
Phone: (02) 4305 4300
Fax: (02) 4305 4399
email: coast@adwjohnson.com.au
www.adwjohnson.com.au
ABN 62 129 445 398

CLIENT: FRASERS PROPERTY

PROPERTY DESCRIPTION: LOT 100 D.P.1262209 & LOT 1 D.P.859537
EPPING ROAD & LYONPARK ROAD,
MACQUARIE PARK
SSDA 8903

SURVEYED: ADW Johnson
DATUM: GDA94 M.G.A. ZONE 56 A.H.D.

PROJECT: PROPOSED SUBDIVISION

PLAN TITLE: TYPICAL GABION WALL NOTES

PROJECT No.	DISCIPLINE	NUMBER	REV.
300001(2)	ENG	574	1

Plotted By: Ben Myles Plot Date: 21/01/22 2:34:59PM Cad File: S:\300001\DRAWINGS\ENGINEERING\CIVIL\STAGE 2 CC ENG\300001(2)-ENG-574.DWG

100mm AT FULL SIZE

This plan includes coloured information. If you have a black and white copy you do not have all of the information. This note is coloured RED.

300001(2)-ENG-601

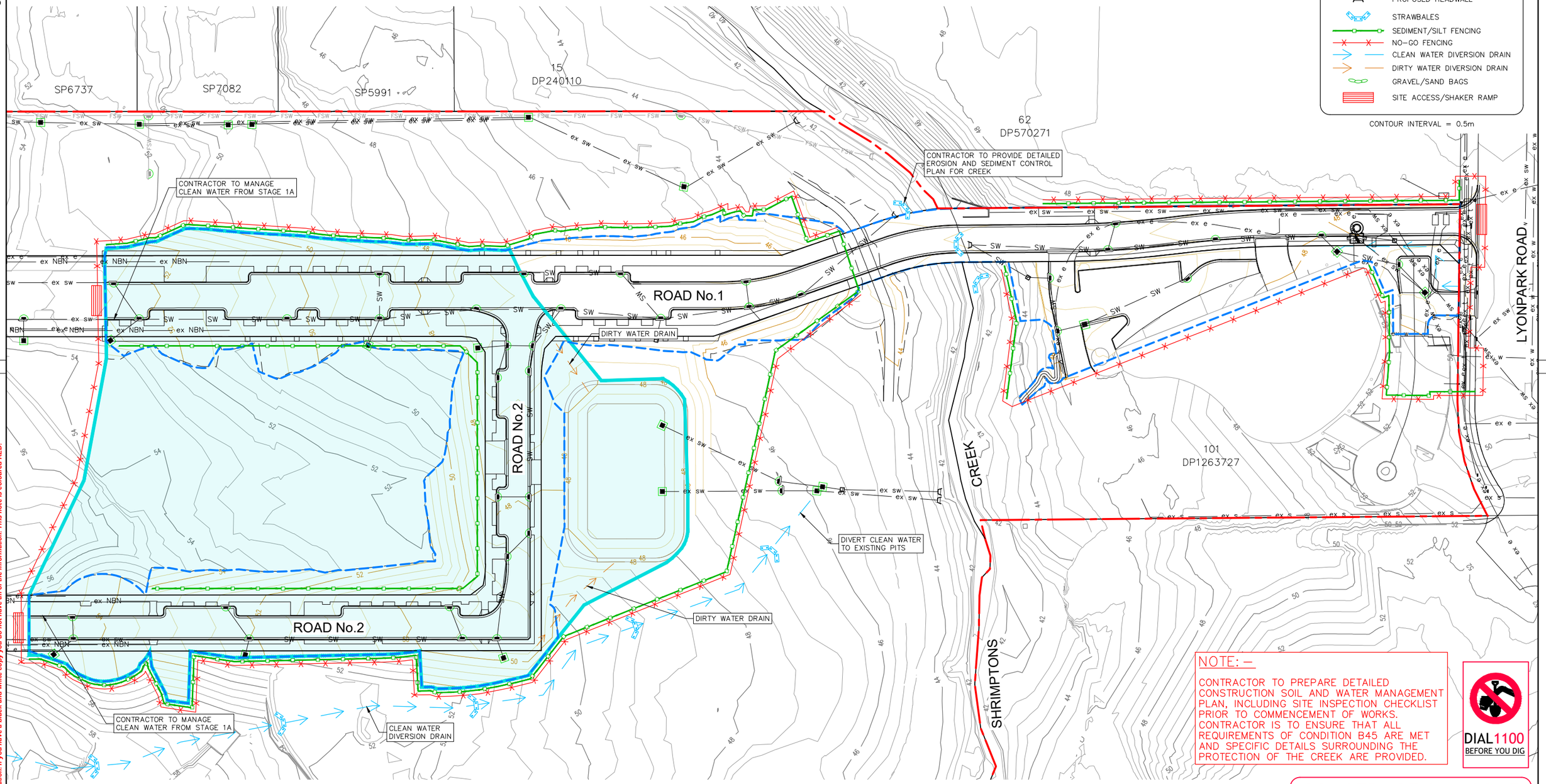

These plans are referred to in certificate no. **16746** approved by:
Eric Hausfeld
Registered Certifier
Registration No: BDC 2416
Categories: Certifier – Subdivision, Certifier – Strata, Certifier – Stormwater, Certifier – Road & Drainage, Certifier – Hydraulic (stormwater)
Land Development Certificates
www.LDC.com.au

NOTE:–

CONTRACTOR TO PREPARE DETAILED CONSTRUCTION SOIL AND WATER MANAGEMENT PLAN, INCLUDING SITE INSPECTION CHECKLIST PRIOR TO COMMENCEMENT OF WORKS. CONTRACTOR IS TO ENSURE THAT ALL REQUIREMENTS OF CONDITION B45 ARE MET AND SPECIFIC DETAILS SURROUNDING THE PROTECTION OF THE CREEK ARE PROVIDED.

EROSION & SEDIMENT CONTROL PLAN

SCALE 1:500

CONSTRUCTION ISSUE

REV.	DATE	AMENDMENT	DESIGN	DRAWN	CHECKED	APPROVED
1	21.01.22	ISSUED FOR CONSTRUCTION	B.M.	J.J.	B.M.	B.M.

SCALES: A1 1:500 (0, 12.5, 25.0m) A3 1:1000

DESIGN FILE S:\300001\DESIGN\12D\STAGE 2 CC\DESIGN FILE.project

ALL DIMENSIONS ARE IN METRES. DO NOT SCALE

adw Johnson
Central Coast
5 Pioneer Avenue,
P.O. Box 3717,
Tuggerah N.S.W. 2259
Phone: (02) 4305 4300
Fax: (02) 4305 4399
email: coast@adwjohnson.com.au
www.adwjohnson.com.au
ABN 62 129 445 398

CLIENT: FRASERS PROPERTY

PROPERTY DESCRIPTION: LOT 100 D.P.1262209 & LOT 1 D.P.859537, EPPING ROAD & LYONPARK ROAD, MACQUARIE PARK, SSDA 8903

SURVEYED: ADW Johnson
DATUM: GDA94 M.G.A. ZONE 56 A.H.D.

PROJECT: PROPOSED SUBDIVISION
PLAN TITLE: EROSION & SEDIMENT CONTROL PLAN

PROJECT No.	DISCIPLINE	NUMBER	REV.
300001(2) –	ENG –	601	1

Plotted By: Ben Myles Plot Date: 21/01/22 2:35:05PM Cad File: S:\300001\DRAWINGS\ENGINEERING\CIVIL\STAGE 2 CC ENG\300001(2)-ENG-601.DWG

100mm AT FULL SIZE
This plan includes coloured information. If you have a black and white copy you do not have all of the information. This note is coloured RED.

300001(2)-ENG-611

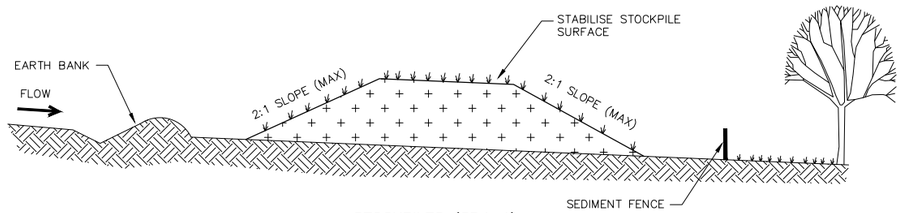

STOCKPILES (SD4–1)

N.T.S.

CONSTRUCTION NOTES:

1. PLACE STOCKPILES MORE THAN 2 (PREFERABLY 5) METRES FROM EXISTING VEGETATION, CONCENTRATED WATER FLOW, ROADS AND HAZARD AREAS.
2. CONSTRUCT ON THE CONTOUR AS LOW, FLAT, ELONGATED MOUNDS.
3. WHERE THERE IS SUFFICIENT AREA, TOPSOIL STOCKPILES SHALL BE LESS THAN 2 METRES IN HEIGHT.
4. WHERE THEY ARE TO BE IN PLACE FOR MORE THAN 10 DAYS, STABILISE FOLLOWING THE APPROVED ESCP OR SWMP TO REDUCE THE C–FACTOR TO LESS THAN 0.10.
5. CONSTRUCT EARTH BANKS (STANDARD DRAWING 5–5) ON THE UPSLOP SIDE TO DIVERT WATER AROUND STOCKPILES AND SEDIMENT FENCES (STANDARD DRAWING 6–8) 1 TO 2 METRES DOWNSLOPE.

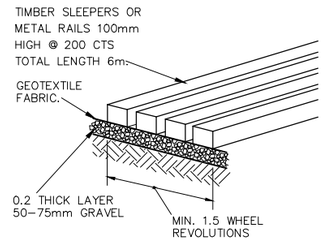

SHAKER RAMP

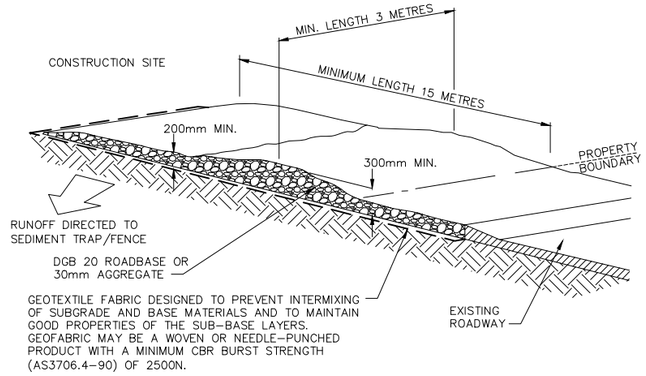

STABILISED SITE ACCESS (SD6–14)

N.T.S.

CONSTRUCTION NOTES:

1. STRIP THE TOPSOIL, LEVEL THE SITE AND COMPACT THE SUBGRADE.
2. COVER THE AREA WITH NEEDLE–PUNCHED GEOTEXTILE.
3. CONSTRUCT A 200mm THICK PAD OVER THE GEOTEXTILE USING ROAD BASE OR 30mm AGGREGATE.
4. ENSURE THE STRUCTURE IS AT LEAST 15 METRES LONG OR TO BUILDING ALIGNMENT AND AT LEAST 3 METRES WIDE.
5. WHERE A SEDIMENT FENCE JOINS ONTO THE STABILISED ACCESS, CONSTRUCT A HUMP IN THE STABILISED ACCESS TO DIVERT WATER TO THE SEDIMENT FENCE.

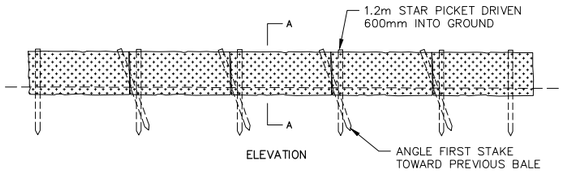

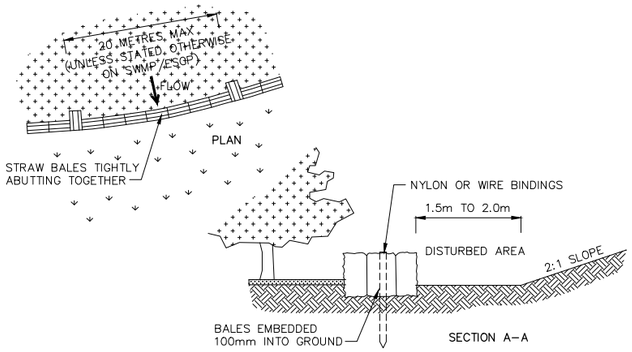

STRAW BALE FILTER (SD6–7)

N.T.S.

CONSTRUCTION NOTES:

1. CONSTRUCT THE STRAW BALE FILTER AS CLOSE AS POSSIBLE TO BEING PARALLEL TO THE CONTOURS OF THE SITE.
2. PLACE BALES LENGTHWISE IN A ROW WITH ENDS TIGHTLY ABUTTING. USE STRAW TO FILL ANY GAPS BETWEEN BALES. STRAWS ARE TO BE PLACED PARALLEL TO GROUND.
3. ENSURE THAT THE MAXIMUM HEIGHT OF THE FILTER IS ONE BALE.
4. EMBED EACH BALE IN THE GROUND 75mm TO 100mm AND ANCHOR WITH TWO 1.2m STAR PICKETS OR STAKES. ANGLE THE FIRST STAR PICKET OR STAKE IN EACH BALE TOWARDS THE PREVIOUSLY LAID BALE. DRIVE THEM 600mm IN THE GROUND AND, IF POSSIBLE, FLUSH WITH THE TOP OF THE BALES. WHERE STAR PICKETS ARE USED AND THEY PROTRUDE ABOVE THE BALES, ENSURE THEY ARE FITTED WITH SAFETY CAPS.
5. WHERE A STRAW BALE FILTER IS CONSTRUCTED DOWNSLOPE FROM A DISTURBED BATTER, ENSURE THE BALES ARE PLACES 1 TO 2 METRES DOWNSLOPE FROM THE TOE.
6. ESTABLISH A MAINTENANCE PROGRAM THAT ENSURES THE INTEGRITY OF THE BALES IS RETAINED – THEY COULD REQUIRE REPLACEMENT EACH TWO TO FOUR MONTHS.

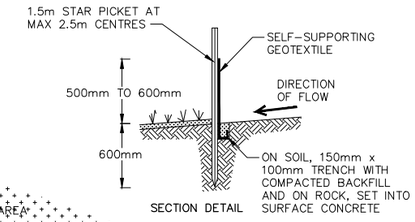

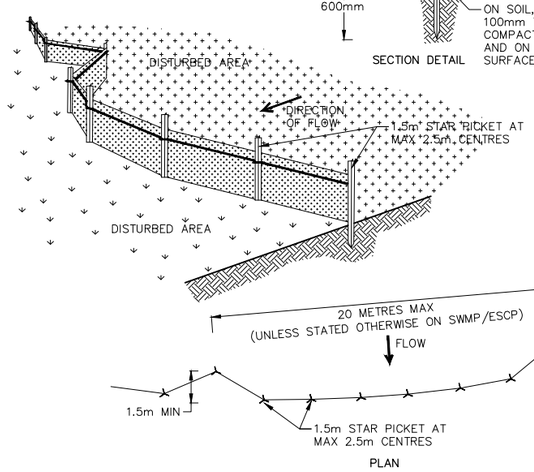

SEDIMENT FENCE (SD6–8)

N.T.S.

CONSTRUCTION NOTES:

1. CONSTRUCT SEDIMENT FENCES AS CLOSE AS POSSIBLE TO BEING PARALLEL TO THE CONTOURS OF THE SITE, BUT WITH SMALL RETURNS AS SHOWN IN THE DRAWING TO LIMIT THE CATCHMENT AREA OF ANY ONE SECTION. THE CATCHMENT AREA SHOULD BE SMALL ENOUGH TO LIMIT WATER FLOW IF CONCENTRATED AT ONE POINT TO 50 LITRES PER SECOND IN THE DESIGN STORM EVENT, USUALLY THE 10–YEAR EVENT.
2. CUT A 150mm DEEP TRENCH ALONG THE UPSLOPE LINE OF THE FENCE FOR THE BOTTOM OF THE FABRIC TO BE ENTRENCHED.
3. DRIVE 1.5m LONG STAR PICKETS INTO GROUND AT 2.5 METRE INTERVALS (MAX) AT DOWNSLOPE EDGE OF THE TRENCH. ENSURE ANY STAR PICKETS ARE FITTED WITH SAFETY CAPS.
4. FIX SELF–SUPPORTING GEOTEXTILE TO THE UPSLOPE SIDE OF THE POSTS ENSURING IT GOES TO THE BASE OF THE TRENCH. FIX THE GEOTEXTILE WITH WIRE TIES OR AS RECOMMENDED BY THE MANUFACTURER. ONLY USE GEOTEXTILE SPECIFICALLY PRODUCED FOR SEDIMENT FENCING. THE USE OF SHADE CLOTH FOR THIS PURPOSE IS NOT SATISFACTORY.
5. JOIN SECTIONS OF FABRIC AT A SUPPORT POST WITH A 150mm OVERLAP.
6. BACKFILL THE TRENCH OVER THE BASE OF THE FABRIC AND COMPACT IT THOROUGHLY OVER THE GEOTEXTILE.

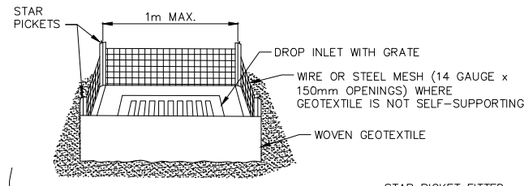

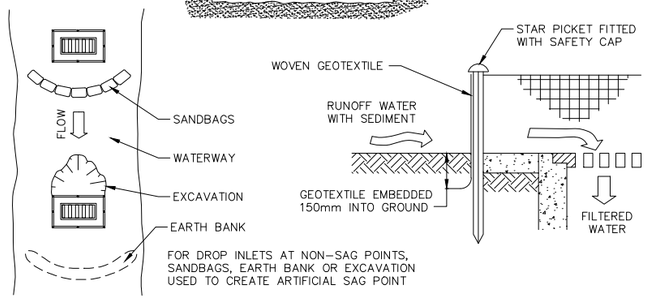

GEOTEXTILE INLET FILTER (SD6–12)

N.T.S.

CONSTRUCTION NOTES:

1. FABRICATE A SEDIMENT BARRIER MADE FROM GEOTEXTILE OR STRAW BALES.
2. REFER STANDARD DRAWINGS 6–7 & 6–8 FOR INSTALLATION PROCEDURES FOR THE STRAW BALES OR GEOFABRIC. REDUCE THE PICKET SPACING TO 1 METRE CENTRES.
3. IN WATERWAYS, ARTIFICIAL SAG POINTS CAN BE CREATED WITH SANDBAGS OR EARTH BANKS AS SHOWN IN THE DRAWING.
4. DO NOT COVER THE INLET WITH GEOTEXTILE UNLESS THE DESIGN IS ADEQUATE TO ALLOW FOR ALL WATERS TO BYPASS IT.

These plans are referred to in certificate no. **16746** approved by:
Eric Hausfeld
Registered Certifier
Registration No: BDC 2416
Categories: Certifier – Subdivision; Certifier – Strata; Certifier – Stormwater; Certifier – Road & Drainage; Certifier – Hydraulic (stormwater)
Land Development Certificates
www.LDC.com.au

DIAL 1100 BEFORE YOU DIG

CONSTRUCTION ISSUE

REV.	DATE	AMENDMENT	DESIGN	DRAWN	CHECKED	APPROVED
1	21.01.22	ISSUED FOR CONSTRUCTION	B.M.	J.J.	B.M.	B.M.

DESIGN FILE S:\300001\DESIGN\12D\STAGE 2 CC\DESIGN FILE.project

SCALES: NOT TO SCALE

ALL DIMENSIONS ARE IN METRES. DO NOT SCALE

adw Johnson
Central Coast
5 Pioneer Avenue,
P.O. Box 3717,
Tuggerah N.S.W. 2259
Phone: (02) 4305 4300
Fax: (02) 4305 4399
email: coast@adwjohnson.com.au
www.adwjohnson.com.au
ABN 62 129 445 398

CLIENT: FRASERS PROPERTY

PROPERTY DESCRIPTION: LOT 100 D.P.1262209 & LOT 1 D.P.859537, EPPING ROAD & LYONPARK ROAD, MACQUARIE PARK, SSDA 8903

SURVEYED: ADW Johnson | DATUM: GDA94 M.G.A. ZONE 56 A.H.D.

PROJECT: PROPOSED SUBDIVISION

PLAN TITLE: EROSION & SEDIMENT CONTROL DETAILS & NOTES

PROJECT No.	DISCIPLINE	NUMBER	REV.
300001(2) –	ENG –	611	1

Plotted By: Ben Myles Plot Date: 21/01/22 2:35:09PM Cad File: S:\300001\DRAWINGS\ENGINEERING\CIVIL\STAGE 2 CC ENG\300001(2)–ENG–611.DWG

100mm AT FULL SIZE

This plan includes coloured information. If you have a black and white copy you do not have all of the information. This note is coloured RED.

300001(2)-ENG-701

100mm AT FULL SIZE

This plan includes coloured information. If you have a black and white copy you do not have all of the information. This note is coloured RED.

These plans are referred to in certificate no. **16746** approved by:

Eric Hausfeld
Registered Certifier

Registration No: BDC 2416
Categories: Certifier – Subdivision
Certifier – Strata
Certifier – Stormwater
Certifier – Road & Drainage
Certifier – Hydraulic (stormwater)

Land Development Certificates
www.LDC.com.au

IDENTIFIED RISK/HAZARD (1)

1. CONTRACTOR IS TO CONFIRM LEVELS AND LOCATION OF EXISTING TRUNK SEWER PRIOR TO CONSTRUCTION

IDENTIFIED RISK/HAZARD (2)

1. CONTRACTOR IS TO CONSIDER STABILITY OF EXISTING RETAINING WALL DURING CONSTRUCTION.

MGA

LEGEND

- PROPOSED LOT BOUNDARY
- EXISTING LOT BOUNDARY
- MAJOR CONTOURS
- MINOR CONTOURS
- MAJOR CONTOURS NATURAL
- MINOR CONTOURS NATURAL
- PROPOSED KERB
- EXISTING KERB
- EXTENTS OF BATTER
- PROPOSED FOOTPATH
- PROPOSED RETAINING WALL
- PROPOSED STORMWATER
- S — PROPOSED SEWER
- ex sw — EXISTING STORMWATER
- ex s — EXISTING SEWER
- PROPOSED SW PIT
- PROPOSED LINTEL
- PROPOSED HEADWALL
- 1\1 PIT LABEL

CONTOUR INTERVAL = 0.2m

GENERAL NOTES:–

1. SETOUT INFORMATION IS TO BE VERIFIED BY THE CONTRACTOR AGAINST THE PLAN VIEW, LONGITUDINAL SECTIONS AND ELECTRONIC 12D DATA BEFORE BEING USED. IF THERE IS A DISCREPANCY THE SUPERINTENDENT IS TO BE NOTIFIED AND DIRECTION TO BE PROVIDED IN WRITING BEFORE PROCEEDING.

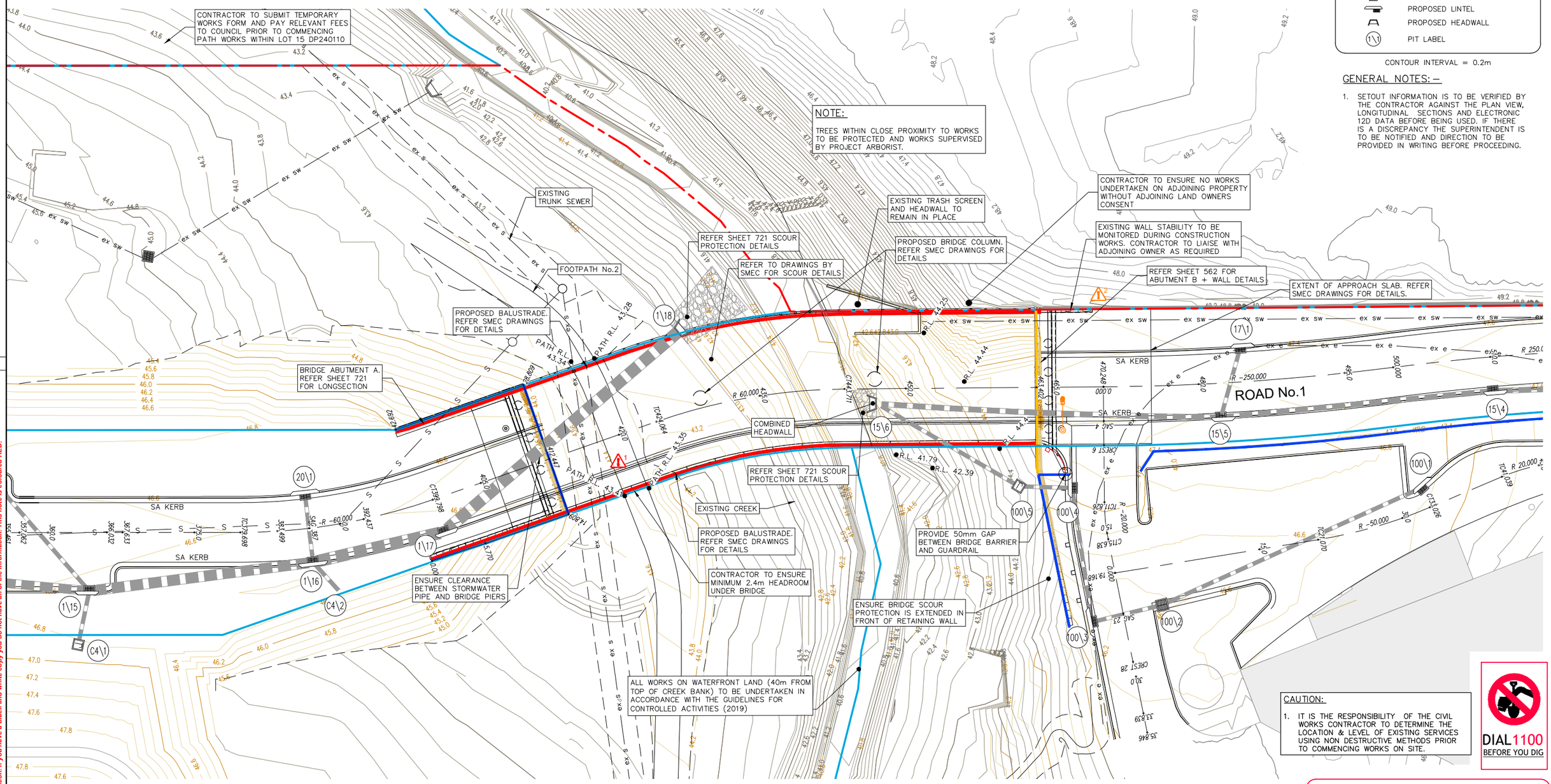

BRIDGE DETAIL PLAN

SCALE 1:200

CAUTION:

1. IT IS THE RESPONSIBILITY OF THE CIVIL WORKS CONTRACTOR TO DETERMINE THE LOCATION & LEVEL OF EXISTING SERVICES USING NON DESTRUCTIVE METHODS PRIOR TO COMMENCING WORKS ON SITE.

DIAL 1100 BEFORE YOU DIG

CONSTRUCTION ISSUE

REV.	DATE	AMENDMENT	DESIGN	DRAWN	CHECKED	APPROVED
1	21.01.22	ISSUED FOR CONSTRUCTION	B.M.	J.J.	B.M.	B.M.

SCALES: A1 1:200 — 0 5.0 10.0m — A3 1:400

DESIGN FILE S:\300001\DESIGN\12D\STAGE 2 CC\DESIGN FILE.project

ALL DIMENSIONS ARE IN METRES. DO NOT SCALE

adw Johnson
Central Coast
5 Pioneer Avenue,
P.O. Box 3717,
Tuggerah N.S.W. 2259
Phone: (02) 4305 4300
Fax: (02) 4305 4399
email: coast@adwjohnson.com.au
www.adwjohnson.com.au
ABN 62 129 445 398

CLIENT: FRASERS PROPERTY

PROPERTY DESCRIPTION: LOT 100 D.P.1262209 & LOT 1 D.P.859537
EPPING ROAD & LYONPARK ROAD,
MACQUARIE PARK
SSDA 8903

SURVEYED: ADW Johnson
DATUM: GDA94 M.G.A. ZONE 56 A.H.D.

PROJECT: PROPOSED SUBDIVISION

PLAN TITLE: BRIDGE DETAIL PLAN

PROJECT No.	DISCIPLINE	NUMBER	REV.
300001(2) –	ENG –	701	1

Plotted By: Ben Myles Plot Date: 21/01/22 2:35:16PM Cad File: S:\300001\DRAWINGS\ENGINEERING\CIVIL\STAGE 2 CC ENG\300001(2)-ENG-701.DWG

300001(2)-ENG-711

These plans are referred to in certificate no. **16746** approved by:

Eric Hausfeld
Registered Certifier

Registration No: BDC 2416
Categories: Certifier – Subdivision
Certifier – Strata
Certifier – Stormwater
Certifier – Road & Drainage
Certifier – Hydraulic (stormwater)

Land Development Certificates
www.LDC.com.au

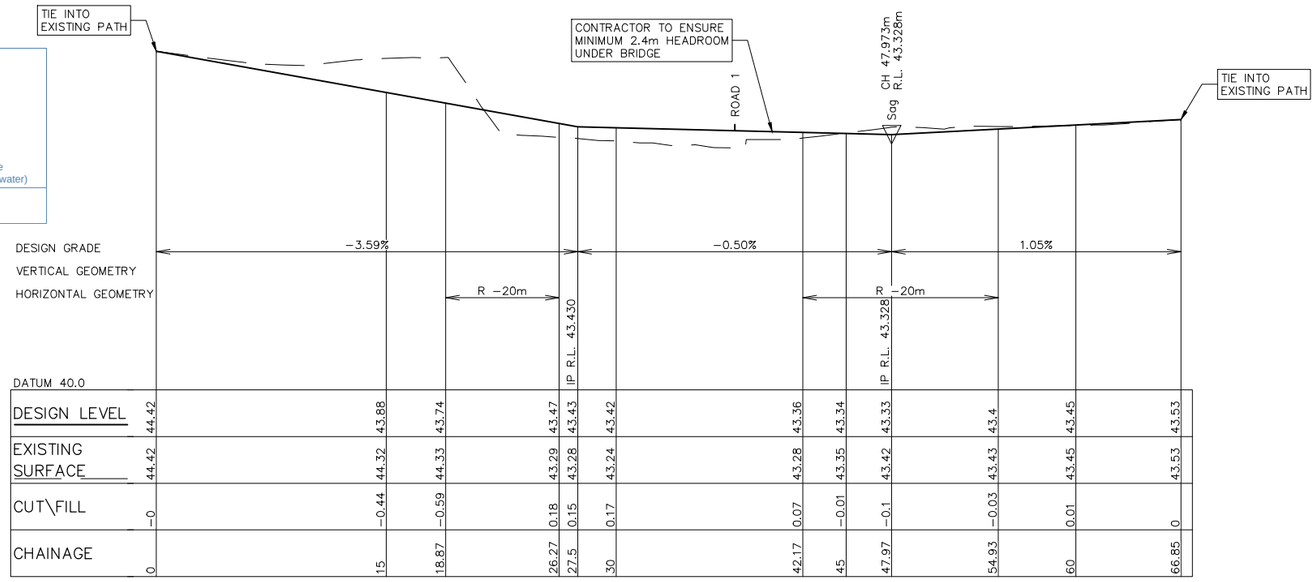

LONGITUDINAL SECTION FOOTPATH No.2

HORIZONTAL SCALE 1:200
VERTICAL SCALE 1:40

FOOTPATH No.2 – SETOUT TABLE							
PT	CHAINAGE	EASTING	NORTHING	BEARING	RAD/SPIRAL	A.LENGTH	DEFL.ANGLE
IP 1	0.000	325750.545	6260302.534	42°52'53.79"			
IP 2	13.137	325759.484	6260312.160				
TC	18.871	325763.260	6260316.477	41°10'55.30"			
IP 3	22.572	325765.725	6260319.294		R = −20.000	7.401	21°12'05.83"
CT	26.272	325767.004	6260322.812	19°58'49.48"			
TC	42.172	325772.437	6260337.755	19°58'49.48"			
IP 4	48.553	325774.694	6260343.963		R = −20.000	12.761	36°33'31.99"
CT	54.934	325772.809	6260350.295	34°25'17.49"			
IP 5	66.851	325769.409	6260361.717	34°25'17.49"			

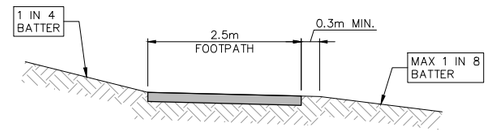

TYPICAL FOOTPATH No.2 SECTION

CH 0.00 TO END
SCALE 1:50

NOTE:

ALL WORKS TO BE UNDERTAKEN IN ACCORDANCE WITH THE BMP AND THE REQUIREMENTS OF THE PROJECT ECOLOGIST.

MGA

LEGEND

- PROPOSED LOT BOUNDARY
- EXISTING LOT BOUNDARY
- MAJOR CONTOURS
- MINOR CONTOURS
- MAJOR CONTOURS NATURAL
- MINOR CONTOURS NATURAL
- PROPOSED KERB
- EXISTING KERB
- EXTENTS OF BATTER
- EXISTING FOOTPATH
- PROPOSED RETAINING WALL
- PROPOSED STORMWATER
- ex sw EXISTING STORMWATER
- PROPOSED SW PIT
- PROPOSED LINTEL
- PROPOSED HEADWALL
- 1\1 PIT LABEL
- TREES TO BE RETAINED
- TREES TO BE REMOVED

CONTOUR INTERVAL = 0.2m

GENERAL NOTES:–

1. SETOUT INFORMATION IS TO BE VERIFIED BY THE CONTRACTOR AGAINST THE PLAN VIEW, LONGITUDINAL SECTIONS AND ELECTRONIC 12D DATA BEFORE BEING USED. IF THERE IS A DISCREPANCY THE SUPERINTENDENT IS TO BE NOTIFIED AND DIRECTION TO BE PROVIDED IN WRITING BEFORE PROCEEDING.

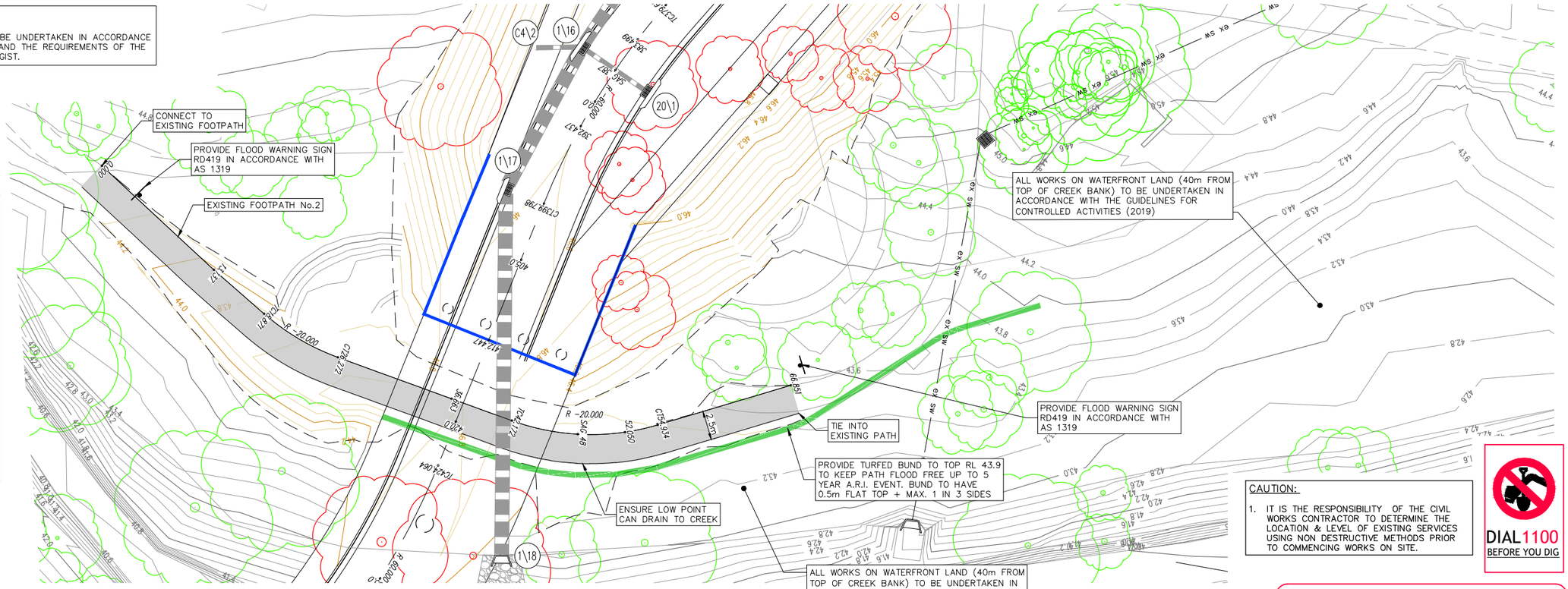

FOOTPATH No.2 DETAIL PLAN

SCALE 1:200

CAUTION:

1. IT IS THE RESPONSIBILITY OF THE CIVIL WORKS CONTRACTOR TO DETERMINE THE LOCATION & LEVEL OF EXISTING SERVICES USING NON DESTRUCTIVE METHODS PRIOR TO COMMENCING WORKS ON SITE.

DIAL 1100 BEFORE YOU DIG

CONSTRUCTION ISSUE

REV.	DATE	AMENDMENT	DESIGN	DRAWN	CHECKED	APPROVED
1	21.01.22	ISSUED FOR CONSTRUCTION	B.M.	J.J.	B.M.	B.M.

SCALES: A1 1:200 — 0 5.0 10.0m — A3 1:400

DESIGN FILE S:\300001\DESIGN\12D\STAGE 2 CC\DESIGN FILE.project

ALL DIMENSIONS ARE IN METRES. DO NOT SCALE

adw Johnson
Central Coast
5 Pioneer Avenue,
P.O. Box 3717,
Tuggerah N.S.W. 2259
Phone: (02) 4305 4300
Fax: (02) 4305 4399
email: coast@adwjohnson.com.au
www.adwjohnson.com.au
ABN 62 129 445 398

CLIENT: FRASERS PROPERTY

PROPERTY DESCRIPTION: LOT 100 D.P.1262209 & LOT 1 D.P.859537
EPPING ROAD & LYONPARK ROAD,
MACQUARIE PARK
SSDA 8903

SURVEYED: ADW Johnson
DATUM: GDA94 M.G.A. ZONE 56 A.H.D.

PROJECT: PROPOSED SUBDIVISION

PLAN TITLE: FOOTPATH No.2 PLAN & LONGITUDINAL SECTION

PROJECT No.	DISCIPLINE	NUMBER	REV.
300001(2) –	ENG –	711	1

Plotted By: Ben Myles Plot Date: 21/01/22 2:35:23PM Cad File: S:\300001\DRAWINGS\ENGINEERING\CIVIL\STAGE 2 CC ENG\300001(2)-ENG-711.DWG

100mm AT FULL SIZE

This plan includes coloured information. If you have a black and white copy you do not have all of the information. This note is coloured RED.

300001(2)-ENG-721

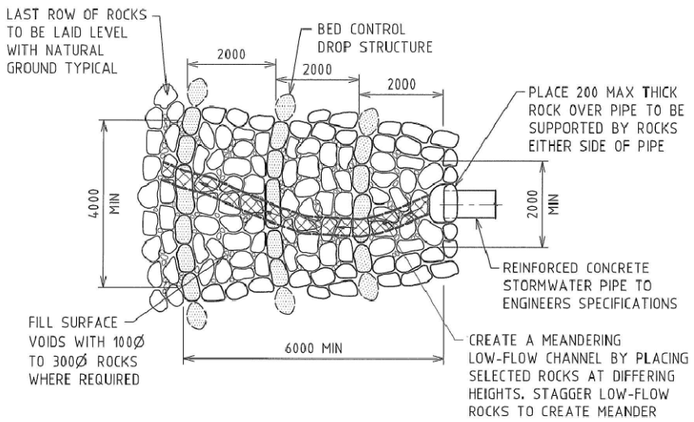

ROCK PITCHED HEADWALL AND ENERGY DISSIPATOR PLAN

N.T.S.

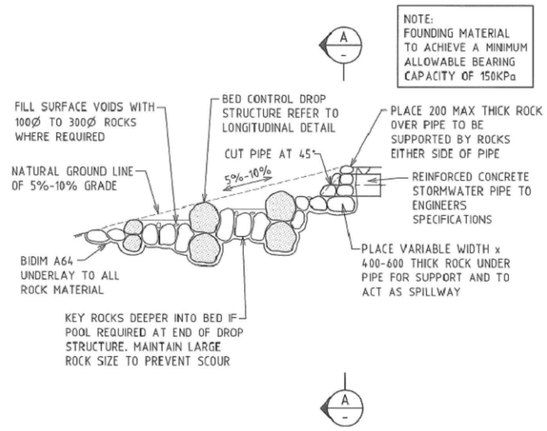

LONGITUDINAL SECTION – ROCK PITCHED HEADWALL AND ENERGY DISSIPATOR

N.T.S.

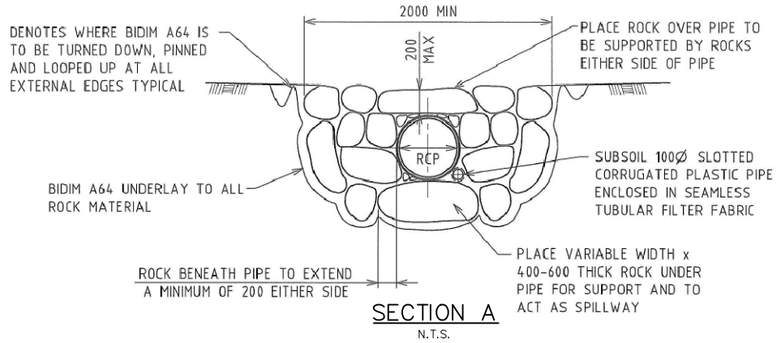

SECTION A

N.T.S.

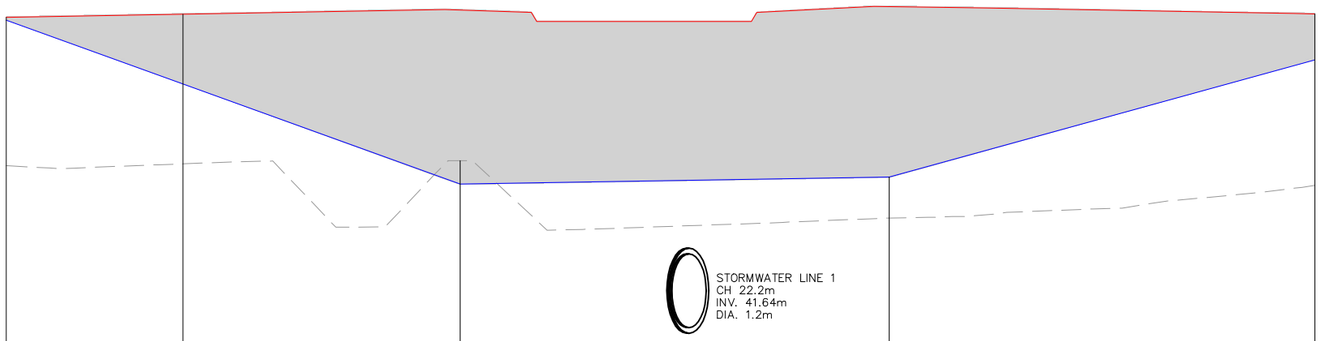

DESIGN GRADE

−18.07%	0.84%	13.75%	

DATUM 38.0

TOP OF WALL	46.69	46.75				46.75
WALL HEIGHT	0.05	1.14				0.75
EXISTING	44.28	44.3	44.36	43.42		43.96
TOE OF WALL	46.65	45.61	43.97	44.09		46
CHAINAGE	0	5.77	14.81	28.81		42.69

LONGITUDINAL SECTION – BRIDGE ABUTMENT A

HORIZONTAL SCALE 1:100
VERTICAL SCALE 1:50

NOTE:

REFER TO SMEC DESIGN FOR DETAILS.

These plans are referred to in certificate no. **16746** approved by:

Eric Hausfeld
Registered Certifier

Registration No: BDC 2416

Categories: Certifier – Subdivision
Certifier – Strata
Certifier – Stormwater
Certifier – Road & Drainage
Certifier – Hydraulic (stormwater)

Land Development Certificates
www.LDC.com.au

NOTE:

LENGTH OF OUTLET STRUCTURES TO BE TERMINATED AT TOP OF BANK WHERE REQUIRED. FINAL LOCATIONS TO BE COORDINATED ON SITE.

DIAL 1100 BEFORE YOU DIG

CONSTRUCTION ISSUE

REV.	DATE	AMENDMENT	DESIGN	DRAWN	CHECKED	APPROVED
1	21.01.22	ISSUED FOR CONSTRUCTION	B.M.	J.J.	B.M.	B.M.

SCALES: A1 1:100 (0, 2.5, 5.0m) A3 1:200; A1 1:50 (0, 1.25, 2.5 m) A3 1:100

ALL DIMENSIONS ARE IN METRES. DO NOT SCALE

DESIGN FILE S:\300001\DESIGN\12D\STAGE 2 CC\DESIGN FILE.project

adw Johnson
Central Coast
5 Pioneer Avenue,
P.O. Box 3717,
Tuggerah N.S.W. 2259
Phone: (02) 4305 4300
Fax: (02) 4305 4399
email: coast@adwjohnson.com.au
www.adwjohnson.com.au
ABN 62 129 445 398

CLIENT: FRASERS PROPERTY

PROPERTY DESCRIPTION: LOT 100 D.P.1262209 & LOT 1 D.P.859537
EPPING ROAD & LYONPARK ROAD,
MACQUARIE PARK
SSDA 8903

SURVEYED: ADW Johnson
DATUM: GDA94 M.G.A. ZONE 56 A.H.D.

PROJECT: PROPOSED SUBDIVISION

PLAN TITLE: BRIDGE ABUTMENT
LONGITUDINAL SECTION
& HEADWALL OUTLET DETAILS

PROJECT No.	DISCIPLINE	NUMBER	REV.
300001(2) –	ENG –	721	1

Plotted By: Ben Myles Plot Date: 21/01/22 2:35:26PM Cad File: S:\300001\DRAWINGS\ENGINEERING\CIVIL\STAGE 2 CC ENG\300001(2)-ENG-721.DWG

100mm AT FULL SIZE

This plan includes coloured information. If you have a black and white copy you do not have all of the information. This note is coloured RED.

300001(2)-ENG-722

ALL DIMENSIONS ARE IN MILLIMETRES UNLESS NOTED OTHERWISE

ROCK CONSTRUCTION NOTES

1. SIZE B ROCKS ARE TO BE USED FOR ALL CRITICAL POINTS IN STRUCTURE ie. BED CONTROLS AND STRUCTURE OUTLETS.
2. 100 TO 300mm ROCKS ARE TO BE HAND PACKED INTO VOIDS WITHIN ROCK STRUCTURE BETWEEN SIZE A AND B ROCKS.
3. ROCK PLACED BETWEEN OUTLET OF PIPE IS TO EXTEND A MINIMUM OF 200mm EITHER SIDE OF PIPE.
4. ROCK SELECTION AND PLACEMENT FOR PIPE HEADWALL TO ENSURE NO LOAD BEARING WEIGHT IS PLACED ON PIPE.
5. SIDE SUPPORT ROCKS AT HEADWALL FOR DIAMETERS UP TO 525mm ARE TO BE THE SAME OR SIMILAR TO PIPE DIAMETER. FOR PIPE DIAMETERS ABOVE 525mm TWO SIDE SUPPORT ROCKS CAN BE USED

ROCK SIZING		
PIPE Ø (mm)	0-5%	>5%
375 to 600	A	B
> 600	B	B

A - 500Ø TO 700Ø SANDSTONE
B - 700Ø TO 1200Ø SANDSTONE

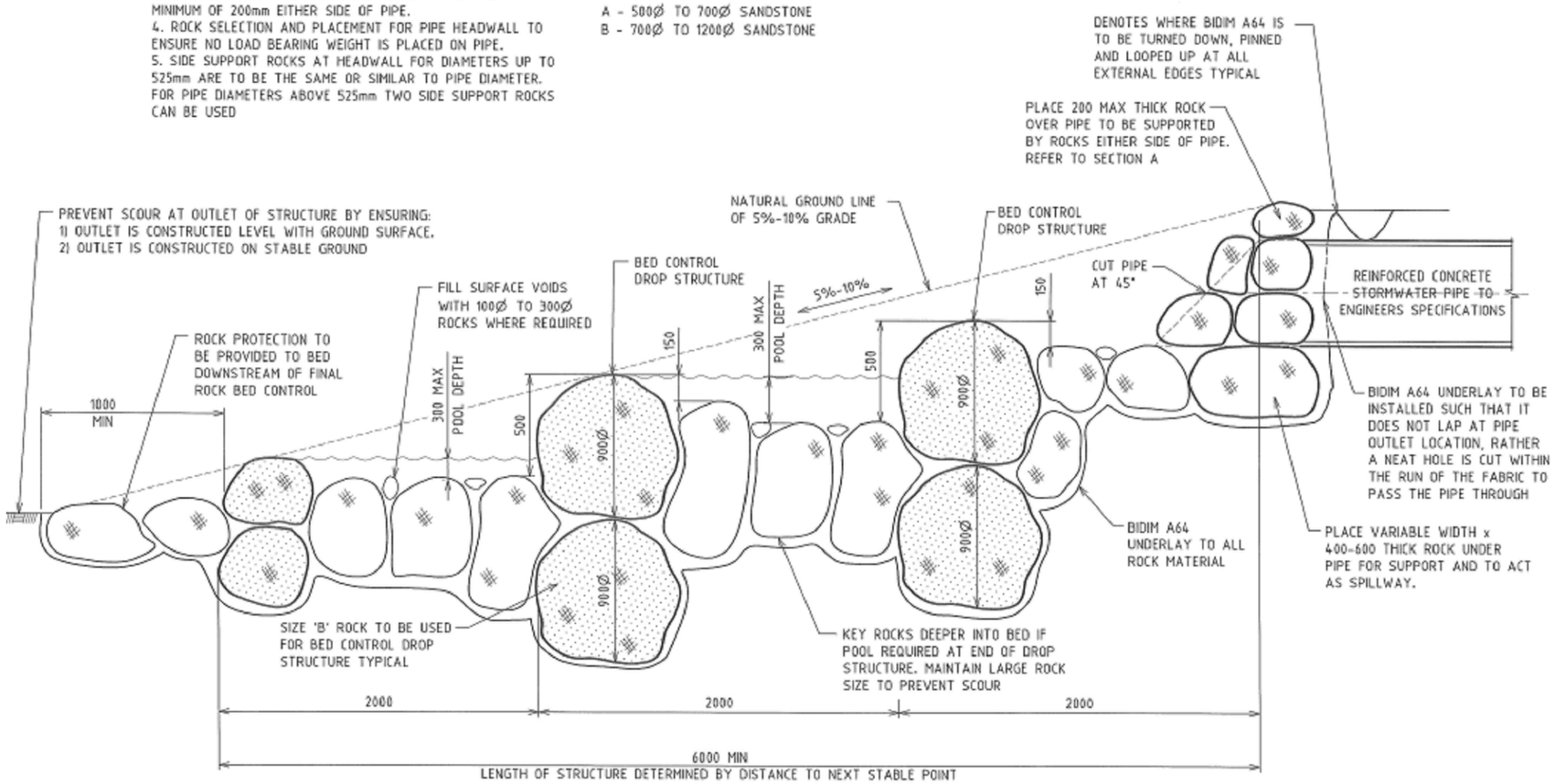

LONGITUDINAL SECTION – ROCK PITCHED HEADWALL AND ENERGY DISSIPATOR

N.T.S.

NOTE:

LENGTH OF OUTLET STRUCTURES TO BE TERMINATED AT TOP OF BANK WHERE REQUIRED. FINAL LOCATIONS TO BE COORDINATED ON SITE.

These plans are referred to in certificate no. **16746** approved by:
Eric Hausfeld
Registered Certifier
Registration No: BDC 2416
Categories: Certifier – Subdivision, Certifier – Strata, Certifier – Stormwater, Certifier – Road & Drainage, Certifier – Hydraulic (stormwater)
Land Development Certificates
www.LDC.com.au

DIAL1100 BEFORE YOU DIG

CONSTRUCTION ISSUE

REV.	DATE	AMENDMENT	DESIGN	DRAWN	CHECKED	APPROVED
1	21.01.22	ISSUED FOR CONSTRUCTION	B.M.	J.J.	B.M.	B.M.

SCALES: NOT TO SCALE

DESIGN FILE S:\300001\DESIGN\12D\STAGE 2 CC\DESIGN FILE.project

ALL DIMENSIONS ARE IN METRES. DO NOT SCALE

adw Johnson
Central Coast
5 Pioneer Avenue,
P.O. Box 3717,
Tuggerah N.S.W. 2259
Phone: (02) 4305 4300
Fax: (02) 4305 4399
email: coast@adwjohnson.com.au
www.adwjohnson.com.au
ABN 62 129 445 398

CLIENT: FRASERS PROPERTY

PROPERTY DESCRIPTION: LOT 100 D.P.1262209 & LOT 1 D.P.859537
EPPING ROAD & LYONPARK ROAD,
MACQUARIE PARK
SSDA 8903

SURVEYED: ADW Johnson
DATUM: GDA94 M.G.A. ZONE 56 A.H.D.

PROJECT: PROPOSED SUBDIVISION
PLAN TITLE: HEADWALL OUTLET DETAILS

PROJECT No.	DISCIPLINE	NUMBER	REV.
300001(2) –	ENG –	722	1

Plotted By: Ben Myles Plot Date: 21/01/22 2:35:29PM Cad File: S:\300001\DRAWINGS\ENGINEERING\CIVIL\STAGE 2 CC ENG\300001(2)-ENG-722.DWG

100mm AT FULL SIZE

This plan includes coloured information. If you have a black and white copy you do not have all of the information. This note is coloured RED.

300001(2)-ENG-751

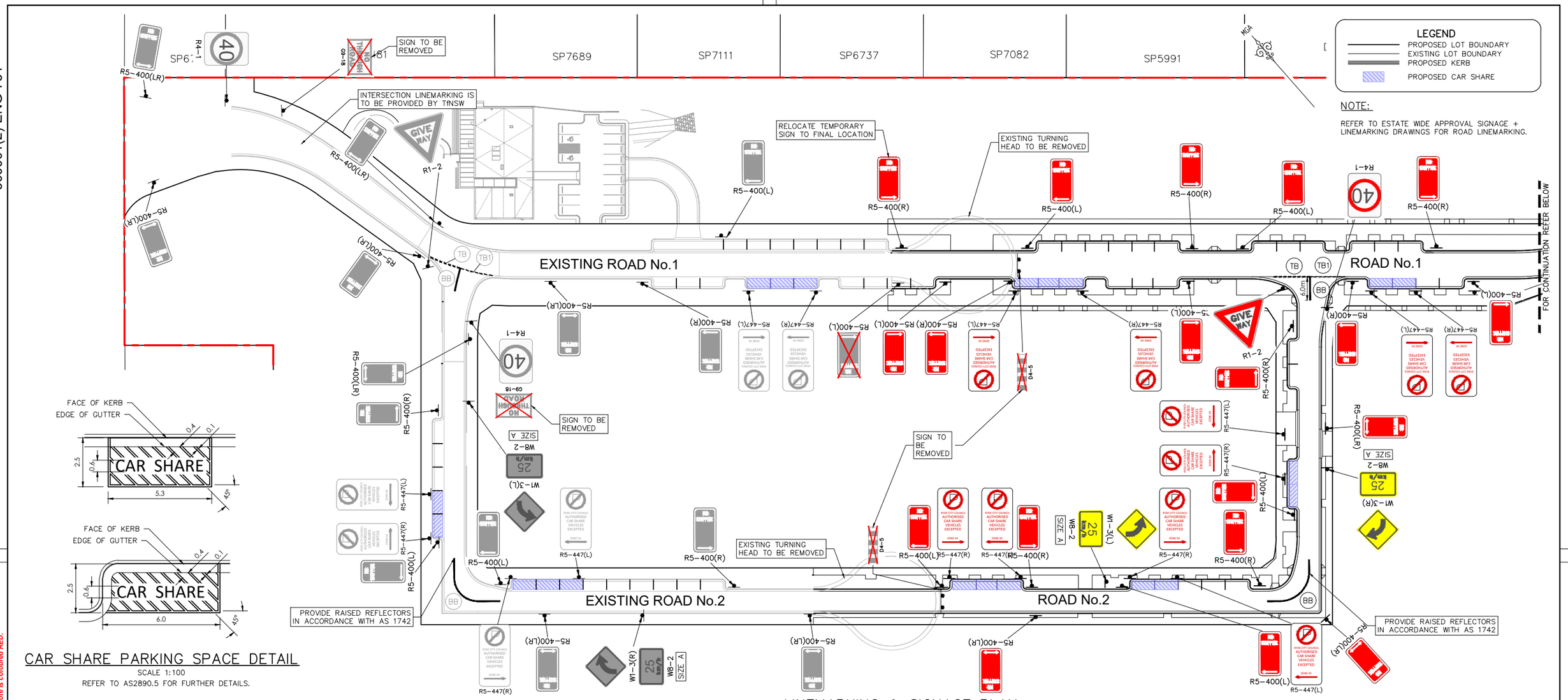

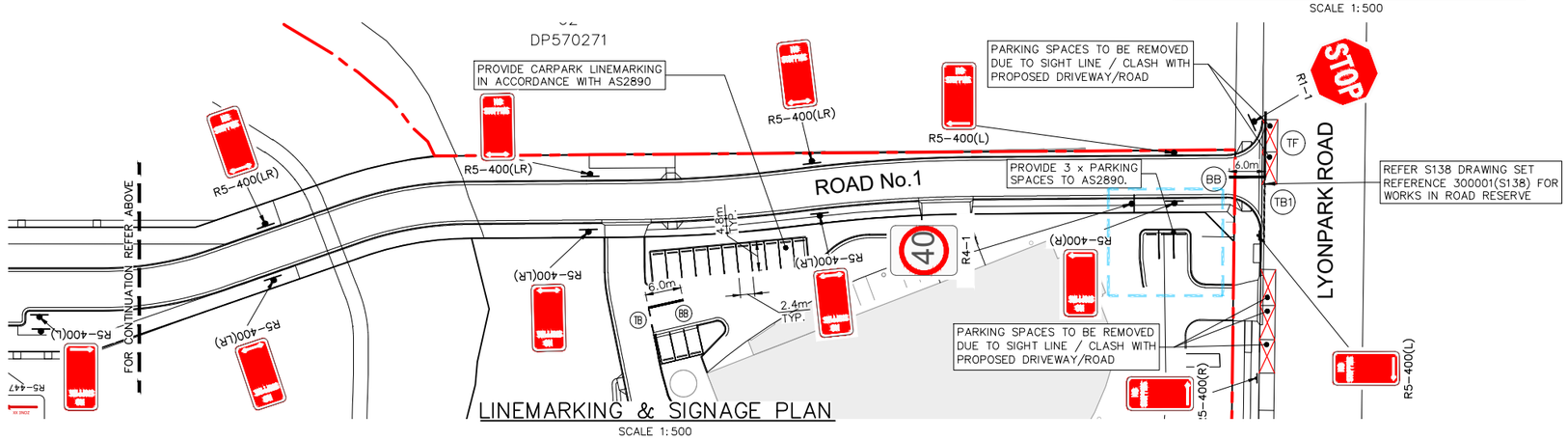

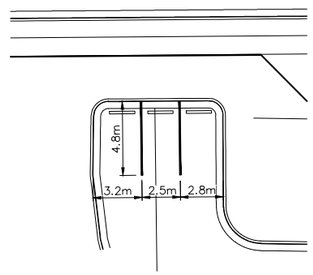

NOTES: –

1. CAR SHARE ZONE TO BE CONFIRMED BY LTC.
2. INSTALL LINEMARKING AND SIGNAGE IN ACCORDANCE WITH AS1742 AND RMS DELINEATION GUIDELINES.

DIAL 1100 BEFORE YOU DIG

CONSTRUCTION ISSUE

REV.	DATE	AMENDMENT	DESIGN	DRAWN	CHECKED	APPROVED
1	21.01.22	ISSUED FOR CONSTRUCTION	B.M.	J.J.	B.M.	B.M.

SCALES: A1 1:200 / A3 1:400 — 0, 5.0, 10.0m

ALL DIMENSIONS ARE IN METRES. DO NOT SCALE

DESIGN FILE S:\300001\DESIGN\12D\STAGE 2 CC\DESIGN FILE.project

adw Johnson
Central Coast
5 Pioneer Avenue,
P.O. Box 3717,
Tuggerah N.S.W. 2259
Phone: (02) 4305 4300
Fax: (02) 4305 4399
email: coast@adwjohnson.com.au
www.adwjohnson.com.au
ABN 62 129 445 398

CLIENT: FRASERS PROPERTY

PROPERTY DESCRIPTION: LOT 100 D.P.1262209 & LOT 1 D.P.859537 EPPING ROAD & LYONPARK ROAD, MACQUARIE PARK SSDA 8903

SURVEYED: ADW Johnson — DATUM: GDA94 M.G.A. ZONE 56 A.H.D.

PROJECT: PROPOSED SUBDIVISION

PLAN TITLE: LINEMARKING & SIGNAGE PLAN

PROJECT No.	DISCIPLINE	NUMBER	REV.
300001(2) –	ENG –	751	1

Plotted By: Ben Myles Plot Date: 21/01/22 2:35:34PM Cad File: S:\300001\DRAWINGS\ENGINEERING\CIVIL\STAGE 2 CC ENG\300001(2)-ENG-751.DWG

100mm AT FULL SIZE

This plan includes coloured information. If you have a black and white copy you do not have all of the information. This note is coloured RED.

300001(2)-ENG-801

GENERAL NOTES: –

1. ALL TRESS WITHIN WORKS FOOTPRINT TO BE REMOVED IN ACCORDANCE WITH APPROVED ARBORIST REPORT.
2. ALL TREES OUTSIDE OF WORKS ZONE TO BE PROTECTED.
3. NO TREES TO BE REMOVED UNTIL AUTHORISED BY THE PROJECT ECOLOGIST.
4. TREE REMOVAL AND RETENTION/PROTECTION WORKS TO BE UNDERTAKEN IN ACCORDANCE WITH THE ARBORICULTURAL IMPACT ASSESSMENT 19NEW–13891 DATED FEBRUARY 2020 AND UNDER SUPERVISION OF THE PROJECT ECOLOGIST.

MGA

LEGEND

- SITE BOUNDARY
- LIMIT OF WORKS BOUNDARY
- PROPOSED LOT BOUNDARY
- EXISTING LOT BOUNDARY
- MAJOR CONTOURS
- MINOR CONTOURS
- PROPOSED KERB
- EXISTING KERB
- EXTENTS OF BATTER
- SW — PROPOSED STORMWATER
- ex sw — EXISTING STORMWATER
- PROPOSED SW PIT
- PROPOSED LINTEL
- PROPOSED HEADWALL
- TREES TO BE RETAINED
- TREES TO BE REMOVED

CONTOUR INTERVAL = 0.5m

NOTE:

ALL WORKS TO BE UNDERTAKEN IN ACCORDANCE WITH THE BMP AND THE REQUIREMENTS OF THE PROJECT ECOLOGIST.

These plans are referred to in certificate no. **16746** approved by:
Eric Hausfeld
Registered Certifier
Registration No: BDC 2416
Categories: Certifier – Subdivision; Certifier – Strata; Certifier – Stormwater; Certifier – Road & Drainage; Certifier – Hydraulic (stormwater)
Land Development Certificates
www.LDC.com.au

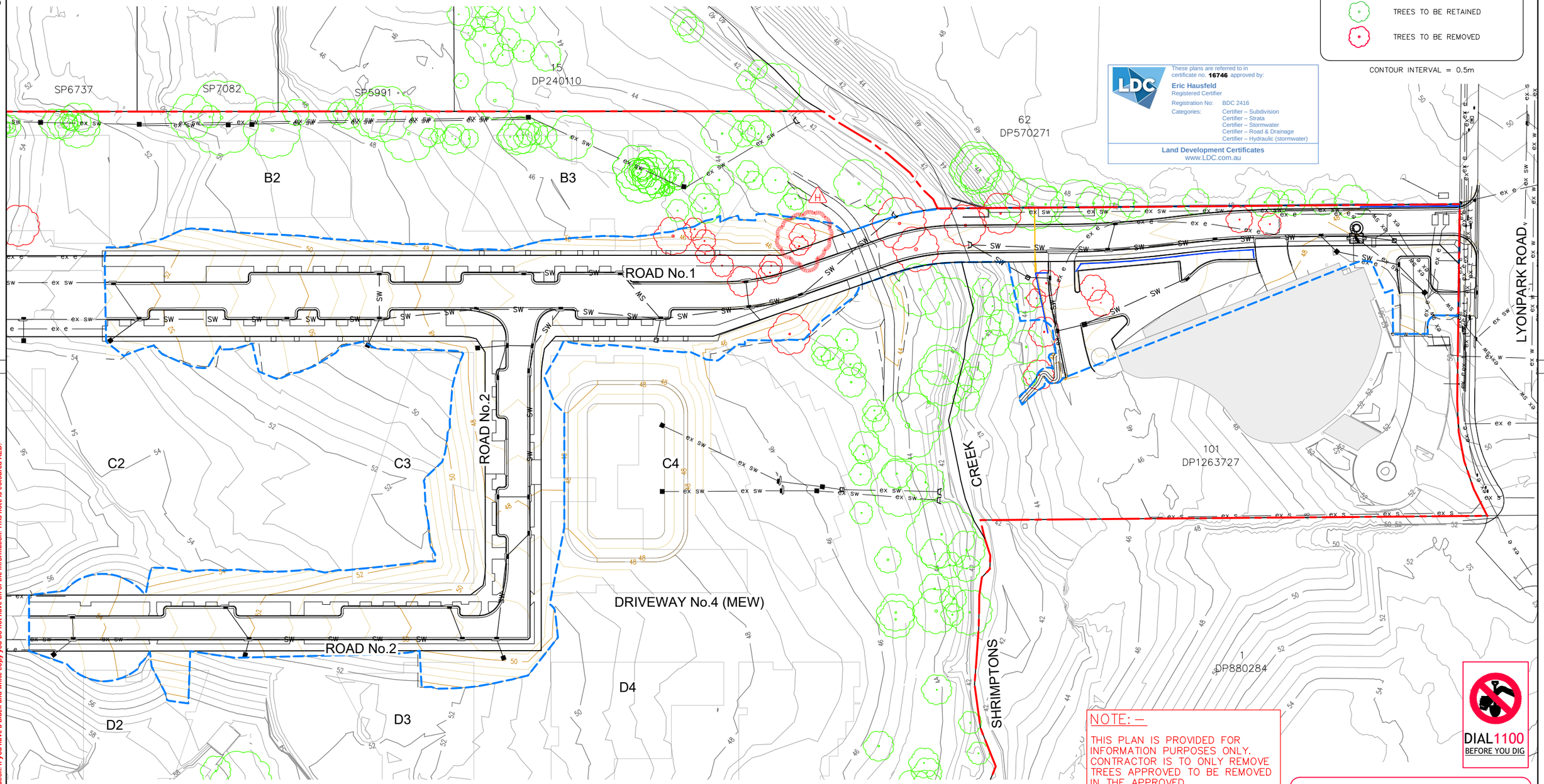

NOTE: –

THIS PLAN IS PROVIDED FOR INFORMATION PURPOSES ONLY. CONTRACTOR IS TO ONLY REMOVE TREES APPROVED TO BE REMOVED IN THE APPROVED ARBORICULTURAL IMPACT ASSESSMENT.

DIAL 1100 BEFORE YOU DIG

TREE RETENTION PLAN

SCALE 1:500

CONSTRUCTION ISSUE

REV.	DATE	AMENDMENT	DESIGN	DRAWN	CHECKED	APPROVED
1	21.01.22	ISSUED FOR CONSTRUCTION	B.M.	J.J.	B.M.	B.M.

SCALES: A1 1:500 — 0 12.5 25.0m — A3 1:1000

DESIGN FILE S:\300001\DESIGN\12D\STAGE 2 CC\DESIGN FILE.project

ALL DIMENSIONS ARE IN METRES. DO NOT SCALE

adw Johnson
Central Coast
5 Pioneer Avenue,
P.O. Box 3717,
Tuggerah N.S.W. 2259
Phone: (02) 4305 4300
Fax: (02) 4305 4399
email: coast@adwjohnson.com.au
www.adwjohnson.com.au
ABN 62 129 445 398

CLIENT: FRASERS PROPERTY

PROPERTY DESCRIPTION: LOT 100 D.P.1262209 & LOT 1 D.P.859537, EPPING ROAD & LYONPARK ROAD, MACQUARIE PARK, SSDA 8903

SURVEYED: ADW Johnson

DATUM: GDA94 M.G.A. ZONE 56 A.H.D.

PROJECT: PROPOSED SUBDIVISION

PLAN TITLE: TREE RETENTION PLAN

PROJECT No.	DISCIPLINE	NUMBER	REV.
300001(2) –	ENG –	801	1

Plotted By: Ben Myles Plot Date: 21/01/22 2:35:40PM Cad File: S:\300001\DRAWINGS\ENGINEERING\CIVIL\STAGE 2 CC ENG\300001(2)–ENG–801.DWG

100mm AT FULL SIZE

This plan includes coloured information. If you have a black and white copy you do not have all of the information. This note is coloured RED.

300001(2)-ENG-901

NOTE: –

WATERMAIN REQUIRED TO BE LOCALLY DIVERTED AROUND STORMWATER PITS AND STREET LIGHT FOOTINGS. ENSURE ADEQUATE CLEARANCE BETWEEN WATERMAIN AND STRUCTURES. CLEARANCES TO ALLOW FOR WORKING SPACE FOR BORING OF STREET LIGHT FOOTINGS.

NOTE: –

CONTRACTOR TO UNDERTAKE CLASH CHECK OF ALL SERVICES PRIOR TO COMMENCEMENT.

NOTE: –

TEMPORARY WORKS NOT SHOWN. REFER TENDER SET OF DRAWINGS PREPARED BY ADWJ FOR FURTHER DETAILS.

NOTE: –

CONTRACTOR TO CONFIRM SERVICES AGAINST LANDSCAPE DRAWINGS PRIOR TO COMMENCEMENT

NOTE: –

ALL SERVICES SHOWN INDICATIVELY ONLY. REFER TO RELEVANT DESIGNS FOR SETOUT INFORMATION.

GENERAL NOTES: –

1. SERVICES SHOWN FOR INFORMATION ONLY. ALL SERVICES TO BE CONSTRUCTED IN ACCORDANCE WITH APPROVED CONSTRUCTION DOCUMENTATION, RYDE CITY COUNCIL STANDARDS AND THE RELEVANT SERVICE AUTHORITY STANDARDS.
2. CONTRACTOR TO LOCALLY FILL AROUND ALL SERVICE FITTINGS IF LANDSCAPE WORKS NOT CONSTRUCTED.

MGA

LEGEND

- SITE BOUNDARY
- LIMIT OF WORKS BOUNDARY
- PROPOSED LOT BOUNDARY
- EXISTING LOT BOUNDARY
- PROPOSED KERB
- SW — PROPOSED STORMWATER
- S — PROPOSED SEWER
- W — PROPOSED WATER
- PROPOSED PVC CONDUIT
- NBN — PROPOSED NBN
- E — PROPOSED ELECTRICITY
- HV — PROPOSED HIGH VOLTAGE
- SL — PROPOSED STREET LIGHT CABLING
- PROPOSED STREET LIGHT
- PROPOSED SW PIT
- PROPOSED LINTEL
- PROPOSED HEADWALL

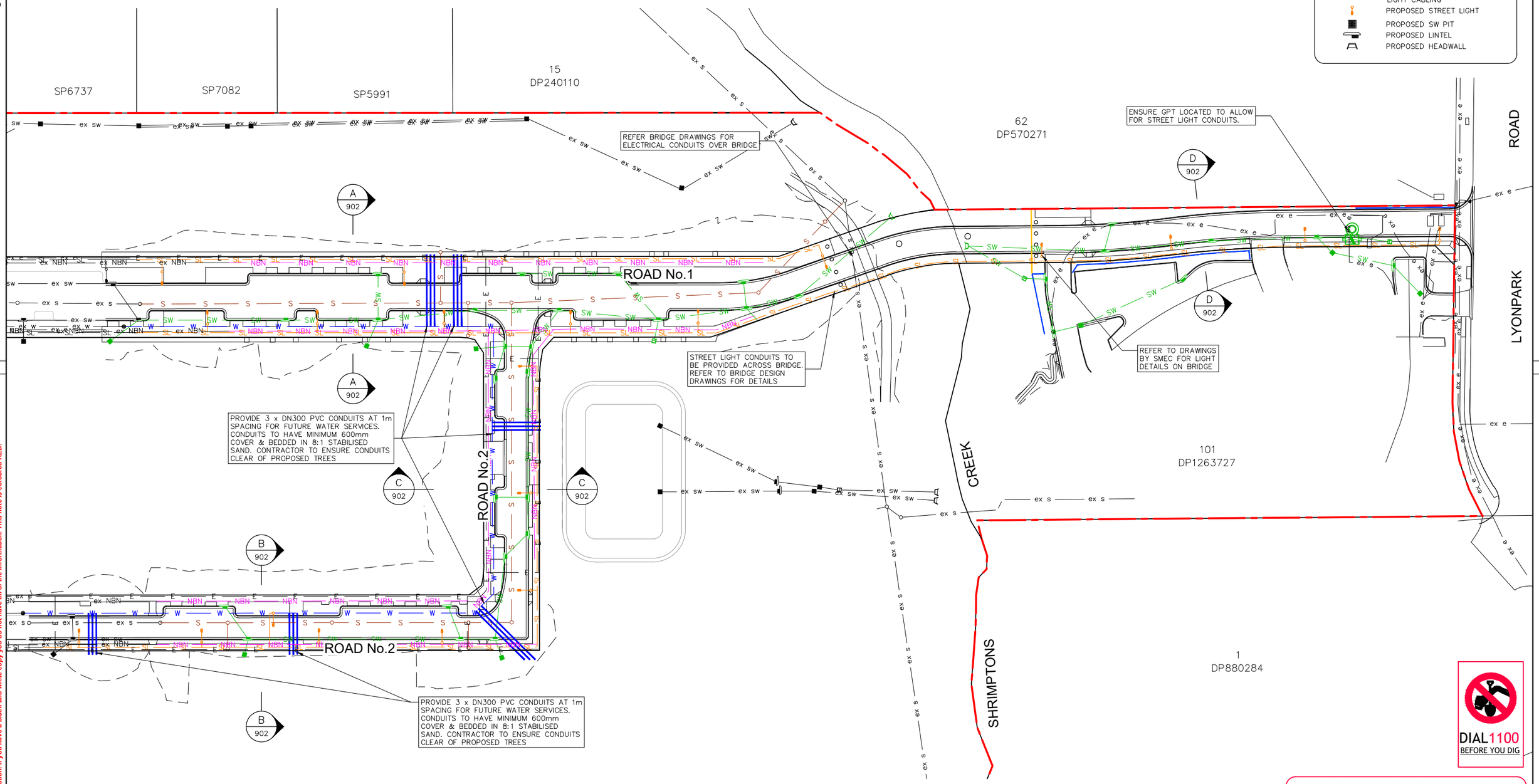

COMBINED SERVICES PLAN

SCALE 1:500

CONSTRUCTION ISSUE

REV.	DATE	AMENDMENT	DESIGN	DRAWN	CHECKED	APPROVED
1	21.01.22	ISSUED FOR CONSTRUCTION	B.M.	J.J.	B.M.	B.M.

SCALES: A1 1:500 — 0 12.5 25.0m — A3 1:1000

DESIGN FILE S:\300001\DESIGN\12D\STAGE 2 CC\DESIGN FILE.project

ALL DIMENSIONS ARE IN METRES. DO NOT SCALE

adw Johnson

Central Coast
5 Pioneer Avenue,
P.O. Box 3717,
Tuggerah N.S.W. 2259
Phone: (02) 4305 4300
Fax: (02) 4305 4399
email: coast@adwjohnson.com.au
www.adwjohnson.com.au
ABN 62 129 445 398

CLIENT: FRASERS PROPERTY

PROPERTY DESCRIPTION: LOT 100 D.P.1262209 & LOT 1 D.P.859537 EPPING ROAD & LYONPARK ROAD, MACQUARIE PARK SSDA 8903

SURVEYED: ADW Johnson

DATUM: GDA94 M.G.A. ZONE 56 A.H.D.

PROJECT: PROPOSED SUBDIVISION

PLAN TITLE: COMBINED SERVICES PLAN

PROJECT No.	DISCIPLINE	NUMBER	REV.
300001(2) –	ENG –	901	1

Plotted By: Ben Myles Plot Date: 21/01/22 2:35:45PM Cad File: S:\300001\DRAWINGS\ENGINEERING\CIVIL\STAGE 2 CC ENG\300001(2)-ENG-901.DWG

100mm AT FULL SIZE

This plan includes coloured information. If you have a black and white copy you do not have all of the information. This note is coloured RED.

300001(2)-ENG-902

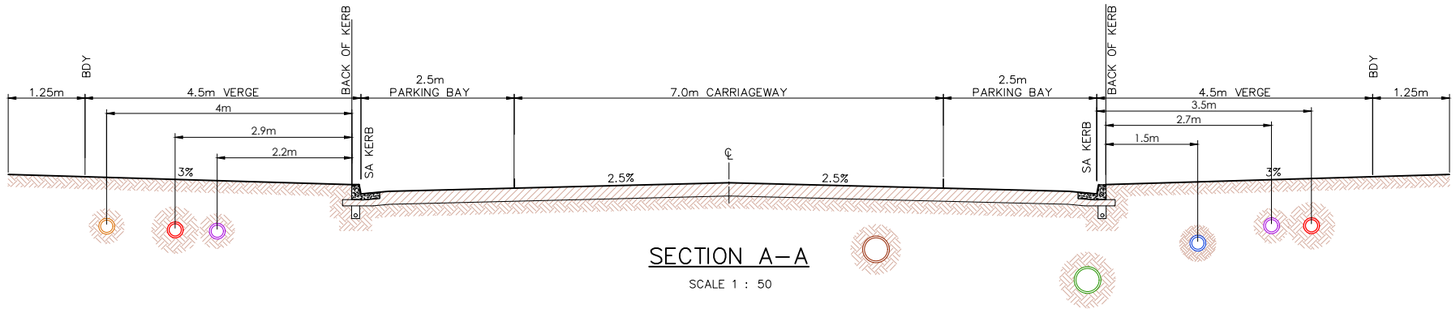

SECTION A–A

SCALE 1 : 50

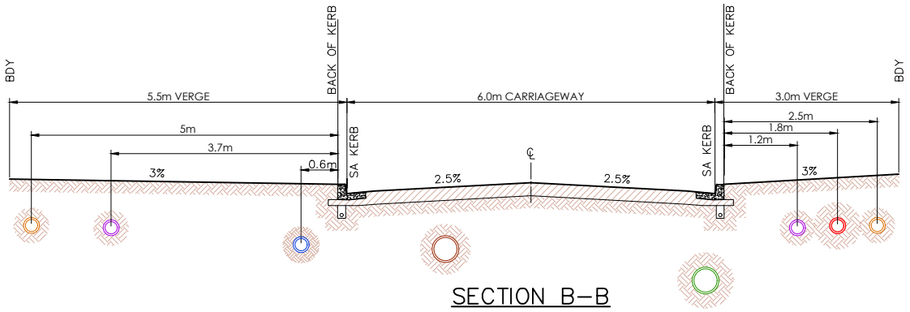

SECTION B–B

SCALE 1 : 50

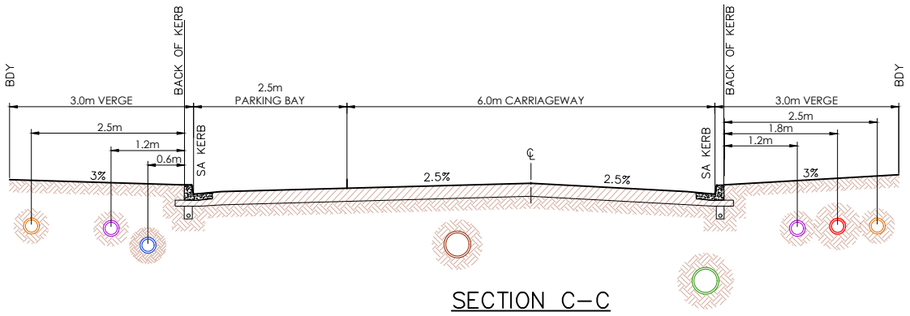

SECTION C–C

SCALE 1 : 50

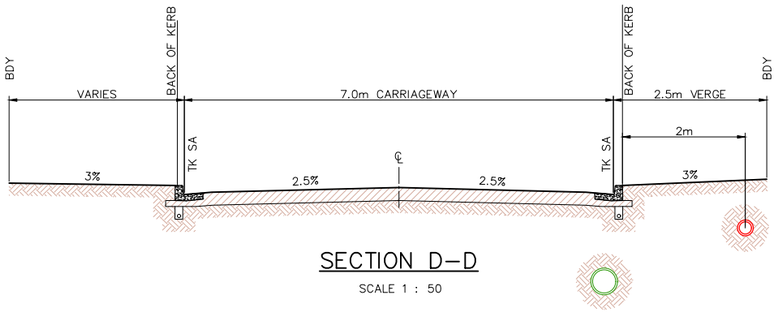

SECTION D–D

SCALE 1 : 50

LEGEND

- PROPOSED STORMWATER
- PROPOSED WATER
- PROPOSED SEWER
- PROPOSED NBN
- PROPOSED ELECTRICAL
- EXISTING HIGH VOLTAGE
- PROPOSED STREET LIGHTING

GENERAL NOTES: –

1. SERVICES SHOWN FOR INFORMATION ONLY. ALL SERVICES TO BE CONSTRUCTED IN ACCORDANCE WITH APPROVED CONSTRUCTION DOCUMENTATION, RYDE CITY COUNCIL STANDARDS AND THE RELEVANT SERVICE AUTHORITY STANDARDS.

NOTE: –

WATERMAIN REQUIRED TO BE LOCALLY DIVERTED AROUND STORMWATER PITS AND STREET LIGHT FOOTINGS. ENSURE ADEQUATE CLEARANCE BETWEEN WATERMAIN AND STRUCTURES. CLEARANCES TO ALLOW FOR WORKING SPACE FOR BORING OF STREET LIGHT FOOTINGS.

NOTE: –

CONTRACTOR TO UNDERTAKE CLASH CHECK OF ALL SERVICES PRIOR TO COMMENCEMENT.

SERVICE LEVELS INDICATIVE ONLY

DIAL 1100 BEFORE YOU DIG

CONSTRUCTION ISSUE

REV.	DATE	AMENDMENT	DESIGN	DRAWN	CHECKED	APPROVED
1	21.01.22	ISSUED FOR CONSTRUCTION	B.M.	J.J.	B.M.	B.M.

SCALES: A1 1:50 — 0 1.25 2.5 m — A3 1:100

DESIGN FILE S:\300001\DESIGN\12D\STAGE 2 CC\DESIGN FILE.project

ALL DIMENSIONS ARE IN METRES. DO NOT SCALE

adw Johnson
Central Coast
5 Pioneer Avenue,
P.O. Box 3717,
Tuggerah N.S.W. 2259
Phone: (02) 4305 4300
Fax: (02) 4305 4399
email: coast@adwjohnson.com.au
www.adwjohnson.com.au
ABN 62 129 445 398

CLIENT: FRASERS PROPERTY

PROPERTY DESCRIPTION: LOT 100 D.P.1262209 & LOT 1 D.P.859537
EPPING ROAD & LYONPARK ROAD,
MACQUARIE PARK
SSDA 8903

SURVEYED: ADW Johnson

DATUM: GDA94 M.G.A. ZONE 56 A.H.D.

PROJECT: PROPOSED SUBDIVISION

PLAN TITLE: TYPICAL ROAD PROFILES, SERVICE LOCATIONS

PROJECT No.	DISCIPLINE	NUMBER	REV.
300001(2) –	ENG –	902	1

Plotted By: Ben Myles Plot Date: 21/01/22 2:35:48PM Cad File: S:\300001\DRAWINGS\ENGINEERING\CIVIL\STAGE 2 CC ENG\300001(2)-ENG-902.DWG

100mm AT FULL SIZE

This plan includes coloured information. If you have a black and white copy you do not have all of the information. This note is coloured RED.

300001(2)-ENG-903

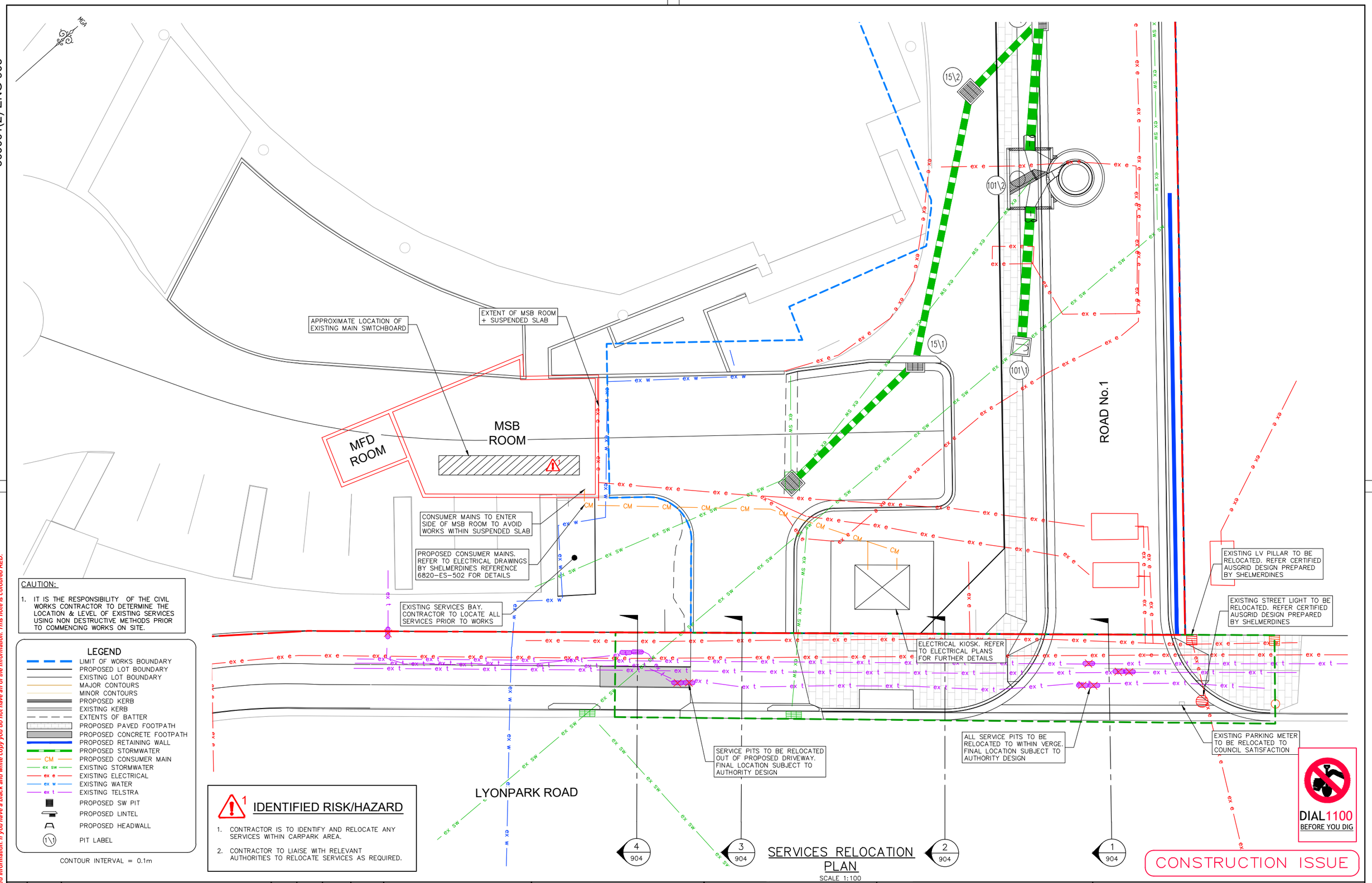

CAUTION:

1. IT IS THE RESPONSIBILITY OF THE CIVIL WORKS CONTRACTOR TO DETERMINE THE LOCATION & LEVEL OF EXISTING SERVICES USING NON DESTRUCTIVE METHODS PRIOR TO COMMENCING WORKS ON SITE.

LEGEND

- LIMIT OF WORKS BOUNDARY
- PROPOSED LOT BOUNDARY
- EXISTING LOT BOUNDARY
- MAJOR CONTOURS
- MINOR CONTOURS
- PROPOSED KERB
- EXISTING KERB
- EXTENTS OF BATTER
- PROPOSED PAVED FOOTPATH
- PROPOSED CONCRETE FOOTPATH
- PROPOSED RETAINING WALL
- PROPOSED STORMWATER
- CM — PROPOSED CONSUMER MAIN
- ex sw — EXISTING STORMWATER
- ex e — EXISTING ELECTRICAL
- ex w — EXISTING WATER
- ex t — EXISTING TELSTRA
- PROPOSED SW PIT
- PROPOSED LINTEL
- PROPOSED HEADWALL
- 1\1 PIT LABEL

CONTOUR INTERVAL = 0.1m

IDENTIFIED RISK/HAZARD

1. CONTRACTOR IS TO IDENTIFY AND RELOCATE ANY SERVICES WITHIN CARPARK AREA.
2. CONTRACTOR TO LIAISE WITH RELEVANT AUTHORITIES TO RELOCATE SERVICES AS REQUIRED.

SERVICES RELOCATION PLAN

SCALE 1:100

CONSTRUCTION ISSUE

100mm AT FULL SIZE

This plan includes coloured information. If you have a black and white copy you do not have all of the information. This note is coloured RED.

REV.	DATE	AMENDMENT	DESIGN	DRAWN	CHECKED	APPROVED
1	21.01.22	ISSUED FOR CONSTRUCTION	B.M.	J.J.	B.M.	B.M.

SCALES: A1 1:100 — 0, 2.5, 5.0m — A3 1:200

DESIGN FILE S:\300001\DESIGN\12D\STAGE 2 CC\DESIGN FILE.project

ALL DIMENSIONS ARE IN METRES. DO NOT SCALE

adw Johnson
Central Coast
5 Pioneer Avenue,
P.O. Box 3717,
Tuggerah N.S.W. 2259
Phone: (02) 4305 4300
Fax: (02) 4305 4399
email: coast@adwjohnson.com.au
www.adwjohnson.com.au
ABN 62 129 445 398

CLIENT: FRASERS PROPERTY

PROPERTY DESCRIPTION: LOT 100 D.P.1262209 & LOT 1 D.P.859537 EPPING ROAD & LYONPARK ROAD, MACQUARIE PARK SSDA 8903

SURVEYED: ADW Johnson

DATUM: GDA94 M.G.A. ZONE 56 A.H.D.

PROJECT: PROPOSED SUBDIVISION

PLAN TITLE: SERVICES RELOCATION PLAN

PROJECT No.	DISCIPLINE	NUMBER	REV.
300001(2)	ENG	903	1

Plotted By: Ben Myles Plot Date: 21/01/22 2:35:51PM Cad File: S:\300001\DRAWINGS\ENGINEERING\CIVIL\STAGE 2 CC ENG\300001(2)-ENG-903.DWG

300001(2)-ENG-904

LEGEND

0.54 — COVER TO EXISTING SERVICES BASED UPON PROPOSED DESIGN LEVELS

0.56 — EXISTING COVER

NOTE:
ALL SERVICES TO BE LOWERED TO STANDARD COVER WHERE REQUIRED. FINAL LOCATIONS SUBJECT TO AUTHORITY DESIGN

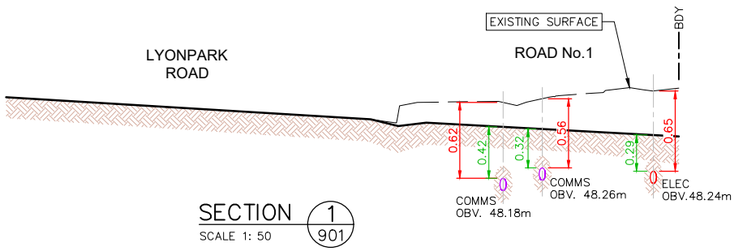

SECTION 1 / 901
SCALE 1: 50

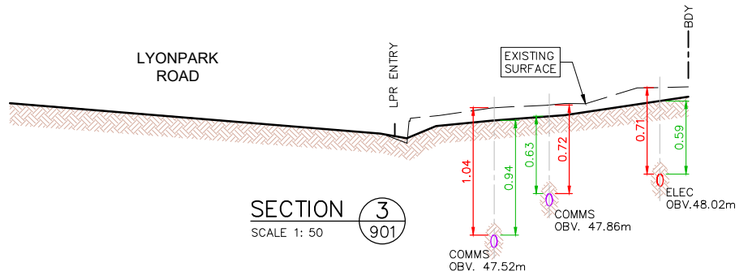

SECTION 3 / 901
SCALE 1: 50

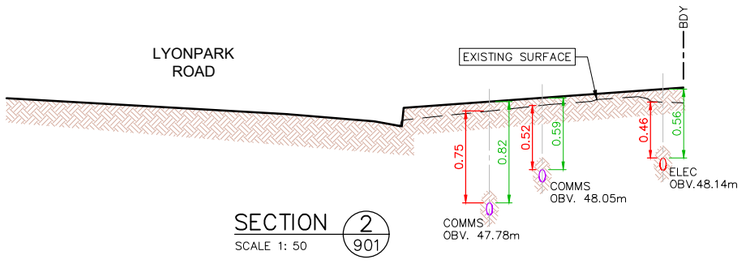

SECTION 2 / 901
SCALE 1: 50

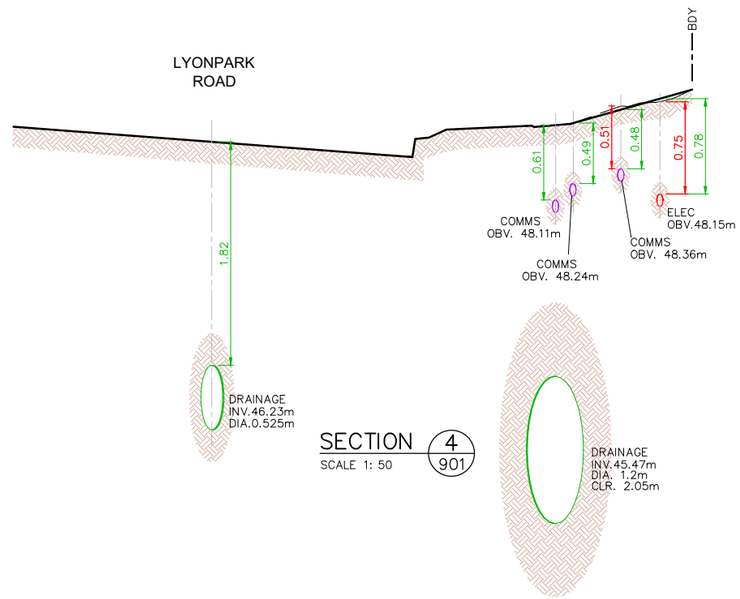

SECTION 4 / 901
SCALE 1: 50

DIAL1100 BEFORE YOU DIG

CONSTRUCTION ISSUE

REV.	DATE	AMENDMENT	DESIGN	DRAWN	CHECKED	APPROVED
1	21.01.22	ISSUED FOR CONSTRUCTION	B.M.	J.J.	B.M.	B.M.

SCALES: A1 1:50 — 0 1.25 2.5 m — A3 1:100

DESIGN FILE S:\300001\DESIGN\12D\STAGE 2 CC\DESIGN FILE.project

ALL DIMENSIONS ARE IN METRES. DO NOT SCALE

adw Johnson
Central Coast
5 Pioneer Avenue,
P.O. Box 3717,
Tuggerah N.S.W. 2259
Phone: (02) 4305 4300
Fax: (02) 4305 4399
email: coast@adwjohnson.com.au
www.adwjohnson.com.au
ABN 62 129 445 398

CLIENT: FRASERS PROPERTY

PROPERTY DESCRIPTION: LOT 100 D.P.1262209 & LOT 1 D.P.859537
EPPING ROAD & LYONPARK ROAD,
MACQUARIE PARK
SSDA 8903

SURVEYED: ADW Johnson
DATUM: GDA94 M.G.A. ZONE 56 A.H.D.

PROJECT: PROPOSED SUBDIVISION

PLAN TITLE: SERVICES RELOCATION SECTIONS

PROJECT No.	DISCIPLINE	NUMBER	REV.
300001(2)	ENG	904	1

Plotted By: Ben Myles Plot Date: 21/01/22 2:35:54PM Cad File: S:\300001\DRAWINGS\ENGINEERING\CIVIL\STAGE 2 CC ENG\300001(2)-ENG-904.DWG

100mm AT FULL SIZE

This plan includes coloured information. If you have a black and white copy you do not have all of the information. This note is coloured RED.

LAND DEVELOPMENT CERTIFICATES

31 January 2022 Our Ref: 41/080/1

Mr Peter Statham
Frasers Property Ivanhoe Pty Ltd
Level 2, 1C Homebush Bay Drive
RHODES NSW 2138

Email

Notification of Certificate Issue

	Lot 100 DP 1262209, Lot 101 DP 1263727, Lot 200 DP 1274184
Site Address:	Ivanhoe Estate comprising Ivanhoe Place, Wilcannia Way, Nyngan Way, Narromine Way and Cobar Way, part of 2-4 Lyonpark Road and portions of Shrimptons Creek, Macquarie Park
Subdivision Works Certificate:	16746

The Stage 1B Subdivision Works Certificate has now been issued and an electronic copy of the certificate and associated documentation has been provided under separate cover. The Minister for Planning and Public Spaces and City of Ryde Council have also been notified of issuance of the certificate as required by legislation.

Please note that prior to commencement of the subdivision works the following is to be undertaken in accordance with the Environmental Planning and Assessment Act 1979:

- A Principal Certifier for the subdivision work is required to be formally appointed; and
- The person having the benefit of the development consent must give at least two days notice to Council and the Principal Certifier of the intention to commence the subdivision work.

We trust the above is satisfactory, however please contact us if you require any further information.

Yours faithfully

Colette Murray
Office Coordinator

LAND DEVELOPMENT CERTIFICATES

Certificate Number:

16746

Subdivision Works Certificate

Environmental Planning and Assessment Act, 1979, Section 6.4 (b)

Determination:	Approved	
Determination Date:	31/01/2022	
Applicant:	Frasers Property Ivanhoe Pty Ltd	
Applicant Address:	Level 2, 1C Homebush Bay Drive, Rhodes NSW 2138	
Consent Authority:	Minister for Planning and Public Spaces	
Development Consent:	Ref: SSD-8903	Dated: 30/04/2020
Modification:	Ref: SSD-8903 MOD 3	Dated: 21/12/2021
Subject Land:	Lot 100 DP 1262209, Lot 101 DP 1263727, Lot 200 DP 1274184	
Site Address:	Ivanhoe Estate comprising Ivanhoe Place, Wilcannia Way, Nyngan Way, Narromine Way and Cobar Way, part of 2-4 Lyonpark Road and portions of Shrimptons Creek, Macquarie Park	
Description of Works:	Subdivision Work – Ivanhoe Stage 1B – Tree Removal, earthworks, roads, bridge, drainage, landscaping and public domain works.	
Approved Documents:	Refer to Schedule 1 (attached) for a listing of the Approved Documents.	
Supporting Documents:	Refer to Schedule 2 (attached) for Supporting Documents applying to this certificate.	
Notes:	Refer to Schedule 3 (attached) for Notes applying to this certificate.	
Certification Statement:	I certify that the subdivision works, as more fully detailed in the approved documents attached to this certificate, if completed strictly in accordance with these approved documents, will comply with the requirements of the Environmental Planning & Assessment Regulation 2000.	

Eric Hausfeld

Eric Hausfeld

Accredited Certifier

BPB Accreditation No. 2416

Schedule 1

Approved Documents:	ADW Johnson
Project Reference:	300001(2)

Drawing	Revision	Date	Description
001	1	21/01/2022	Cover Sheet, Index of Drawings & Locality Sketch
002	1	21/01/2022	General Notes
003	1	21/01/2022	Overall Site Plan
004	1	21/01/2022	Demolition Plan
005	1	21/01/2022	Survey Setout Plan
006	1	21/01/2022	Structural Notes
007	1	21/01/2022	Flood Extents Plan
101	1	21/01/2022	Detail Plan
151	1	21/01/2022	Pavement Plan
152	1	21/01/2022	Pavement Details
181	1	21/01/2022	Subsoil Drainage Plan
201	1	21/01/2022	Typical Road Profiles, Kerb Details & Road Setout Tables
202	1	21/01/2022	Kerb Ramp, Temporary Berm & Bin Footing Details
211	1	21/01/2022	Road Longitudinal Sections Road No. 01 – Sheet 1
212	1	21/01/2022	Road Longitudinal Sections Road No. 01 – Sheet 2
213	1	21/01/2022	Road Longitudinal Sections Road No. 02
231	1	21/01/2022	Road Cross Sections Road No. 01 – Sheet 1
232	1	21/01/2022	Road Cross Sections Road No. 01 – Sheet 2
233	1	21/01/2022	Road Cross Sections Road No. 01 – Sheet 3
234	1	21/01/2022	Road Cross Sections Road No. 01 – Sheet 4
235	1	21/01/2022	Road Cross Sections Road No. 01 – Sheet 5
236	1	21/01/2022	Road Cross Sections Road No. 01 – Sheet 6
237	1	21/01/2022	Road Cross Sections Road No. 01 – Sheet 7
238	1	21/01/2022	Road Cross Sections Road No. 01 – Sheet 8
239	1	21/01/2022	Road Cross Sections Road No. 01 – Sheet 9
240	1	21/01/2022	Road Cross Sections Road No. 02 – Sheet 1
241	1	21/01/2022	Road Cross Sections Road No. 02 – Sheet 2
242	1	21/01/2022	Road Cross Sections Road No. 02 – Sheet 3
243	1	21/01/2022	Road Cross Sections Road No. 02 – Sheet 4
244	1	21/01/2022	Road Cross Sections Road No. 02 – Sheet 5
301	1	21/01/2022	Intersection Details Kerb Returns KR03 & KR04
302	1	21/01/2022	Intersection Details Kerb Returns KR05 & KR06
303	1	21/01/2022	Intersection Details Kerb Returns KR10 & KR11
310	1	21/01/2022	MRV Turning Paths Details Plans
351	1	21/01/2022	Carpark Detail Plan CP07, CP08, CP10 & CP11
352	1	21/01/2022	Carpark Longitudinal Sections CP07, CP08, CP10 & CP11
353	1	21/01/2022	Carpark Detail Plan CP 02, CP03, CP04 & CP05
354	1	21/01/2022	Carpark Longitudinal Sections CP02, CP03 & CP04

Eric Hausfeld

Eric Hausfeld

Accredited Certifier

BPB Accreditation No. 2416

Schedule 1

Approved Documents:	ADW Johnson
Project Reference:	300001(2)

Drawing	Revision	Date	Description
355	1	21/01/2022	Carpark Setout Tables CP02, CP03, CP04 & CP05
361	1	21/01/2022	Overall LIF Carpark Plan
362	1	21/01/2022	LIF Carpark Detail Plan Carpark No. 1
363	1	21/01/2022	LIF Carpark Section Carpark CL No. 1
364	1	21/01/2022	Driveway Longitudinal Sections Driveway No. 1 & No. 2
365	1	21/01/2022	Kerb Return Longitudinal Sections KR101, KR101A, KR102, KR102A & KR102B
366	1	21/01/2022	Footpath No. 1 Longitudinal Section & Typical Carpark No. 1 Details
367	1	21/01/2022	LIF Carpark Detail Plan Carpark No. 2
368	1	21/01/2022	LIF Carpark Section Carpark CL No. 2
369	1	21/01/2022	Driveway Longitudinal Section Driveway No. 03
370	1	21/01/2022	Kerb Return Longitudinal Sections KR103 & KR103A
371	1	21/01/2022	Typical Details & Sections
401	1	21/01/2022	Stormwater Catchment Plan
411	1	21/01/2022	Stormwater Setout Table & Details
421	1	21/01/2022	Stormwater Calculation Charts 20 Year A.R.I.
422	1	21/01/2022	Stormwater Calculation Charts 100 Year A.R.I.
431	1	21/01/2022	Stormwater Longitudinal Sections – Sheet 1
432	1	21/01/2022	Stormwater Longitudinal Sections – Sheet 2
433	1	21/01/2022	Stormwater Longitudinal Sections – Sheet 3
434	1	21/01/2022	Stormwater Longitudinal Sections – Sheet 4
435	1	21/01/2022	Stormwater Longitudinal Sections – Sheet 5
451	1	21/01/2022	Basin Detail Plan
481	1	21/01/2022	Custom Stormwater Pit – Pit No. 1/14
482	1	21/01/2022	Custom Stormwater Pit – Pit No. 1/15
483	1	21/01/2022	Custom Stormwater Pit – Pit No. 1/16
484	1	21/01/2022	Custom Stormwater Pit – Pit No. 1/17
485	1	21/01/2022	Custom Stormwater Pit – Pit No. 3/9
486	1	21/01/2022	Custom Stormwater Pit – Pit No. 3/10
487	1	21/01/2022	Custom Stormwater Pit – Pit No. 3/11
488	1	21/01/2022	Custom Stormwater Pit – Pit No. 3/12
489	1	21/01/2022	Custom Stormwater Pit – Pit No. 3/13
490	1	21/01/2022	Custom Stormwater Pit – Pit No. 15/3
491	1	21/01/2022	Custom Stormwater Pit – Pit No. 15/4
492	1	21/01/2022	Custom Stormwater Pit – Pit No. 15/5
493	1	21/01/2022	Custom Stormwater Pit – Pit No. 100/3

Eric Hausfeld

Eric Hausfeld

Accredited Certifier

BPB Accreditation No. 2416

Schedule 1

Approved Documents:	ADW Johnson
Project Reference:	300001(2)

Drawing	Revision	Date	Description
494	1	21/01/2022	Custom Stormwater Pit – Pit No. 101/1
495	1	21/01/2022	Typical Custom Stormwater Pit Details – Sheet 1
496	1	21/01/2022	Typical Custom Stormwater Pit Details – Sheet 2
497	1	21/01/2022	Typical Custom Stormwater Pit Details – Sheet 3
498	1	21/01/2022	Stormwater Pit 101/2 Setout Plan
499	1	21/01/2022	Custom Stormwater Pit – Pit No. 1/10
501	1	21/01/2022	Site Regrade Plan
551	1	21/01/2022	Retaining Wall Detail Plan
561	1	21/01/2022	Retaining Wall Longitudinal Section RW100
562	1	21/01/2022	Retaining Wall Longitudinal Section Bridge Wall No. 1
563	1	21/01/2022	Retaining Wall Longitudinal Section Existing Retaining Wall
564	1	21/01/2022	Retaining Wall Longitudinal Section RW101
571	1	21/01/2022	Typical Retaining Wall Details & Notes
572	1	21/01/2022	Typical Gabion Wall Details & Notes
573	1	21/01/2022	Typical Gabion Wall Bridging Structure Details
574	1	21/01/2022	Typical Gabion Wall Notes
601	1	21/01/2022	Erosion & Sediment Control Plan
611	1	21/01/2022	Erosion & Sediment Control Details & Notes
701	1	21/01/2022	Bridge Detail Plan
711	1	21/01/2022	Footpath No. 2 Plan & Longitudinal Section
721	1	21/01/2022	Bridge Abutment Longitudinal Section & Headwall Outlet Details
722	1	21/01/2022	Headwall Outlet Details
801	1	21/01/2022	Tree Retention Plan
902	1	21/01/2022	Typical Road Profiles, Service Locations

Approved Documents:	SMEC
Job Number:	30013046

Drawing	Revision	Date	Description
100	03	14/10/2021	Cover Sheet
101	02	28/08/2021	Drawing Schedule
105	03	14/10/2021	General Arrangement – Sheet A
106	03	14/10/2021	General Arrangement – Sheet B
107	02	14/10/2021	General Arrangement – Sheet C
111	03	14/10/2021	Piling Layout

Eric Hausfeld

Eric Hausfeld

Accredited Certifier

BPB Accreditation No. 2416

Schedule 1

Approved Documents:	SMEC
Job Number:	30013046

Drawing	Revision	Date	Description
112	03	14/10/2021	Pile Details
115	03	14/10/2021	Abutment Concrete – Sheet A
116	03	14/10/2021	Abutment Concrete – Sheet B
117	02	20/08/2021	Abutment Concrete – Sheet C
121	03	14/10/2021	Abutment Reinforcement – Sheet A
122	03	14/10/2021	Abutment Reinforcement – Sheet B
123	02	14/10/2021	Abutment Reinforcement – Sheet C
124	02	14/10/2021	Abutment Reinforcement – Sheet D
131	03	14/10/2021	Pier Details – Sheet A
132	03	14/10/2021	Pier Details – Sheet B
133	02	20/08/2021	Pier Details – Sheet C
135	03	14/10/2021	Pier Reinforcement Details – Sheet A
136	03	14/10/2021	Pier Reinforcement Details – Sheet B
141	03	14/10/2021	Bearings
151	03	14/10/2021	Deck Setting Out
152	03	14/10/2021	Deck Concrete – Sheet A
153	03	14/10/2021	Deck Concrete – Sheet B
161	03	14/10/2021	Deck Post Tensioning – Sheet A
162	03	14/10/2021	Deck Post Tensioning – Sheet B
163	03	14/10/2021	Deck Post Tensioning – Sheet C
171	03	14/10/2021	Deck Reinforcement – Sheet A
172	03	14/10/2021	Deck Reinforcement – Sheet B
173	03	14/10/2021	Deck Reinforcement – Sheet C
174	03	14/10/2021	Deck Reinforcement – Sheet D
181	03	14/10/2021	On Structure Barrier Details – Sheet A
182	03	14/10/2021	On Structure Barrier Details – Sheet B
183	03	14/10/2021	On Structure Barrier Details – Sheet C
184	02	20/08/2021	On Structure Barrier Details – Sheet D
185	02	20/08/2021	On Structure Barrier Details – Sheet E
186	03	14/10/2021	Retaining Wall Concrete Details
187	03	14/10/2021	Retaining Wall Reinforcement Details
188	03	14/10/2021	Off Structure Barrier Details Sheet A
189	03	14/10/2021	Off Structure Barrier Details – Sheet B
190	02	14/10/2021	Off Structure Barrier Cycle Rail and Hand Rail Termination Details

Eric Hausfeld

Eric Hausfeld

Accredited Certifier

BPB Accreditation No. 2416

Schedule 1

Approved Documents:	SMEC
Job Number:	30013046

Drawing	Revision	Date	Description
191	03	14/10/2021	Approach Slab Concrete – Sheet A
192	03	14/10/2021	Approach Slab – Sheet B
195	03	14/10/2021	Approach Slab Reinforcement – Sheet A
196	03	14/10/2021	Approach Slab Reinforcement – Sheet B
201	03	14/10/2021	Expansion Joint Details – Sheet A
202	02	14/10/2021	Expansion Joint Details – Sheet B
205	02	20/08/2021	Cover Plate Details – Sheet A
206	02	20/08/2021	Cover Plate Details – Sheet B
211	03	14/10/2021	Scour Protection Details – Sheet A
212	03	14/10/2021	Scour Protection Details – Sheet B
213	01	20/08/2021	Maintenance Access
215	03	14/10/2021	Bar Shapes Diagrams
221	02	14/10/2021	Cladding Details – Sheet A
222	02	14/10/2021	Cladding Details – Sheet B
223	02	14/10/2021	Cladding Details – Sheet C
230	01	20/08/2021	Bridge and Approach Slab Pavement Details
235	02	14/10/2021	Rail Splice Details at Curve Location

Approved Documents:	Hassell
Project Number:	012092

Drawing	Revision	Date	Description
0001	A	16/08/2021	Cover Sheet
0002	C	18/10/2021	Drawing Index
0003	A	16/08/2021	Drawing Legend
0004	C	18/10/2021	Planting Schedule
0100	C	18/10/2021	Site Plan
1001	A	16/08/2021	General Arrangement
1002	A	16/08/2021	General Arrangement
1003	B	18/10/2021	General Arrangement
1004	B	24/08/2021	General Arrangement
1005	C	24/08/2021	General Arrangement

Eric Hausfeld

Eric Hausfeld

Accredited Certifier

BPB Accreditation No. 2416

Schedule 1

Approved Documents:	Hassell
Job Number:	012092

Drawing	Revision	Date	Description
1006	A	16/08/2021	General Arrangement
1007	A	16/08/2021	General Arrangement
1008	A	16/08/2021	General Arrangement
1009	A	16/08/2021	General Arrangement
1010	B	18/10/2021	General Arrangement
5001	A	16/08/2021	Detail Plan – Shrimptons Creek Bridge
5201	A	16/08/2021	Details – Furniture & Fixtures
5202	A	16/08/2021	Details – Furniture & Fixtures
5203	A	16/08/2021	Details – Furniture & Fixtures
5301	A	16/08/2021	Details – Paving
5302	A	16/08/2021	Details – Paving
5401	B	18/10/2021	Details - Planting

Eric Hausfeld

Eric Hausfeld

Accredited Certifier

BPB Accreditation No. 2416

Schedule 2

Supporting Documents

- City of Ryde Development Control Plan 2014 Part 8.5

  https://www.ryde.nsw.gov.au/files/assets/public/development/dcp/dcp-2014-8.5-public-civil-works.pdf

- City of Ryde Development Control Plan 2014 Part 8.5

  https://www.ryde.nsw.gov.au/Business-and-Development/Planning-Controls/Development-Control-Plan/City-of-Ryde-Standard-Drawings

- Engineer's Design Certificate – Shrimptons Creek Crossing, dated 26/11/2021 as issued by Vishnu Balakrishnan of SMEC Australia Pty Ltd
- Design Compliance Certificate, dated 24/01/2022, as issued by Craig Bennett and Melissa-Paige Cooper of ADW Johnson Pty Ltd
- Slope Stability Assessment of Existing Retaining Wall, dated 20/04/2018 as issued by Douglas Partners Pty Ltd
- Structural Report Condition Assessment of Existing Retaining Wall, Revision A, dated 1/06/2021 as issued by ADW Johnson Pty Ltd
- Long Service Levy Receipt No. 00441550
- Letter (Condition B36 – Environmental Sustainability), dated 29/07/2021 as issued by Julia Halioua of Frasers Property Australia Pty Limited
- Letter (Condition B74 – Access Compliance), dated 17/07/2020 as issued by Peter Statham of Frasers Property Australia Pty Limited
- Letter (Condition B82 – Bicycle Facilities), dated 28/07/2021 as issued by Peter Statham of Frasers Property Australia Pty Limited
- Midtown Materials & Finishes Schedule, L-SB-6001, dated 18/10/2021 as issued by Hassell
- Bond Documents receipted 12/10/2020
- Ryde City Council Concurrence (Condition B97) – email dated 03/09/2021
- Ryde City Council Concurrence (Condition 102) – email dated 9/10/2020
- Peer Review Shrimpton Creek Bridge, dated 2310/2021 as issued by Dr Gregg Klopp of Robert Bird Group.

Eric Hausfeld

Eric Hausfeld

Accredited Certifier

BPB Accreditation No. 2416

Schedule 2

Supporting Documents

- Revised Pavement Thickness Design Advice, dated 13/08/2020 as issued by Douglas Partners
- Assessment of Pavement Subgrade Conditions Stage 1B, dated 12/08/2021 as issued by Douglas Partners
- Proposed Residential Development – Carpark, Rev 0, dated 30/06/2021 as issued by Douglas Partners
- Ivanhoe Estate Stage 1B – Civil Design Statement, dated 21/01/2022, as issued by Nathan Delaney of ADW Johnson Pty Ltd
- Ivanhoe Estate – Stage 1B Public Domain Landscape Works - Landscape Architectural Statement, dated 24/01/2022 as issued by Georgia darling of Hassell
- Shrimptons Creek Proposed Bridge Detailed Design Flood and Scour Assessment, Rev 2, dated 1/10/2021 as issued by BMT
- Flood Impact Assessment of the Proposed Pedestrian Pathway, dated 6/08/2021 as issued by BMT
- Utility Consultation

Eric Hausfeld

Eric Hausfeld

Accredited Certifier

BPB Accreditation No. 2416

Schedule 3

Notes

- This certificate does not approve or authorise any proposed works within Lyonpark Road which require a Roads Act approval to be issued by the City of Ryde.

Eric Hausfeld

Eric Hausfeld

Accredited Certifier

BPB Accreditation No. 2416

Member of the Surbana Jurong Group

local people
global experience

26 November 2021

Fraser Property Group
L2 1C Homebush Bay Drive
Rhodes, NSW 2138

Attention: Chris Koukoutaris

Dear Mr Koukoutaris

RE: ENGINEER'S DESIGN CERTIFICATE
Shrimptons Creek Crossing

From: SMEC Australia Pty (ABN 47 065 475 149)

SMEC have undertaken the design of the Shrimptons Creek Bridge crossing in accordance with the following documentation:

Design Documentation for Shrimptons Creek:

DRAWING NO.	TITLE	REV
30013046-100	COVER SHEET	3
30013046-101	DRAWING SCHEDULE	2
30013046-105	GENERAL ARRANGEMENT SHEET A	3
30013046-106	GENERAL ARRANGEMENT SHEET B	3
30013046-107	GENERAL ARRANGEMENT SHEET C	2
30013046-111	PILING LAYOUT	3
30013046-112	PILE DETAILS	3
30013046-115	ABUTMENT CONCRETE SHEET A	3
30013046-116	ABUTMENT CONCRETE SHEET B	3
30013046-117	ABUTMENT CONCRETE SHEET C	2
30013046-121	ABUTMENT REINFORCEMENT SHEET A	3
30013046-122	ABUTMENT REINFORCEMENT SHEET B	3
30013046-123	ABUTMENT REINFORCEMENT SHEET C	2
30013046-124	ABUTMENT REINFORCEMENT SHEET D	2

SMEC
Level 5, 20 Berry Street
North Sydney, NSW 2060, Australia
T +61 2 9925 5555 F +61 2 9925 5566 E sydney@smec.com
www.smec.com

Quality Management · ISO 9001 Global-Mark.com.au® OHS Management · AS/NZS 4801 Global-Mark.com.au® Environmental Management · ISO14001 Global-Mark.com.au®
SMEC Australia Pty Ltd ABN 47 065 475 149
SMEC International Pty Ltd ABN 32 065 440 619
SMEC Services Pty Ltd ABN 79 066 504 792
SMEC Holdings Pty Ltd ABN 84 057 274 049

Member of the Surbana Jurong Group

DRAWING NO.	TITLE	REV
30013046-131	PIER DETAILS SHEET A	3
30013046-132	PIER DETAILS SHEET B	3
30013046-133	PIER DETAILS SHEET C	2
30013046-135	PIER REINFORCEMENT DETAILS SHEET A	3
30013046-136	PIER REINFORCEMENT DETAILS SHEET B	3
30013046-141	BEARINGS	3
30013046-151	DECK SETTING OUT	3
30013046-152	DECK CONCRETE SHEET A	3
30013046-153	DECK CONCRETE SHEET B	3
30013046-161	DECK POST TENSIONING SHEET A	3
30013046-162	DECK POST TENSIONING SHEET B	3
30013046-163	DECK POST TENSIONING SHEET C	3
30013046-171	DECK REINFORCEMENT SHEET A	3
30013046-172	DECK REINFORCEMENT SHEET B	3
30013046-173	DECK REINFORCEMENT SHEET C	3
30013046-174	DECK REINFORCEMENT SHEET D	3
30013046-181	ON STRUCTURE BARRIER DETAILS SHEET A	3
30013046-182	ON STRUCTURE BARRIER DETAILS SHEET B	3
30013046-183	ON STRUCTURE BARRIER DETAILS SHEET C	3
30013046-184	ON STRUCTURE BARRIER DETAILS SHEET D	2
30013046-185	ON STRUCTURE BARRIER DETAILS SHEET E	2
30013046-186	RETAINING WALL CONCRETE DETAILS	3
30013046-187	RETAINING WALL REINFORCEMENT DETAILS	3
30013046-188	OFF STRUCTURE BARRIER DETAILS SHEET A	3
30013046-189	OFF STRUCTURE BARRIER DETAILS SHEET B	3
30013046-190	OFF STRUCTURE BARRIER CYCLE RAIL AND HAND RAIL TERMINATION DETAILS	2

DRAWING NO.	TITLE	REV
30013046-191	APPROACH SLAB CONCRETE SHEET A	3
30013046-192	APPROACH SLAB CONCRETE SHEET B	3
30013046-195	APPROACH SLAB REINFORCEMENT SHEET A	3
30013046-196	APPROACH SLAB REINFORCEMENT SHEET B	3
30013046-201	EXPANSION JOINT DETAILS SHEET A	3
30013046-202	EXPANSION JOINT DETAILS SHEET B	2
30013046-205	COVER PLATE DETAILS SHEET A	2
30013046-206	COVER PLATE DETAILS SHEET B	2
30013046-211	SCOUR PROTECTION DETAILS SHEET A	3
30013046-212	SCOUR PROTECTION DETAILS SHEET B	3
30013046-213	MAINTENANCE ACCESS	1
30013046-215	BAR SHAPES DIAGRAMS	3
30013046-221	CLADDING DETAILS SHEET A	2
30013046-222	CLADDING DETAILS SHEET B	2
30013046-223	CLADDING DETAILS SHEET C	2
30013046-230	BRIDGE AND APPROACH SLAB PAVEMENT DETAILS	1
30013046-235	RAIL SPLICE DETAILS AT CURVE LOCATION	2

The bridge drawings were supplemented by the following documents:

1) BMT "Shrimptons Creek Proposed Bridge Detailed Design Flood and Scour Assessment" report reference R.A11013.001.02, October 2021
2) ADW Johnson "Utility Services Report – to accompany the Stage 1 development application for the Ivanhoe Estate Masterplan – A state significant development", 5 October 2018
3) Shelmerdines Consulting Engineers drawing AN-22381, 20/04/2021 rev 0
4) Fibrecorp drawing SK01, 8 June 2021, rev 0
5) Sydney Water case 192226ww, 7/7/2021, rev 03
6) Sydney Water case 189977pw, 10/06/2021, rev 02
7) Douglas Partners Geotechnical Investigation of Ivanhoe Estate, reports 2018-01-08_86043.01.R.001, 002 and 003

The Bridge Design has been carried out in accordance with the requirements of Road Bridge – Detailed Design condition B103 as shown:

ROAD BRIDGE – DETAILED DESIGN

B103. Detailed design plans, calculations and other supporting documentations prepared by a Chartered Structural Engineer (registered on the NER of Engineers Australia) must be submitted to the Certifier prior to the issue of any Subdivision Works Certificate for the road bridge to be built across Shrimptons Creek connecting the proposed development to Lyonpark Road. The details shall include, but not limited to, the following:

(a) the minimum overall width of the bridge is to be 14 m

(b) the provision of a suitable guardrail along both edges of the bridging structure that complies with Section 2.4.5.3 of AS2890.1-2004 and RMS requirements

(c) provide the minimum height of the trafficable, including vehicle and pedestrian, areas of the bridge. From a stormwater perspective, the report shall clearly demonstrate the impact of the proposed bridge, including but not limited to abutments, piers, wing walls etc.

(d) maintain the height of the lowest structural element of the bridge at the 1% AEP (100-year ARI) flood level + 500 mm freeboard as a minimum

(e) the report shall assess the impact of embankment works on both north-western and north-eastern sides of the bridge on the proposed approach roads and the surrounding properties to ensure any adverse impact from ponding of water (if any) is alleviated

(f) concept drawings, correspondence and approvals from utility authorities with regards to any utility services that will need to be installed in the proposed bridge

(g) scour protection shall be provided for the bridge piers, abutment and constricted creek waterway and riparian corridor for events up to the 2% AEP (50-year ARI). Provision for appropriate plant access to the bridge for maintenance, including for repair and replacement of the scour protection, shall be provided.

The Applicant shall provide an independent review by a suitably qualified structural engineer verifying the design of the bridge and associated structures satisfies (a) to (g) above and all relevant design requirements.

A copy of the approved plans, documentation and independent review, demonstrating compliance with the above, must be provided to the Certifier prior to the commencement of the relevant works.

Other relevant codes, standards and technical directions relating to the design of the structure are as follows:

REFERENCE	DOCUMENT TITLE
AS5100 -2017	Bridge Design
AS/NZS 1170.2-2011	Structural design actions - Part 2: Wind actions
AS 1170.4-2007	Structural design actions - Part 4: Earthquake
AS2159-2009	Piling - Design and installation
AS3610-2010	Formwork for Concrete
AS/NZS 4671-2001	Steel reinforcing material
AS/NZS4672.1-2007	Steel prestressing materials
AS3678-1999	Structural steel – Hot-rolled plates, floorplates and slabs
TfNSW B284-2020	Installation of Bridge Bearings
TfNSW R116 – 2020	Heavy Duty Dense Graded Asphalt
TfNSW B343 – 2020	Preformed and liquid applied waterproofing membrane systems

Member of the Surbana Jurong Group

SMEC certify that the requirements of the above documents have been met as evidence by the drawings and other documents listed in this letter and are:

(a) In accordance with the terms the DA approval, with particular reference to conditions B91, B103, D41 SSDA 8903 and D43

(b) are adequate and suitable for their intended purpose, as stated in, or implied from or contemplated by the DA approval; and

Kind Regards

Signed for and on behalf of

SMEC Australia Pty by Vishnu Balakrishnan, BSc(Hons), FIStruct E, MICE, MIEAust, CPEng, C Eng, Chief Technical Principal (Structures)

Ref: CB/MPC 300001(2)

24th January 2022

Frasers Property Limited
Level 3, Building C, 1 Homebush Bay Drive
RHODES NSW 2138

Attention: Chris Koukoutaris

Dear Chris,

DESIGN COMPLIANCE CERTIFICATE

Council: Ryde City Council
Development: Ivanhoe Estate - Stage 1B
Address: Lot 100 (DP 1262209) & Lot 1 (DP 859537), Epping Rd & Lyonpark Rd, Macquarie Park NSW 2113

This Design Compliance Certificate confirms that the structural design components as shown on the engineering plans prepared by ADW Johnson (reference 300001(2) revision 1 dated 21/01/2022) have been designed by a suitably qualified civil/structural engineer in accordance with the following Australian Standards:

- AS1170.0-2002: Structural Design Actions Part 0: General Principles
- AS1170.1-2002: Structural Design Actions Part 1: Permanent, Imposed and Other Actions
- AS1170.2-2011: Structural Design Actions Part 2: Wind Actions
- AS1170.4-2007: Structural Design Actions Part 4: Earthquake actions in Australia
- AS3600-2018: Concrete Structures
- AS3700-2018: Masonry Structures
- AS4675-2002: Earth-Retaining Structures
- AS2159-2009: Piling – Design and Installation

Note this certificate does not certify the design or specification of any precast or proprietary products.

This certification confirms that the retaining walls have comply with condition B50 of the consent.

ADW JOHNSON PTY LIMITED
ABN 62 129 445 398

Sydney
Level 35 One International Towers
100 Barangaroo Avenue
Sydney NSW 2000
02 8046 7411
sydney@adwjohnson.com.au

Central Coast
5 Pioneer Avenue, Tuggerah NSW 2259
PO Box 3717, Tuggerah NSW 2259
02 4305 4300
coast@adwjohnson.com.au

Hunter
7/335 Hillsborough Road,
Warners Bay NSW 2282
02 4978 5100
hunter@adwjohnson.com.au

www.adwjohnson.com.au

Please contact the undersigned should you require anything further.

Yours faithfully,

Craig Bennett
Senior Structural Engineer
B.Eng(Civil), MIEAust

Melissa-Paige Cooper
Civil/Structural Engineer
B.Eng(Civil), MIEAust CPEng NER

Douglas Partners
Geotechnics / Environment / Groundwater

Douglas Partners Pty Ltd
ABN 75 053 980 117
www.douglaspartners.com.au
96 Hermitage Road
West Ryde NSW 2114
PO Box 472
West Ryde NSW 1685
Phone (02) 9809 0666
Fax (02) 9809 4095

Frasers Property Ivanhoe Pty Ltd
c/- Citta Property Group Pty Limited
Level 23, 6 O'Connell Street
Sydney NSW 2000

Project 86043.02
20 April 2018
R.002.Rev0
SCP:cm

Attention: Joe Zannino

Email: joezannino@citta.com.au

Dear Mr Joe Zannino

Slope Stability Assessment of Existing Retaining Wall
Proposed Road Development
Ivanhoe Estate, Macquarie Park

1. Introduction

This report presents the results of slope stability assessment of an existing retaining wall, undertaken by Douglas Partners Pty Ltd (DP) to support the proposed construction of a new road linking Lyonpark Road and the proposed Ivanhoe Estate development on the western side of Shrimptons Creek, at Macquarie Park. The work was commissioned by Frasers Property Ivanhoe Pty Ltd.

A new, flexible pavement is proposed at the toe of an existing crib retaining wall at 6-8 Lyonpark Road, which is adjacent and parallel to the boundary with 2-4 Lyonpark Road. Excavation will be required up to approximately 1 m distance from the front of the retaining wall for the construction of new pavements.

The scope of work described herein was to assess the global stability of the retaining wall, given the likely excavation requirements adjacent to the site, to support planning and design of proposed construction works associated with the new road. The assessment was based on the results of the geotechnical investigation of the wall footings described in DP Report 86043.02.R.001.Rev0, and should be read in conjunction with that report.

2. Proposed Works

The proposed road construction works have been outlined in DP Report 86043.02.R.001.Rev0, and reference should be made to that report for further details. The works are expected to require excavation to depths of up to 0.9 m to 1.0 m below existing ground levels, with excavation to approach to within 1 m of the existing retaining wall toe.

The results of the geotechnical investigation indicated that the footing of the retaining wall is variously located at 0.3 m to 0.6 m below existing ground levels on apparently moderately compacted filling or shale. No signs of instability were observed in the area above the retaining wall.

It is noted that the shale may be relatively local, as other test locations in the area have generally encountered deeper clay.

3. Comment

3.1 Methodology and Adopted Sections

Stability analyses were undertaken using a limit-equilibrium analysis software package SLOPE/W by adopting the Morgenstern and Price method and assuming circular failure surfaces.

The purpose of the slope stability assessment was to assess the potential for increased instability of the retaining wall in the short term, given the proposed, temporary excavations in front of the retaining wall. In the long term, stability is expected to be improved or unchanged, due to the proposed placement of new and improved filling to existing or above existing levels.

A minimum Factor of Safety (FOS) of 1.5 was considered an appropriate minimum factor of safety for the existing condition of the wall, which does not exhibit signs of global instability, and initial analysis was undertaken to confirm that the adopted soil parameter (eg shear strength) obtained this factor of safety. Analysis was then undertaken to assess the potential influence of excavation on the factor of safety, while adopting a minimum acceptable FOS of 1.3 for the temporary excavation case. The geometry of the excavation was altered as necessary to obtain this minimum FOS, or a depth of excavation of 1.0 m.

For the analysis, a surcharge of 10 kPa was adopted from 0.5 m behind the crest of the slope to model the surcharge due to cars in the parking area behind the retaining wall.

Within the analysis, the retaining wall was modelled as a thin zone of high cohesion (and thus, strength), preventing failure through the retaining wall. In other words, no consideration has been given to the risk of internal shear failures through the wall. While shear failure through the retaining wall is a potential failure mode for crib retaining walls that are not suitably connected, for the relatively shallow toe and proposed works, global stability below the footing is expected to be the critical case for the temporary works. Shear failures through the wall are expected to be largely unaffected by the proposed works.

3.2 Geotechnical Models and Parameters

Based on the information obtained from the geotechnical investigation and site visits, model sections were adopted at:

- **Chainage 510**, near LP22, where the proposed road alignment changes from fill to cut.

  This location was adopted as the retaining wall height is relatively high (1.6 m total height, including a slope above the crest), and excavation below the existing ground level is likely to be significant where excavation is to be undertaken to the base of the filling. The wall geometry is based on a section at this chainage provided by ADW Johnson Pty Limited (ADWJ), civil engineers for the project.

  The ground conditions in this area have been modelled as granular filling, for both backfill behind the retaining wall, and ground conditions below the retaining wall. The natural clays, which are anticipated at a depth of approximately 1 m below ground level, are not considered to govern global slope stability, and have not been considered in the model.

- **Chainage 480** – between LP21 and LP22, where the retaining wall has a similar geometry, but the ground in front of the wall has an existing batter and the wall foundation is taken to greater depth – 0.5 m below ground level (based on the 0.6 m deep toe level at LP21).

  This location was adopted as altered foundation and ground conditions have been identified. A change in stratigraphy to clay soil from ground level has been assumed in this model, reflecting the cohesive soils encountered at LP21.

No groundwater was considered in the model as no groundwater was observed during the investigation, and as the proposed excavation works are temporary.

The approximate locations of the adopted sections are shown in Drawing 3, attached.

'Drained' conditions were assumed in the stiff to hard cohesive soils, as these were expected to be critical for the over-consolidated material, and the following parameters were adopted for the geotechnical model:

- A soil unit weight of 20 kN/m^3
- A friction angle of 35° for the (at least moderately compacted) granular filling; and,
- A friction angle of 25° and cohesion of 5 kPa for stiff (or moderately compacted) clay soil.

In the absence of information on ground conditions behind the wall, the backfill material behind the wall (i.e. supported by the wall) has been assumed to have the same characteristics as the moderately compacted granular filling encountered below and in front of the wall.

3.3 Results

The results of the analysis are summarised in Table 1, below.

Table 1: Results of Analysis

Case	Result	Comment
1 - Ch510 Check on Existing FOS	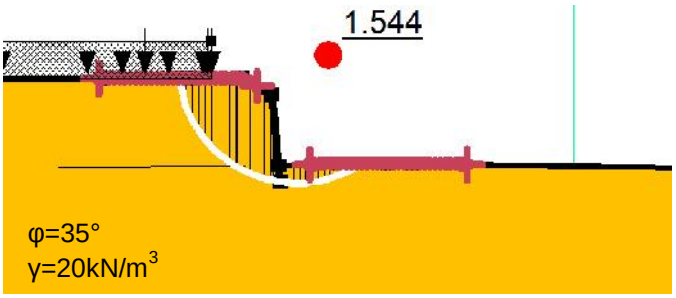	Resulting FOS = 1.5 (OK)
Case 2 – Ch 510 Excavation (berm) case	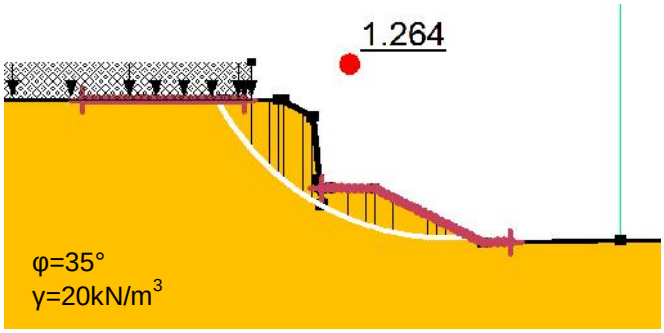	FOS of 1.3 achieved for excavation from 1 m distance, (ie 1 m berm) then battered at 2H:1V to 1 m depth
Case 3 – Ch 510 Excavation (no berm) case	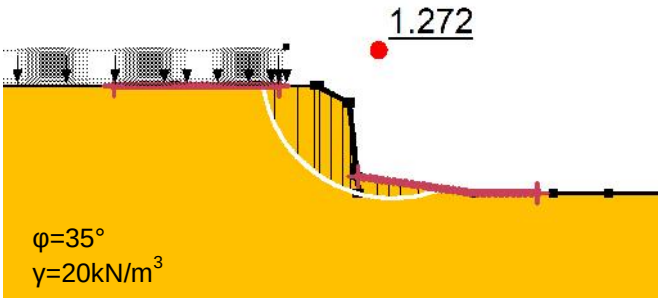	FOS of 1.3 achieved for excavation to (max) 0.3 m depth, at 7H:1V (no berm)
Case 4 – Ch 480 Check on existing case	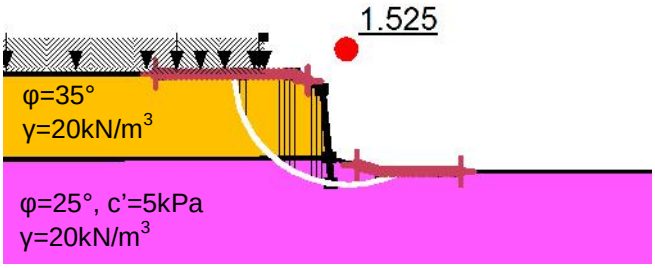	FOS is 1.5 (OK)

Case	Result	Comment
Case 5 – Ch 480 Excavation (berm) case	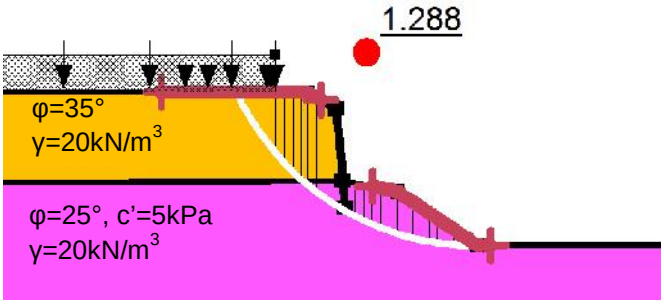	FOS of 1.3 achieved for excavation from 1m distance, then battered at 1.5(H):1(V) to 1m depth
Case 6 – Ch 480 Excavation (no berm) case	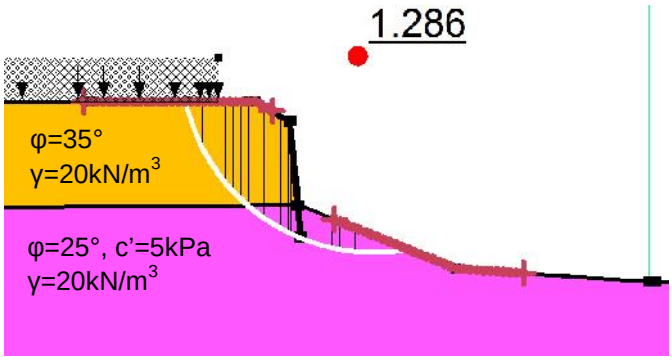	FOS is 1.3 with excavation at 2.5H:1V to 1 m depth

The analysis at Chainage 510 indicates that the retaining wall founded on granular material is very sensitive to excavation below the toe level, with a relatively flat slope allowing only limited excavation to toe level. The use of a 1 m wide berm, allows for a 2H:1V batter for excavation to 1 m depth (per Case 2). By comparison, without a berm, a relatively flat 7H:1V batter is required for excavation to only 0.3 m depth. The resistance against global stability failure in granular materials is due to friction developed from the weight of soil on the passive (downslope) side of the retaining wall, and the difference in volume (proportional to weight) of this resisting material for slopes with and without a berm can be seen in the figures presented in Table 1 for Cases 2 and 3, respectively.

The analysis at the intermediate chainage indicates that the wall with greater toe depth, in clay, is less sensitive to the excavation profile, and steeper batters are achievable, as shown in the "Comments" column of Table 1 (ie 1.5H:1V batter at 1 m from the wall, or 2.5H:1V from the wall, both to 1 m depth.

3.4 Further Comments

The above analysis indicates likely excavation limits for extensive, open excavation in front of the retaining wall, based on the existing information. The following is noted:

- The above analysis is relatively sensitive to small variations in excavation geometry, and further assessment may be warranted if deeper excavation is proposed over a significant area. Accidental over-excavation has not been considered and should be backfilled immediately, unless otherwise advised by a geotechnical professional.

- The analysis is based on 2D analysis, and deeper or closer excavation would be acceptable even in the modelled ground conditions if subject to additional measures, such as the use of a 'hit-and-miss construction sequence with panels limits to say, 5 m, to provide support to the wall.
- Assumptions have been made on the type and compaction of material behind the wall. If desired, investigation behind the wall (or through the wall face, if possible) may indicate that better material is present, and allow the analysis to be refined.
- The analysis does not consider alternative stabilisation options, such as underpinning, anchoring or soil nails through the wall, which could be used to improve the wall stability.

Several assumptions were made in carrying out the analyses, which should be verified in the early stages of excavation, and may allow the analysis and excavation approach to be refined. These include:

- Confirming the foundation conditions and depth of footings at several locations along the footing, to assess the sensitivity of the retaining wall to excavation. For example, foundations on shale, such as at LP21 are expected to generally be insensitive to excavation in front of the toe (i.e. no risk of global slope instability or failure).
- Confirming the preferred approach to general excavation works, to confirm the actual excavation depth required;
- Confirming the strength of materials at and below the foundation toe.
- Confirming the condition of the retaining wall, given that the existing wall is largely obscured by vegetation.

The above checks, and subsequent re-analysis (if appropriate) may allow more extensive excavation to occur more readily across part of the excavation length.

4. Limitations

Douglas Partners (DP) has prepared this report for this project at 2-4 Lyonpark Road in accordance with DP's proposal dated 18 January 2018 and acceptance received from Joe Zannino on behalf of Frasers Property Ivanhoe Pty Ltd dated 29 January 2018. The work was carried out in accordance with the Consultancy Services Deed between Frasers Property Ivanhoe Pty Ltd and Douglas Partners Pty Ltd dated 15 November 2017. This report is provided for the exclusive use of for this project only and for the purposes as described in the report. It should not be used by or relied upon for other projects or purposes on the same or other site or by a third party. Any party so relying upon this report beyond its exclusive use and purpose as stated above, and without the express written consent of DP, does so entirely at its own risk and without recourse to DP for any loss or damage. In preparing this report DP has necessarily relied upon information provided by the client and/or their agents.

The results provided in the report are indicative of the sub-surface conditions on the site only at the specific sampling and/or testing locations, and then only to the depths investigated and at the time the work was carried out. Sub-surface conditions can change abruptly due to variable geological

processes and also as a result of human influences. Such changes may occur after DP's field testing has been completed.

DP's advice is based upon the conditions encountered during the investigations on the site by DP. The accuracy of the advice provided by DP in this report may be affected by undetected variations in ground conditions across the site between and beyond the sampling and/or testing locations. The advice may also be limited by budget constraints imposed by others or by site accessibility.

This report must be read in conjunction with all of the attached notes and should be kept in its entirety without separation of individual pages or sections. DP cannot be held responsible for interpretations or conclusions made by others unless they are supported by an expressed statement, interpretation, outcome or conclusion stated in this report.

This report, or sections from this report, should not be used as part of a specification for a project, without review and agreement by DP. This is because this report has been written as advice and opinion rather than instructions for construction.

The contents of this report do not constitute formal design components such as are required, by the Health and Safety Legislation and Regulations, to be included in a Safety Report specifying the hazards likely to be encountered during construction and the controls required to mitigate risk. This design process requires risk assessment to be undertaken, with such assessment being dependent upon factors relating to likelihood of occurrence and consequences of damage to property and to life. This, in turn, requires project data and analysis presently beyond the knowledge and project role respectively of DP. DP may be able, however, to assist the client in carrying out a risk assessment of potential hazards contained in the Comments section of this report, as an extension to the current scope of works, if so requested, and provided that suitable additional information is made available to DP. Any such risk assessment would, however, be necessarily restricted to the geotechnical components set out in this report and to their application by the project designers to project design, construction, maintenance and demolition.

Please contact the undersigned if you have any questions on this matter.

Yours faithfully
Douglas Partners Pty Ltd

Reviewed by

Sally Peacock
Associate/Geotechnical Engineer

pp
Bruce McPherson
Principal

Attachments: About this Report
Drawing 3

About this Report

Douglas Partners

Introduction

These notes have been provided to amplify DP's report in regard to classification methods, field procedures and the comments section. Not all are necessarily relevant to all reports.

DP's reports are based on information gained from limited subsurface excavations and sampling, supplemented by knowledge of local geology and experience. For this reason, they must be regarded as interpretive rather than factual documents, limited to some extent by the scope of information on which they rely.

Copyright

This report is the property of Douglas Partners Pty Ltd. The report may only be used for the purpose for which it was commissioned and in accordance with the Conditions of Engagement for the commission supplied at the time of proposal. Unauthorised use of this report in any form whatsoever is prohibited.

Borehole and Test Pit Logs

The borehole and test pit logs presented in this report are an engineering and/or geological interpretation of the subsurface conditions, and their reliability will depend to some extent on frequency of sampling and the method of drilling or excavation. Ideally, continuous undisturbed sampling or core drilling will provide the most reliable assessment, but this is not always practicable or possible to justify on economic grounds. In any case the boreholes and test pits represent only a very small sample of the total subsurface profile.

Interpretation of the information and its application to design and construction should therefore take into account the spacing of boreholes or pits, the frequency of sampling, and the possibility of other than 'straight line' variations between the test locations.

Groundwater

Where groundwater levels are measured in boreholes there are several potential problems, namely:

- In low permeability soils groundwater may enter the hole very slowly or perhaps not at all during the time the hole is left open;
- A localised, perched water table may lead to an erroneous indication of the true water table;
- Water table levels will vary from time to time with seasons or recent weather changes. They may not be the same at the time of construction as are indicated in the report; and
- The use of water or mud as a drilling fluid will mask any groundwater inflow. Water has to be blown out of the hole and drilling mud must first be washed out of the hole if water measurements are to be made.

More reliable measurements can be made by installing standpipes which are read at intervals over several days, or perhaps weeks for low permeability soils. Piezometers, sealed in a particular stratum, may be advisable in low permeability soils or where there may be interference from a perched water table.

Reports

The report has been prepared by qualified personnel, is based on the information obtained from field and laboratory testing, and has been undertaken to current engineering standards of interpretation and analysis. Where the report has been prepared for a specific design proposal, the information and interpretation may not be relevant if the design proposal is changed. If this happens, DP will be pleased to review the report and the sufficiency of the investigation work.

Every care is taken with the report as it relates to interpretation of subsurface conditions, discussion of geotechnical and environmental aspects, and recommendations or suggestions for design and construction. However, DP cannot always anticipate or assume responsibility for:

- Unexpected variations in ground conditions. The potential for this will depend partly on borehole or pit spacing and sampling frequency;
- Changes in policy or interpretations of policy by statutory authorities; or
- The actions of contractors responding to commercial pressures.

If these occur, DP will be pleased to assist with investigations or advice to resolve the matter.

About this Report

Site Anomalies

In the event that conditions encountered on site during construction appear to vary from those which were expected from the information contained in the report, DP requests that it be immediately notified. Most problems are much more readily resolved when conditions are exposed rather than at some later stage, well after the event.

Information for Contractual Purposes

Where information obtained from this report is provided for tendering purposes, it is recommended that all information, including the written report and discussion, be made available. In circumstances where the discussion or comments section is not relevant to the contractual situation, it may be appropriate to prepare a specially edited document. DP would be pleased to assist in this regard and/or to make additional report copies available for contract purposes at a nominal charge.

Site Inspection

The company will always be pleased to provide engineering inspection services for geotechnical and environmental aspects of work to which this report is related. This could range from a site visit to confirm that conditions exposed are as expected, to full time engineering presence on site.

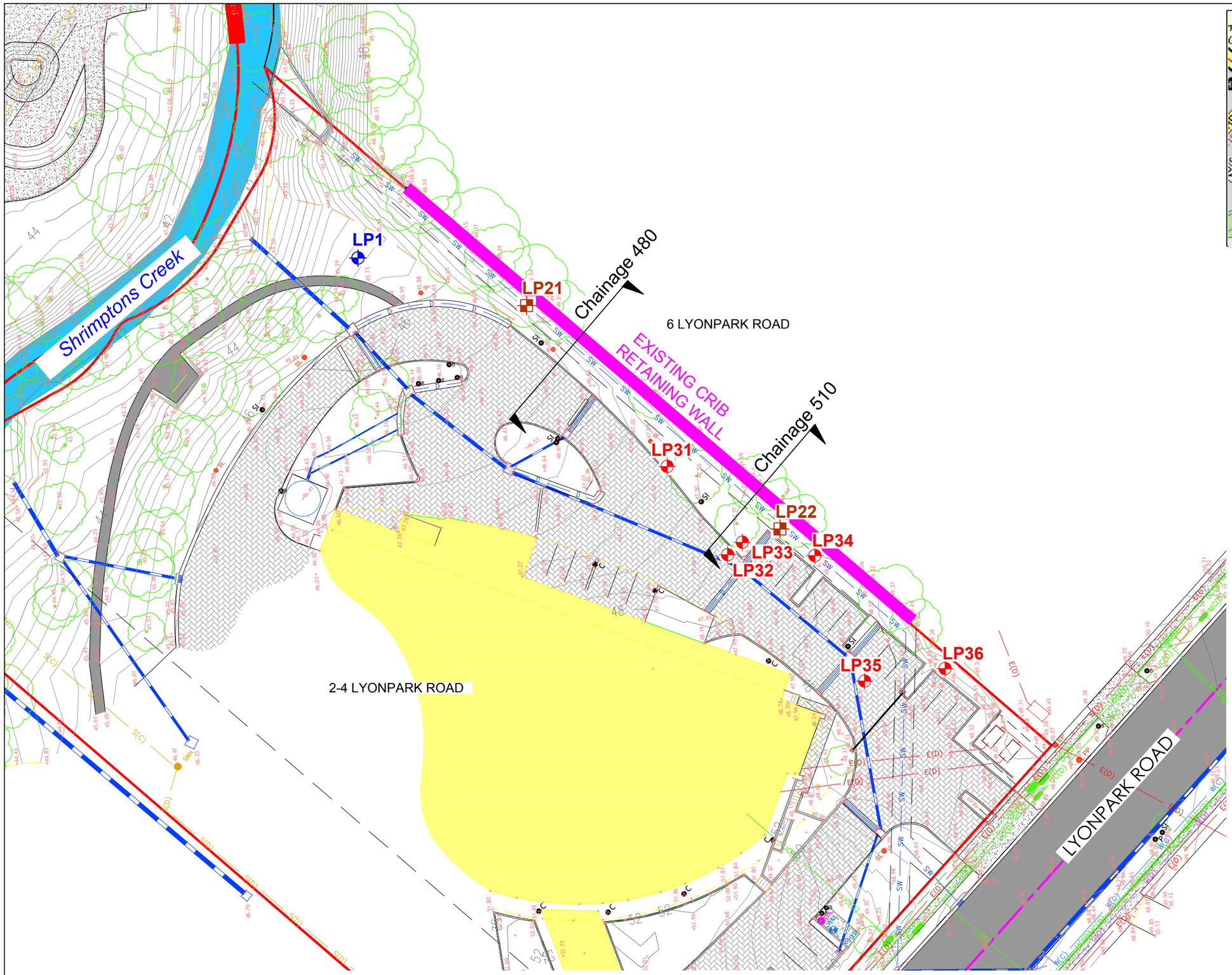

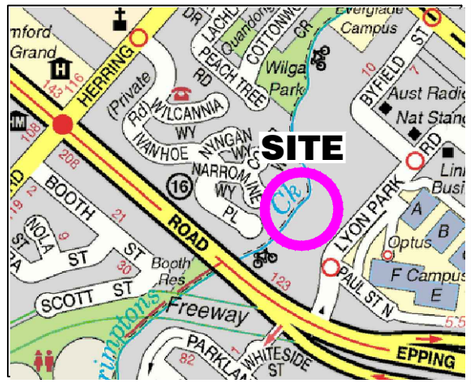

Locality Plan

LEGEND

- Existing retaining wall
- Test pit
- Shallow borehole
- Benkelman Bean test location
- Core borehole (2017)

Douglas Partners
Geotechnics / Environment / Groundwater

CLIENT: Frasers Property Ivanhoe Pty Ltd		TITLE: **Section Location Plan**	PROJECT No: 86043.02
OFFICE: Sydney	DRAWN BY: PSCH	**Proposed Road**	DRAWING No: 3
SCALE: 1:500@A3	DATE: 16.4.2018	**2-4 Lyonpark Road, MACQUARIE PARK**	REVISION: 0

ADW JOHNSON PTY LIMITED
ABN 62 129 445 398

Sydney
Level 35 One International Towers
100 Barangaroo Avenue
Sydney NSW 2000
Ph. 02 8046 7411
sydney@adwjohnson.com.au

Central Coast
5 Pioneer Avenue
Tuggerah NSW 2259
Ph. 02 4305 4300
Fax. 02 4305 4399
coast@adwjohnson.com.au

Hunter Region
7/335 Hillsborough Road,
Warners Bay NSW 2282
Ph. 02 4978 5100
Fax. 02 4978 5199
hunter@adwjohnson.com.au

Engineering

Working Beyond Expectations

Structural Report
Condition Assessment of Existing Retaining Wall

Property:
6-8 Lyonpark Road (Lot 62), Macquarie Park

Applicant:
Frasers Property Australia

Date:
1st June 2021

Revision:
A

Project Management • Town Planning • Engineering • Surveying
Visualisation • Social Impact • Urban Planning

www.adwjohnson.com.au

Document Control Sheet

Issue No.	Amendment	Date	Prepared By	Reviewed By
A	Issued to Frasers Property	1/06/2021	CB	BM

Limitations Statement

This report has been prepared in accordance with and for the purposes outlined in the scope of services agreed between ADW Johnson Pty Ltd and the Client. It has been prepared based on the information supplied by the Client, as well as investigation undertaken by ADW Johnson and the sub-consultants engaged by the Client for the project.

Unless otherwise specified in this report, information and advice received from external parties during the course of this project was not independently verified. However, any such information was, in our opinion, deemed to be current and relevant prior to its use. Whilst all reasonable skill, diligence and care have been taken to provide accurate information and appropriate recommendations, it is not warranted or guaranteed and no responsibility or liability for any information, opinion or commentary contained herein or for any consequences of its use will be accepted by ADW Johnson or by any person involved in the preparation of this assessment and report.

This document is solely for the use of the authorised recipient. It is not to be used or copied (either in whole or in part) for any other purpose other than that for which it has been prepared. ADW Johnson accepts no responsibility to any third party who may use or rely on this document or the information contained herein.

The Client should be aware that this report does not guarantee the approval of any application by any Council, Government agency or any other regulatory authority.

Table of Contents

1.0 BACKGROUND 1

1.1 Concept Design 2
1.2 Previous Studies 3

2.0 SITE INVESTIGATION 4

2.1 Site Observations 4
2.2 Site Investigation Summary 5

3.0 STABILITY OF THE RETAINING WALL IN ITS CURRENT CONDITION 7

4.0 IMPACTS ON THE STABILITY OF THE RETAINING WALL DUE TO THE PROPOSED ROAD CONSTRUCTION 9

4.1 Proximity of Excavation 9
4.2 Depth of Excavation 9
4.3 Impacts of Excavation Works 9

5.0 FINDINGS FROM THE PREVIOUS GEOTECHNICAL REPORTS BY DOUGLAS PARTNERS 10

6.0 RISK ASSESSMENT – ASSESSING RISK FOR FAILURE OF THE RETAINING WALL 13

6.1 Change of Environment for the Retaining Wall 13
6.2 Understanding the Risk Matrix – Assessment of Risk 13
6.3 Risk rating for the retaining wall in its current environment 14
6.4 Risk rating for the retaining wall for the proposed environment (after construction of the Link Road) 15

7.0 CONCLUSIONS 16

8.0 RECOMMENDATIONS 17

8.1 Excavation Works 17
8.2 Long Term 17

APPENDIX A

PHOTOS FROM SITE INVESTIGATIONS

APPENDIX B

ADW JOHNSON DRAWINGS 300001(1) – DA – 201/202

APPENDIX C

ENGINEERING SKETCH 300001-ESK-193(A)

LIST OF FIGURES

Figure 1: Site location
(basemap source: maps.six.nsw.gov.au)
Figure 3: Proposed Alignment of the Link Road (Road No. 1)
(located within 2R Lyonpark Road (Lot 100 in DP 1263727))
Figure 3: Risk Rating Matrix
Figure 4: Typical crib wall construction detail (courtesy of Concrib)

1.0 Background

The Frasers Midtown development is a mixed-use development that consists of private and social residential dwellings, seniors housing, retail and community uses and a new high school. Both the concept plan approval and Stage 1 Development were approved as State Significant Developments under SSDA's 8707 & 8903 respectively.

As part of Stage 1B of the development, it is proposed to provide a new public road link from the subject site through to Lyonpark Road to the south-east. The road link is required to be provided through the existing private property known as 2R Lyonpark Road, with upgrades to the existing carpark and basement accesses on 2 Lyonpark Road also to be undertaken as part of these works. The site location is shown in Figure 1 below.

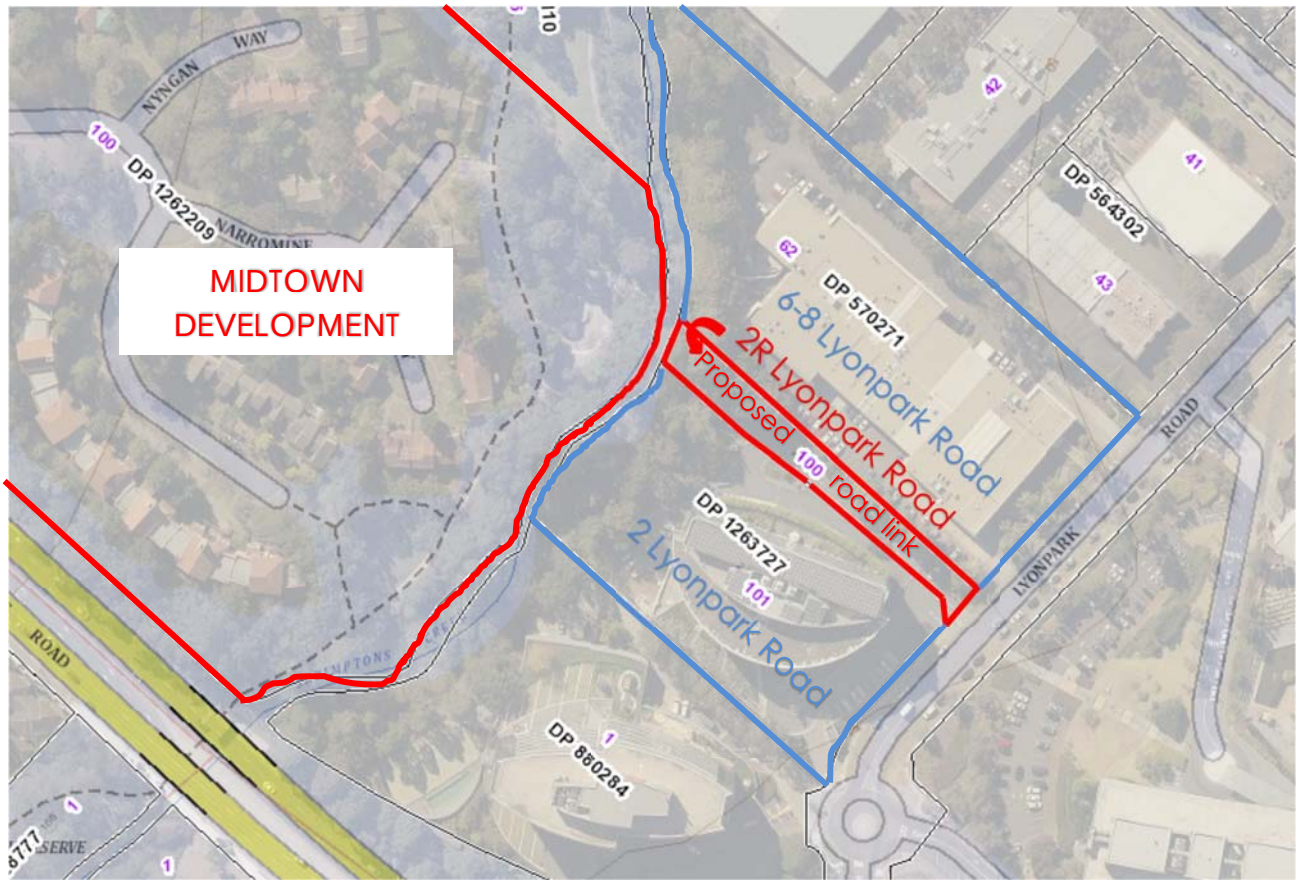

Figure 1: Site location
(basemap source: maps.six.nsw.gov.au)

An existing crib retaining wall that is in the ownership of the neighbouring property (6-8 Lyonpark Road), runs parallel to the northern boundary of the proposed road reserve. The proposed road alignment and wall location is indicated on the ADW Johnson Drawing 300001(1)-DA-202 (Refer to **Appendix B**) and in Figure 2 below.

The purpose and intent of this report is to provide commentary and recommendations to Frasers Property Australia (Frasers) for the following items –

- The current condition and observed structural stability of the retaining wall;
- Potential impacts on the stability of the retaining wall due to the expected excavation to be carried out to construct the proposed Link Road (Road No. 1);

- Assessment of the findings from the previous geotechnical reports carried out by Douglas Partners;
- Assessing the inherent risk in the event of failure of the retaining wall – for the current site conditions and proposed site conditions (after the construction of the access road);
- Assessing the potential for increased risk due to the changed environment in which the retaining wall will be located after the construction of the access road; and
- Provide recommendations moving forward based on the abovementioned assessments made.

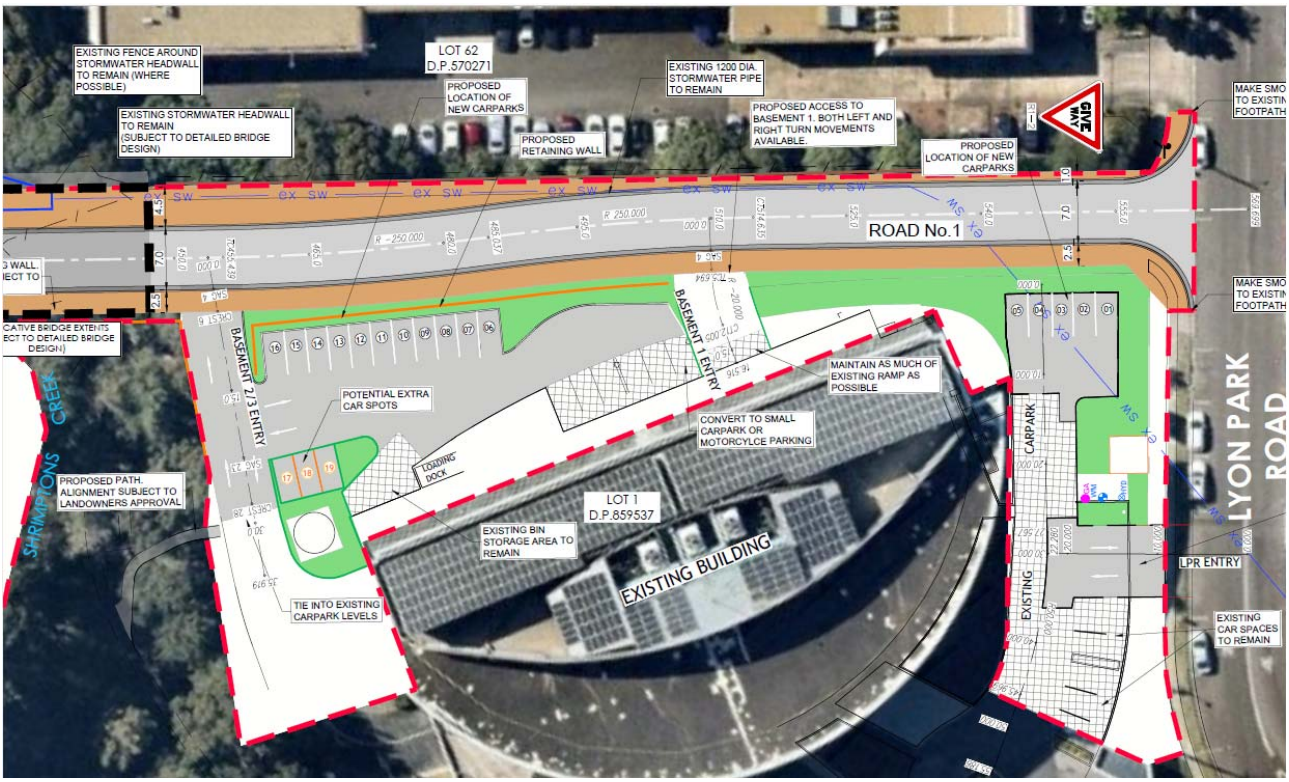

Figure 2: Proposed Alignment of the Link Road (Road No. 1)
(located within 2R Lyonpark Road (Lot 100 in DP 1263727))

1.1 Concept Design

A key element in the assessment of the existing retaining wall are the proposed levels of the Link Road in relation to the toe of the retaining wall. ADW Johnson has previously undertaken concept civil design works for the proposed road link to determine levels of both the finished surface and temporary excavation surface.

The proposed levels will be used in the assessment of the wall and are discussed further in section 4.

1.2 Previous Studies

We note that previous geotechnical investigation and reporting had been carried out by Douglas Partners (Report No's 2018-04-26_86043.02.R.001.Rev0 & 2018-04-26_86043.R.002.Rev0, hereafter referred to as Report 1 & Report 2 respectively). The reports comment on the current assessed stability of the retaining wall and the impact the proposed access road construction may have on the stability of the wall. Report 2 included a slope stability assessment for the retaining wall which provided a factor of safety (F.O.S) for stability of the wall for both the current site conditions and final proposed conditions after the construction of the Link Road. The findings of these geotechnical reports have been referred to further in Section 5 of this report.

2.0 Site Investigation

A site investigation was undertaken on the 31st March 2021 to gain an understanding of the current condition of the wall and to visually inspect any obvious factors that influence the condition of the wall.

2.1 Site Observations

The site investigation of the retaining wall involved walking the length of the wall and observing the condition of the wall in its current state. The site assessment also involved taking photographs and recording measurements for the obviously visible, readily accessible elements of the retaining wall. ADW Johnson was accompanied by personnel from Mainland Civil, who excavated two (2) small test pits while we were on site. The nominated locations of the test pits were determined on site, where it was readily accessible and physically possible to dig the test pits. These test pit locations are documented on ADW Johnson sketch ref: 300001 – ESK – 193A, included within **Appendix C** of this report. Photos for the observations noted below can be viewed in **Appendix A** of this report.

Upon assessment of the retaining wall, we observed the following –

1. The existing concrete crib wall is likely to be approximately 20+ years in age. The wall is approximately 80m in length and ranged in height from 1.0m (at the north east extent of the wall) to 1.8m at approx. mid length of the wall. See Photos 1-3.
2. The concrete crib wall appears to have been constructed by utilising concrete headers and front stretcher blocks, which is typical for segmental concrete crib walls. It was not able to be determined if the crib wall had been constructed with stretcher blocks installed to the rear of the wall as they were not able to be observed at the time of inspection, due to being buried within the backfill at the rear of the wall. The front face of the crib wall had an approximate 1H:4V backslope, which is a typical specification for crib walls. A typical construction configuration of a segmental concrete crib wall can be seen in Figure 4 in **Appendix A**.
3. Contrary to typical crib wall specification, no free draining granular material was observed within the segmental concrete elements of the wall. Rather, a clayey fill material was identified within the extents of the segmental concrete elements. Due to the wall being infilled with clayey fill, erosion of this fill has occurred in locations leaving localised voids within the segmental concrete elements of the retaining wall. See Photos 4-5.
4. Geofabric behind the crib wall was not able to be observed at the time of inspection.
5. The retaining wall was covered with a heavy vegetation which made visible assessment of the retaining wall difficult. As a result of this, full visual assessment of the retaining wall was not able to be achieved. See Photo 6.
6. Large trees were located in close proximity behind the retaining wall. This was typically more apparent towards the north-west extents of the retaining wall. The roots of these large trees have grown over and through the crib retaining wall. As a result of this, the segmental concrete elements of the retaining wall have been damaged and have dislodged at certain locations. It was also observed that some of these large trees were on a noticeable lean. See Photos 7-11.

7. Upon excavation of the test pits, TP01 and TP02, it was observed that the existing crib retaining wall appeared to be constructed on a concrete footing that was founded below the natural surface level. This was observed for both test pits excavated. The depths to the top of the apparent concrete footing from NSL were as follows– TP01 – approx. 600mm; TP02 – approx. 450mm. The soil in front of the toe of the retaining wall was a sandy fill material mixed with cobbles and roots and other organic matter. See Photos 12-14.

2.2 Site Investigation Summary

2.2.1 Infill Material

Upon site assessment of the crib retaining wall, it was observed that free draining granular material had not been used as an infill material for the wall. The use of a free draining granular infill material is the typical specification for crib walls. The purpose of the free draining granular material (as opposed to a clayey fill material) is to allow sub surface water within the backfill to pass through the wall. Additionally, the granular rock material will not erode over time (unlike the clayey fill material).

As the wall has not been built to typical crib wall specification utilising a granular free draining infill material, erosion of the clayey fill infill material has occurred. If further erosion of the infill material continues, this may affect the structural stability of the retaining wall in the future – refer to Section 3.

2.2.2 Existing Trees

The other noticeable observation were the large trees that were present behind the retaining wall (on the high side of the wall). The roots of these trees were growing over and through the wall and were structurally impacting the wall. This was particularly more observed for the north west extents of the retaining wall. Some of the large trees were also observed to be on a lean, which is likely due to the roots of the trees being poorly founded (particularly on the side adjacent to the retaining wall). This raises concern for the stability of such trees.

Although most of the larger trees were towards the north west extents of the retaining wall, there were smaller trees located in close proximity behind the retaining wall towards the other end of the wall. The concern here would be that these smaller trees would eventually grow to be as large as the other larger trees if not properly maintained.

The tree roots have the potential to cause localised deformation of the wall as the roots grow and expand. Due to the trees being in close proximity to the wall, the expanding roots will continue to grow hard up against and even through the wall, exerting increased localised pressure against the wall. The situation is worsened by the clayey infill (as opposed to granular infill), as the roots will be encouraged to grow through this material. Refer to Section 3 for further comments on the existing trees.

2.2.3 Footing Level

The excavated test pits identified that the base of the crib wall was embedded 450-600mm below the NSL (within the vicinity of the excavated test pits) and appeared to be constructed on a concrete footing. This is quite typical for crib wall construction (refer to typical crib wall construction detail in Figure 4 in **Appendix A**).

The purpose for embedding the base of the retaining wall below the ground surface is to allow the retaining wall to effectively 'key into' the soil foundation to provide additional resistance to prevent the wall from sliding. The embedment depth required for a specific crib wall is typically dependant on the effective height of the retaining wall, the specific foundation conditions that the base of the wall is founded in and the loading that would be imposed behind the wall (amongst other design parameters). This would be typically determined and specified by the retaining wall designer before the construction of the wall.

An embedment depth of 450-600mm is quite typical for crib wall construction (for walls similar in height and with similar loading requirements).

2.2.4 Assessed Condition of the Existing Crib Retaining Wall

It is ADW Johnson's opinion that, based upon the elements of the wall that could be visually assessed at the time of our site inspection, the overall condition of the crib retaining wall is assessed to be in **fair to poor** condition.

3.0 Stability of the Retaining Wall in its Current Condition

Determining the structural stability of the retaining wall from a theoretical perspective with any great certainty is a difficult exercise, primarily from the perspective that we have no access to existing structural drawings and have indeterminate information on the construction of the crib wall (particularly for the extent of the wall buried behind the backfill). Existing structural drawings for the retaining wall would have provided the necessary details and parameters to enable a design verification of the wall to be carried out. Likewise, as not all aspects of the retaining were able to be inspected, it is undetermined if the crib wall had been constructed to the correct specification. Therefore, a design assessment on the stability of the existing wall could not be carried out without outlining several design assessment assumptions. This has been the case for the slope stability assessment for the retaining wall that was carried out by Douglas Partners.

Due to the absence of necessary design information and having an incomplete understanding on the construction of the retaining wall, our assessment for the stability of the retaining wall was limited to visual observation only. This was based on observing the wall for evidence of existing movement /destabilisation.

The full extent of the retaining wall was not able to be inspected due to the heavy vegetation that was covering the wall. Therefore, confirming the condition of the wall for its full extent and observing all evidence for movement was not able to be fully understood. From what could be inspected, we made the following observations regarding the current stability of the wall (from the observations made in section 2 above)-

1. Deformation of the wall was observed typically where tree roots had grown through the wall. This had caused the segmental concrete elements to dislodge in localised areas (some elements of the wall had even completely dislodged and were laying on the ground at the toe of the wall). In many cases the retaining wall is supporting the large trees that exist behind the wall. This was typically more evident towards the north west extent of the wall (where the trees behind the wall were larger in size) and contributed to approximately 25% of the length of the wall (approximately 20m length).
2. For the remainder of the wall, (where there were no large trees located behind), the crib wall generally did not appear to be showing any indications of instability (for both sliding or overturning movements). In these areas, the wall structure appeared to be generally intact with no noticeable local deformation of the wall structure or structural failure of the concrete elements.
3. As the wall had not been infilled with free draining granular material (but rather with a clayey uncontrolled fill), erosion of the infill material has occurred leaving localised void pockets within the retaining wall. We note that continued erosion of the infill soil material within the crib wall may have an impact on the stability of the retaining wall throughout the future.

From our inspection of the retaining wall, we are of the opinion that the most significant contribution to the potential failure of the retaining wall is due to the impacting tree roots and large trees behind the wall. Although this was more for the case where there were larger trees located behind the wall (the NW extents of the wall), the smaller trees that are located behind the wall in other areas will continue to grow and may become problematic and pose an increased risk for failure of the wall in the future, if not properly maintained.

Based on the observations noted above, the following is a list of the potential modes of failure for the retaining wall that could occur. A likelihood rating for failure has been assigned for each failure mode to assist with enabling a risk rating (refer to Section 6):

1. Localised failure of the wall due to continued deterioration of the wall structure caused by the tree roots from the larger trees. (i.e. shear failure of the concrete segmental elements of the wall, causing the retained soil behind the wall to collapse) – **Likely**

2. Localised failure of the retaining wall caused by the large trees behind the wall collapsing– **Likely**

3. Instability of the wall caused by continued erosion of the infill material within the wall – **Unlikely (in the short-term case) / Likely (in the long-term case)**

Based on the abovementioned observations for the retaining wall, it is assessed that the likelihood for failure of the retaining wall for the overall case is **Likely (Refer to the Risk Matrix in Section 6).**

The previous geotechnical report carried out by Douglas Partners (report No. 2) carried out a slope stability assessment for the crib wall in its current condition. Further comments on the findings of this assessment have been provided in Section 5.

4.0 Impacts on the Stability of the Retaining Wall due to the Proposed Road Construction

The proposed Link Road has the potential to impact on the stability of the existing retaining wall through the required excavation works in the vicinity of the wall footing. The proximity and depth of the excavation are key to assessing the impacts.

4.1 Proximity of Excavation

Based upon the proposed road design alignment that has been prepared by ADW Johnson, the road will be aligned parallel to the existing wall at the SE extents of the wall (for a length of approximately 25m) before diverging away towards the northern end of the wall.

At the SE extents of the wall, the proposed kerb is approximately 1m from the face of the wall with this increasing to over 4m at the northern extent.

During the construction of the road, it is anticipated that a kerb track will be required to be constructed to facilitate the construction of the kerb. This will result in the temporary excavation being approximately 700mm from the face of the wall.

4.2 Depth of Excavation

Based upon the proposed road and verge design levels, the proposed finished verge surface level at the most SE extent of the retaining wall will be lowered approximately 400mm from NSL. The depth of cut to the finished surface tapers back to 0mm at the northern end of the wall.

A review of the Douglas Partners Report No.1 indicates that during the road 'box out', an additional 1m of depth should be allowed to remove and replace unsuitable subgrade. This will result in the temporary excavation being a maximum of 1.4m below natural surface levels (approximately 400mm below the existing toe level).

The proposed Link Road (Road No. 1) alignment relative to the wall and cut/fill heights for the proposed verge (adjacent to Road No.1) can be seen in ADW Johnson sketch ref: 300001 – ESK – 193 (A), included within Appendix C. The proposed road design level and indicative excavation levels relative to the toe and indicative footing levels for the retaining wall can be seen in ADW Johnson sketch ref: 300001 – ESK – 197 (A), included within **Appendix C**.

4.3 Impacts of Excavation Works

Reducing the embedment of the wall within the soil foundation, for both the temporary and long-term cases, has the potential to reduce the walls capacity to resist sliding forces, hence, affecting the overall stability of the wall.

Douglas Partners Report 2 had previously carried out a slope stability assessment for the wall for the current site conditions and due to the excavation proposed for the construction of the proposed access road. We have outlined the findings of this report further in Section 5.

It should be noted that the excavation works will have no impact on the other stability issues identified in Section 3 (tree roots, unsuitable infill material etc).

5.0 Findings from the previous Geotechnical reports by Douglas Partners

As noted in Section 1, two previous geotechnical reports had been prepared for the site by Douglas Partners in 2018. The details of these reports are as follows –

- **Douglas Partners Report 1** - Report No: 86043.02.R.001.Rev0 – Geotechnical Investigation – Proposed Road Development - Lyonpark Road, Macquarie Park - dated 23 April 2018
- **Douglas Partners Report 2** - Report No: 86043.02.R.002.Rev0 – Slope Stability Assessment of Existing Retaining Wall – Proposed Road Development - Lyonpark Road, Macquarie Park, dated 20 April 2018

Generally, the aim of the investigation outlined in Report 1 was to assess the existing condition of the Lyonpark Rd pavement, the paved roads within 2-4 Lyonpark Rd (now known as 2 & 2R Lyonpark Rd) (to assess the potential re-use of fill below the existing pavement) and to assess the foundation of the existing crib retaining wall in preparation for the following slope stability assessment report.

The aim of Report 2 was to assess the global stability of the retaining wall for the current site conditions and due to the excavation resulting from the construction of the proposed Link Road. The results of this report were used to support planning and the design of the proposed construction works associated with the Link Road. The global stability assessment outlined in Report 2 was based on the results of the geotechnical investigation of the wall footings that were assessed in Report 1, and should be read in conjunction with that report.

Report 1 involved a walk-over of the site and made general observations on the condition and features of the existing crib wall. Two notable test pits (labelled LP21 & LP22) were undertaken at the toe of the wall (LP21 at approximately Ch480 and LP22 at approximately CH525, relative to the proposed road chainages). Test pit LP21 identified shallow sandy filling over stiff/hard clay underlain by a shale foundation, which the retaining wall footing was founded on. The depth to the retaining wall footing at this location was found to be 0.5m.

Test pit LP22 identified the toe of the wall to be founded in deeper clayey sand fill material mixed with crushed sandstone, concrete and brick gravel cobbles (this soil material is consistent with what was identified during our site assessment). A cast-insitu concrete footing for the retaining wall was identified at 0.3m depth which was founded within the clayey sand filling.

Outlined in section 8.1.3 of DP report 1, the following conclusions were made –

- Excavations near the toe of the retaining wall may influence the bearing capacity, sliding resistance and global stability of the retaining wall and temporary excavation is proposed in order to carry out the proposed road construction works;
- Based on the retaining wall embedment's identified, excavations beyond one metre from the toe of the wall should have negligible influence on the sliding resistance of the wall;
- The anticipated excavation depth of up to approx. 0.6m (below foundation level), at 1m from the retaining wall is not expected to influence the bearing capacity of the retaining wall;

- Global stability may be influenced, and is separately considered in the Douglas partners supplementary report (Report 2); and
- Deeper or closer excavation than what is indicated above would require further assessment, but may be achievable. Alternatively, limited, local excavation approaches, such as 'hit-and-miss' panels may be appropriate for construction, depending on excavation and construction requirements. Alternatively, the wall may be anchored using soil nailing or 'tie-back' anchors.

Based on the finding of Report 1, supplementary Report 2 was prepared which carried out a slope stability assessment for the retaining wall for both the existing site conditions case and for the case where the proposed temporary excavation in front of the retaining wall will occur (during construction of the proposed road). The report presents results for the slope stability assessment at two separate locations (labelled as Chainage 480 and 510) in close proximity to where test pits LP21 and LP 22 were located. This was for the purpose of obtaining results for slope stability for the different wall embedment depths and soil foundation types that were identified at the test pits. Refer to Douglas Partners section location plan showing the locations of the test pits and locations for slope stability in **Appendix D**.

The slope stability assessment allowed for a minimum factor of safety (F.O.S) of 1.5 (for the existing condition) and 1.3 (for the temporary excavation case). The proposed geometry of the excavation in front of the retaining wall was altered as necessary to obtain this minimum F.O.S, or a depth of excavation of 1m (whichever case governed).

Several assumptions were adopted in the preparation of the geotechnical models (outlined in Section 3.4 of the report). Such assumptions include –

- The type and compaction of the material behind the wall;
- Unknown foundation conditions and wall embedment depths at locations along the wall other than what was identified at test pits LP21 & LP22;
- Unconfirmed information to the preferred approach to the general excavation works;
- Unconfirmed strength of materials at and below the foundation toe; and
- Unconfirmed condition of the retaining wall (given that the existing wall is largely obscured by vegetation).

Table 1 below, presents the F.O.S results based on the slope stability assessment.

Table 1 – Slope stability assessment results from Douglas Partners Report 2

F.O.S for the various cases at locations Ch510 & Ch480			
Assessment location	**Existing site conditions**	**Temporary excavation (with berm in front of retaining wall)**	**Temporary excavation (with batter in front of retaining wall – no berm)**
Ch510	1.5 (OK) – (case 1)	F.O.S of 1.3 achieved for excavation of 1m wide berm then battered at 2H:1V to 1m depth – (case 2)	F.O.S of 1.3 achieved for excavation to (max) 0.3m depth at 7H:1V (batter) – (case 3)
Ch480	1.5 (OK) – (case 4)	F.O.S of 1.3 achieved for excavation of 1m wide berm then battered at 1.5H:1V to 1m depth – (case 5)	F.O.S of 1.3 achieved for excavation to (max) 1m depth at 2.5H:1V (batter) – (case 6)

An extract from the Douglas Partners Report showing the results from the slope stability assessment can be referred to in **Appendix D**.

Based on the results from the report, it can be seen that open excavation in front of the retaining wall is relatively sensitive to small variations in excavation geometry and, therefore, significantly reduces the stability F.O.S. This is particularly the case at Ch510, which was very sensitive to the excavated shape in front of the retaining wall (this case has modelled the retaining wall to be founded on granular material rather than cohesive clay)

Generally, the requirement to 'box-out' the full 1m excavation depth for the entire extent of the proposed road width (to allow removal of the existing 'uncontrolled' fill, compact the existing subgrade and allow the placement and compaction of engineered fill) would not be permissible based on the geometric constraints provided by Douglas Partners to maintain a temporary F.O.S of 1.3.

The minimum verge width that would be required to achieve a 1m deep excavation depth (for the road construction) would be for cases 5 & 6 where a total berm/batter width of 2.5m would be required in front of the wall before the 1m excavated depth was achieved. For Case 2 this dimension would be 3m. Case 3 allows for a maximum excavation depth of only 0.3m.

Given this, Douglas Partners have given the following concessions if deeper or closer excavation is required –

- Due to the relative sensitivity to excavation geometry, further assessment would be warranted if deeper excavation is proposed over a significant area;
- Deeper and closer excavation (would be acceptable even in the modelled ground conditions if subject to additional measures, such as the use of a 'hit-and-miss' construction sequencing with panel width limits to say, 5m, to provide support to the wall; and
- Further verification of the abovementioned assumptions and subsequent re-analysis may allow more extensive excavation to occur more readily across part of the excavation length.

Report 1 also noted that if excavation profiles were closer or deeper than the geometric constraints provided in the report, the wall may be anchored using soil nailing or 'tie-back' anchors to ensure stability of the wall whilst the road excavation works is being carried out. Alternatively, shoring piles may be installed in front of the wall prior to ensure stability of the wall upon excavation for the road.

6.0 Risk Assessment – Assessing Risk for failure of the retaining wall

6.1 Change of Environment for the Retaining Wall

Currently, the retaining wall is located in an environment with relatively low pedestrian and vehicular traffic flows. To the retained (high) side of the wall exists a low volume/traffic flow driveway/carpark located on property 6-8 Lyonpark Rd (Lot 62 in DP 570271). The carpark on the high side of the wall is located within 1m from the top of the wall.

On the low side of the retaining wall exists a low volume/traffic flow carpark/driveway located on 2 & 2R Lyonpark Rd (Lots 100 & 101 in DP 1263727). This carpark/driveway is separated from the retaining wall by a vegetated verge of varying width, ranging from 3-8m. The existing driveway for the development allows access to the external carpark spaces (approximately 27 external carpark spaces), as well as access to the underground carpark basement levels.

The proposed Link Road will provide access to and from Frasers Midtown development and it is therefore expected that the vehicular traffic will be significantly greater than what is currently experienced within the carpark. The carriageway of the road will also be located much closer to the wall than the existing carpark / driveway.

Due to the proposed change in environment in which the retaining wall will be situated, there is concern for increased risk to vehicular and pedestrian traffic along the Link Road within the vicinity of the existing retaining wall in the event that the retaining wall fails. Reference is made to the risk matrix detailed in Section 6.2 below, which illustrates how a risk rating is formulated based on the likelihood and severity of an event.

6.2 Understanding the Risk Matrix – Assessment of Risk

The risk matrix (see Figure 3 overleaf) has been created to determine potential inherent risks for particular events based on the likelihood and severity of that event. Typically, the greater the likelihood and severity for a particular event, the higher the potential inherent risk rating will be. Based on the risk rating that is determined, various levels of controls and/or corrective actions can then be proposed to take effect to mitigate the risks and effectively lower the risk rating to achieve a residual risk rating.

Sections 6.3 and 6.4 below outline the expected risk ratings for both the current environment (retaining wall in a low traffic volume driveway/carpark environment) and for the proposed long-term environment (after construction of the proposed access road).

RISK RATING MATRIX						
SEVERITY			LIKELIHOOD			
LEVEL	DESCRIPTIVE	OUTCOMES	A	B	C	D
			IMMINENT	VERY LIKELY	LIKELY	UNLIKELY
I	Catastrophic	Death, permanent disability, huge financial loss, could lead to closure of the business	1	1	2	3
II	Critical	Lost-time injuries, major financial loss, major disruption to business activities	1	2	3	4
III	Marginal	Medical treatment or first-aid treatment required, moderate financial loss, disruption to a job	2	3	4	5
IV	Warning	No injury, illness or property damage, nuisance interruption, low financial loss, minor breakdown that can be fixed immediately	3	4	5	6

RISK LEVEL

1 Very high risk, consider discontinuing activity until hazard eliminated or appropriate controls are implemented
2 High risk, immediate corrective action required to reduce risk
3 Substantial risk, correction required
4 Moderate risk, need for attention indicated
5 Low priority risk, do something when possible
6 Low risk, risk perhaps acceptable, monitor as appropriate

Figure 3: Risk Rating Matrix

6.3 Risk rating for the retaining wall in its current environment

Based on the current condition of the retaining wall, it was assessed that the likelihood for failure of the retaining wall for the overall case is **Likely (in Section 3 of this report).**

The level of severity for failure of the retaining wall is based on the following considerations:

- The observed traffic activity that utilises the existing driveway of 2/2R Lyonpark Road whilst carrying out our site investigation (carried out at approximately midday on a week day);
- The expected traffic activity that would utilise the existing driveway of 2/2R Lyonpark Road based on the current external and basement carpark capacities;
- The number of anticipated persons that would be located on the driveway at any given time that could be impacted by failure of the retaining wall;
- The clearance (verge width) between the driveway and the retaining wall (approx. 3-8m); and

- The number of anticipated pedestrians within close proximity to the retaining wall that could be impacted by failure of the retaining wall at the time of failure – typically within driveway extents (approx. 3-8m away);

Based on the abovementioned considerations, we assessed the severity rating for failure of the retaining wall to be **Marginal** for the current site conditions**.**

Based on the likelihood and severity outlined above, the potential for inherent risk (based on the risk rating matrix) is determined to be **Moderate risk** for the event of failure of the retaining wall in the current environment.

6.4 Risk rating for the retaining wall for the proposed environment (after construction of the Link Road)

Based on the current condition of the retaining wall, it was assessed that the likelihood for failure of the retaining wall for the overall case is **Likely (in Section 3 of this report).**

The level of severity for failure of the retaining wall is based on the following considerations:

- The increased anticipated traffic activity along the proposed Link Road (located through 2R Lyonpark Road) based on the expected number of vehicles utilising the road from Frasers Midtown development;
- The reduced clearance (verge width) between the Link Road and the retaining wall (approx. 1-4m); and
- It is noted that the likelihood of pedestrians being impacted by the retaining wall for the proposed site conditions (after construction of the Link Road) is considered to be Low due to the intention to direct pedestrian traffic to the southern side of the Link Road ;

Based on the abovementioned considerations, we assessed the severity rating for failure of the retaining wall to be **Critical/Catastrophic.**

Based on the likelihood and severity outlined above, the potential for inherent risk (based on the risk rating matrix) is determined to be **Substantial/High risk** for the event of failure of the retaining wall in the proposed environment.

Note: For the purpose of obtaining comparable risk ratings for the current and proposed environment conditions, the above-mentioned ratings do not take into consideration the potential for loss (death/injury/financial/infrastructure loss) for the property at 6-8 Lyonpark Road. The potential for loss impacting 6-8 Lyonpark Road would be consistent for the current and proposed environment cases.

7.0 Conclusions

From our site assessment of the retaining wall and as noted in the abovementioned sections of this report, we outline the following conclusions:

1. The overall condition of the retaining wall was assessed to be in **fair to poor** condition. This was particularly due to the large trees present behind the retaining wall that were structurally impacting the wall;
2. The likelihood for failure of the retaining wall was assessed to have the rating of **Likely**. This was primarily due to the large trees that were located behind the retaining wall that were structurally impacting the wall as well as taking into consideration the noticeable lean on these trees;
3. Based on the results from the Douglas Partners slope stability assessment, open excavation in front of the retaining wall is relatively sensitive to small variations in excavation geometry and, therefore, significantly reduces the stability F.O.S;
4. Generally, the requirement to 'box-out' the full 1m excavation depth for the entire extent of the proposed road width would not be permissible based on the geometric constraints provided by Douglas Partners (to maintain a temporary F.O.S of 1.3) and therefore the geometric excavation restraints would need to be adhered to (without further assessment);
5. Douglas Partners have given several concessions to enable deeper or closer excavations (beyond their initial recommendations) such as utilising hit-and-miss panel sequencing excavation, tie back anchoring of the retaining wall or re-analysis (following verification of assumptions) to allow more extensive excavation to occur more readily across the excavation length;
6. **The provision of the Link Road, including excavation works (subject to being undertaken in accordance with the Douglas Partners advice), will generally not adversely impact on the long-term stability of the wall. However, it is recommended that Douglas Partners provide additional advice regarding the area of the wall where the final road level will remain 400mm below the NSL.**
7. The proposed Link Road adjacent to the retaining wall will change the environment that the wall is situated in from a low volume traffic and pedestrian flow driveway to a higher volume traffic/pedestrian flow road environment. The proposed road is also typically closer to the existing retaining wall than the current driveway. This inherently raises the risk rating in the event of the retaining wall failing (due to the higher severity rating);
8. The risk rating for failure of the retaining wall in the current environment was assessed to be of **Moderate risk**; and
9. The risk rating for failure of the retaining wall in the proposed environment (during operation the operation of the access road) was assessed to be **Substantial/High risk.**

8.0 Recommendations

As mentioned in the sections above, the stability of the wall and the risk rating for failure must be considered during both the excavation works and the long-term scenario.

It is noted that the wall is currently in a fair to poor condition and that the provision of the Link Road will not adversely impact on the condition of the wall. The provision of the Link Road will however potentially increase the severity of the consequences should the wall fail.

The following recommendations are provided for each stage:

8.1 Excavation Works

The following recommendations relate to the excavation works:

- Where possible excavation proximity / depths are to be in accordance with the recommendations identified within the Douglas Partners Report 2;
- Where closer and/or deeper excavations are required, hit and miss panels of no more than 5m are to be adopted;
    - Based upon our assessment this is likely to be applicable in the SE extents of the wall only;
- It is recommended that Douglas Partners provide additional advice regarding the area of the wall where the final road level will remain 400mm below the NSL (as this excavation case scenario was not assessed in Douglas Partners Report 2).
- Minimise the use of vibrating machinery in the vicinity of the wall;
- A qualified geotechnical engineer should be present during excavation works to both assess the stability of the wall and to assess the need to over excavate unsuitable fill material
    - Should over excavation not be required than this would be preferable; and
- The neighbouring property should be advised of works and, if practical, the parking spaces above the wall blocked off during the works.

8.2 Long Term

The following recommendations relate to the long-term life of the wall:

- Provide specific detailing on the proposed documentation for the Link Road to show no pedestrian path on the northern side of the Link Road (within the proximity of the existing retaining wall) and rather detailing for pedestrian traffic to be directed to the southern side of the Link Rd.
- Landscape screening walls could potentially be used as a 'safety net' should the wall fail;
- **It is highly recommended that the owner of 6-8 Lyon Park Road reconstructs or provides further stabilisation measures for the wall; and**
- **It is highly recommended that the owners of 6-8 Lyon Park Road remove or maintain the size of the trees immediately behind the retaining wall to prevent further deterioration of the wall.**

Appendix A

FIGURE 4/PHOTOGRAPHS FROM SITE INVESTIGATION

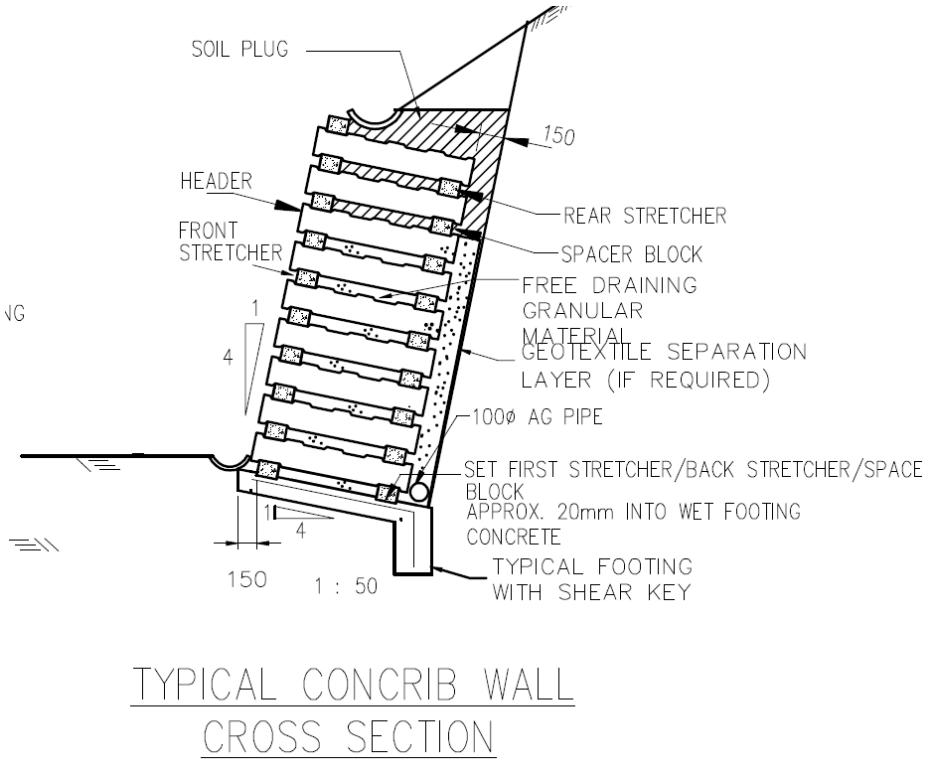

FIGURE 4: TYPICAL CRIB WALL CONSTRUCTION DETAIL (COURTESY OF CONCRIB)

PHOTO 1

PHOTO 2

PHOTO 3

PHOTO 4

PHOTO 5

PHOTO 6

PHOTO 7

PHOTO 8

PHOTO 9

PHOTO 10

PHOTO 11

PHOTO 12 – TEST PIT 01 (TP01)

PHOTO 13 - TEST PIT 01 (TP01)

PHOTO 14 - TEST PIT 02 (TP02)

Appendix B

ADW JOHNSON DRAWINGS 300001(1) – DA – 201/202

300001(1)-DA-201

DETAIL PLAN
SCALE 1:1000

LEGEND

- SITE BOUNDARY
- STAGE 1B BOUNDARY
- PROPOSED LOT BOUNDARY
- EXISTING LOT BOUNDARY
- MAJOR CONTOURS
- MINOR CONTOURS
- PROPOSED KERB
- PROPOSED PUBLIC VERGE AREA
- PROPOSED PRIVATE VERGE AREA
- PROPOSED PAVEMENT
- PROPOSED KERB
- BUILDING LAYOUT
- INDICATIVE RAISED THRESHOLD

NOTE:
1. REFER TO ARCHITECTS DRAWINGS FOR WORKS OUTSIDE OF ROAD RESERVE.
2. REFER TO LANDSCAPE PLANS PREPARED BY HASSEL STUDIOS FOR PROPOSED VERGE SURFACE TREATMENTS AND RAISED THRESHOLD DETAILS.
3. BUILDINGS SHOWN INDICATIVELY ONLY. REFER TO ARCHITECTS DRAWINGS
4. PARKING SIGNS ARE SHOWN INDICATIVELY ONLY. FINAL SIGNAGE TO BE DETERMINED IN CONJUNCTION WITH COUNCIL.

ver.	date	comment	drawn	pm	level information	scale (A3 original size)	notes
E	09.09.19	UPDATED LAYOUT	PB	BM	DATUM: N/A CONTOUR INTERVAL: 1.0m	0 25 50m SCALE: 1:1000 (FULL)	

drawing title:
DETAIL PLAN
STAGE 1B

location: HERRING RD & EPPING RD, MACQUARIE PARK
council: RYDE CITY COUNCIL
dwg ref: 300001(1)-DA-201
client: ASPIRE

adw johnson
central coast office ph: (02) 4305 4300
hunter office ph: (02) 4978 5100
sydney office ph: (02) 8046 7411
www.adwjohnson.com.au

working beyond expectations

• project management • civil engineering • infrastructure • superintendency • economic analysis • social impact • town planning • surveying • development feasibility • visualisation • urban design

Plotted By: Patrick Buscombe, Plot Date: 09/09/19 1:50:26PM Cad File: S:\300001\DRAWINGS\PLANNING\DA SET\STAGE 1\300001(1)-DA-201.DWG
This plan includes coloured information. If you have a black and white copy you do not have all of the information. This note is coloured RED.
Copyright Notice: This plan and the information it contains are copyright and remain the property of ADW Johnson Pty Ltd. ADW Johnson Pty Ltd grants to the client named on this plan a license to use the information hereon for the purpose for which we were engaged to perform the work. Use of the plan and information it contains for any other purpose is not permitted unless prior written approval has been obtained from ADW Johnson Pty Ltd.

300001(1)-DA-202

FOR CONTINUATION
REFER SHEET 201

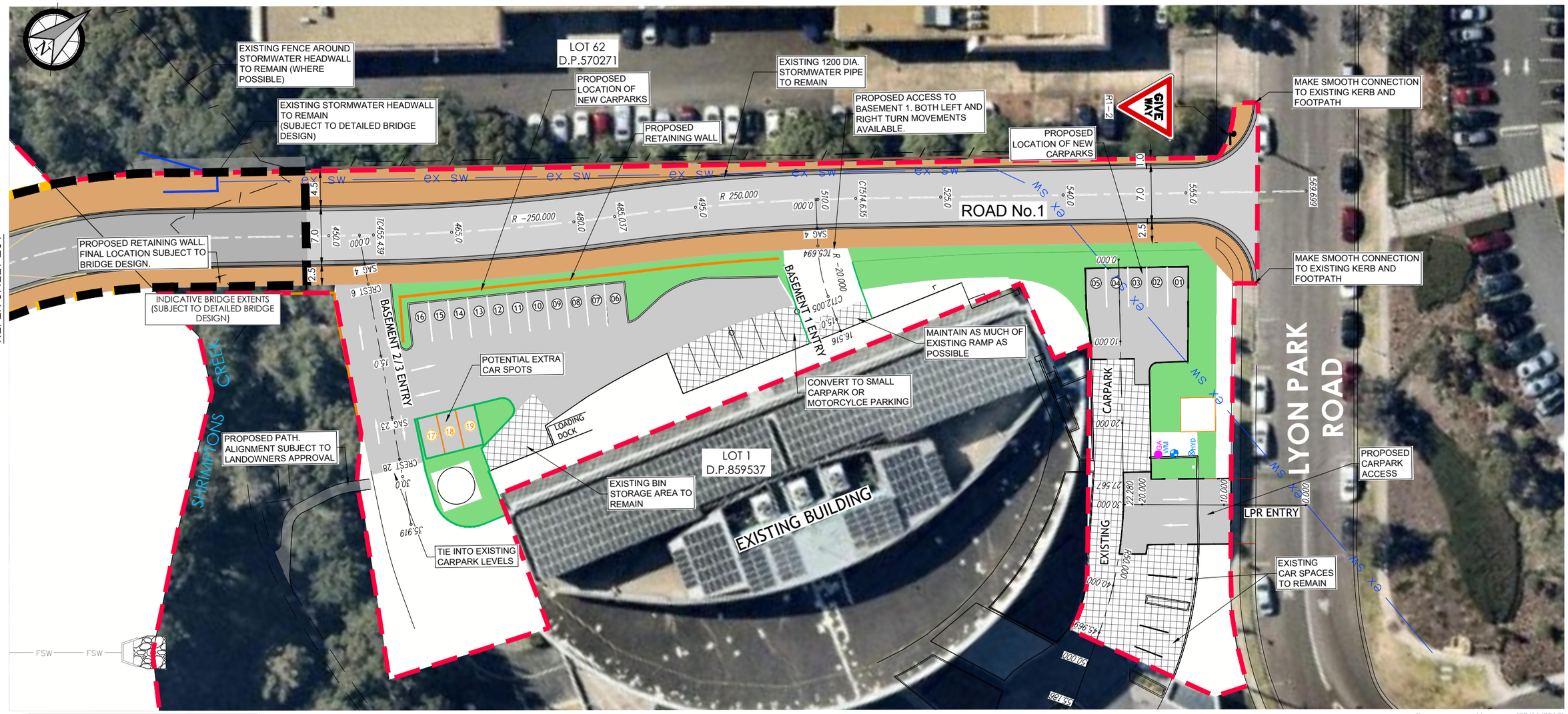

*image source: Nearmap (20/11/2017)

LEGEND

- SITE BOUNDARY
- STAGE 1B BOUNDARY
- PROPOSED LOT BOUNDARY
- EXISTING LOT BOUNDARY
- EXISTING FENCE
- EXISTING RETAINING WALL
- PROPOSED RETAINING WALL
- MAJOR CONTOURS
- MINOR CONTOURS
- PROPOSED KERB
- EXISTING STORMWATER
- PROPOSED VERGE AREA
- PROPOSED PAVEMENT
- PROPOSED KERB
- EXISTING CARPARK TO REMAIN
- PROPOSED CARPARK
- POTENTIAL EXTRA CARPARK

NOTE:
1. ROAD 1 FINAL ALIGNMENT SUBJECT TO FURTHER GEOTECHNICAL INVESTIGATION AND DETAILED DESIGN.

DETAIL PLAN
SCALE 1:500

ver.	date	comment	drawn	pm	level information	scale (A3 original size)	notes
E	09.09.19	UPDATED LAYOUT	PB	BM	DATUM: N/A CONTOUR INTERVAL: 0.5m	0 12.5 25.0m SCALE: 1:500 (FULL)	

drawing title:
DETAIL PLAN - LYON PARK ROAD EXTENSION STAGE 1B

location: HERRING RD & EPPING RD, MACQUARIE PARK

council: RYDE CITY COUNCIL

dwg ref: 300001(1)-DA-202

client: ASPIRE

adw johnson
central coast office ph: (02) 4305 4300
hunter office ph: (02) 4978 5100
sydney office ph: (02) 8046 7411
www.adwjohnson.com.au

• project management • civil engineering • infrastructure • superintendency • economic analysis • social impact • town planning • surveying • development feasibility • visualisation • urban design

working beyond expectations

Plotted By: Patrick Buscombe Plot Date: 09/09/19 1:50:36PM Cad File: S:\300001\DRAWINGS\PLANNING\DA SET\STAGE 1\300001(1)-DA-202.DWG
This plan includes coloured information. If you have a black and white copy you do not have all of the information. This note is coloured RED.
"Copyright Notice" This plan and the information it contains are copyright and remain the property of ADW Johnson Pty Ltd. ADW Johnson Pty Ltd grants to the client named on this plan a license to use the information hereon for the purpose for which we were engaged to perform the work. Use of the plan and information it contains for any other purpose is not permitted unless prior written approval has been obtained from ADW Johnson Pty Ltd.

Appendix C

ENGINEERING SKETCH 300001 – ESK – 193(A) & 197(A)

300001-ESK-193[A]

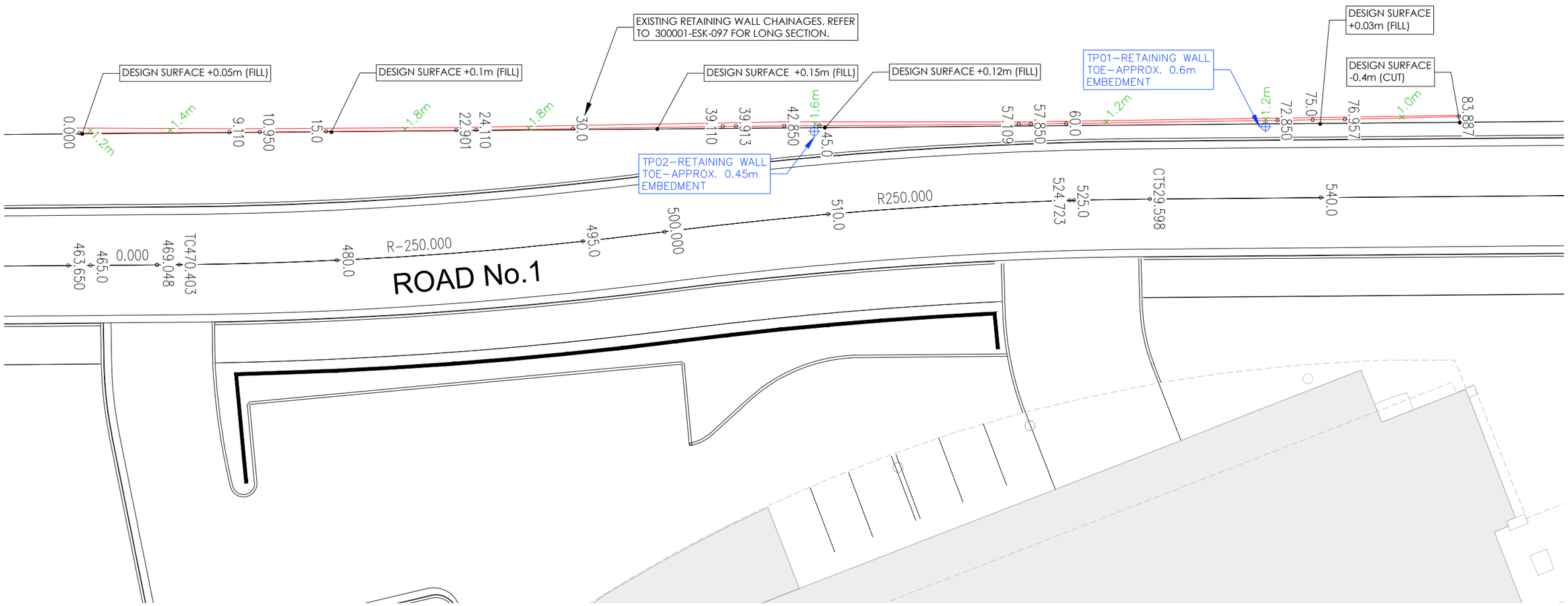

EXISTING WALL PLAN

SCALE 1:125

MGA

LEGEND

- PROPOSED LOT BOUNDARY
- EXISTING LOT BOUNDARY
- PROPOSED KERB
- ×1.0m APPROXIMATE EXISTING RETAINING WALL HEIGHT
- TEST PIT LOCATIONS
- PROPOSED RETAINING WALL
- EXISTING RETAINING WALL (TOE ALIGNMENT)

NOTE:

REFER TO 300001–ESK–197 FOR EXISTING RETAINING WALL LONG SECTION.

ver.	date	comment	drawn	pm	level information	scale (A1 original size)	notes
A	28.05.2021	INITIAL ISSUE	JJ	MO	DATUM: N/A CONTOUR INTERVAL: N/A	A1 1:125 0 2.0 4.0 6.0m A3 1:250	

drawing title:

RETAINING WALL PLAN

location: IVANHOE ESTATE

council: RYDE

dwg ref: 300001-ESK-193

client:

ASPIRE

adw johnson

central coast office ph: (02) 4305 4300
hunter office ph: (02) 4978 5100
sydney office ph: (02) 8046 7411
www.adwjohnson.com.au

• project management • civil engineering • infrastructure • superintendency • economic analysis • social impact • town planning • surveying • development feasibility • visualisation • urban design

working beyond expectations

Plotted By: Bill Shaw Plot Date: 01/06/21 4:46:06PM Cad File: S:\300001\DRAWINGS\GENERAL\300001-ESK-193[A].DWG

This plan includes coloured information. If you have a black and white copy you do not have all of the information. This note is coloured RED.

Copyright notice: This plan and the information it contains are copyright and remain the property of ADW Johnson Pty Ltd. ADW Johnson Pty Ltd grants to the client named on this plan a license to use the information herein for the purpose for which we were engaged to perform the work. Use of the plan and information it contains for any other purpose is not permitted unless prior written approval has been obtained from ADW Johnson Pty Ltd.

300001-ESK-197 [A]

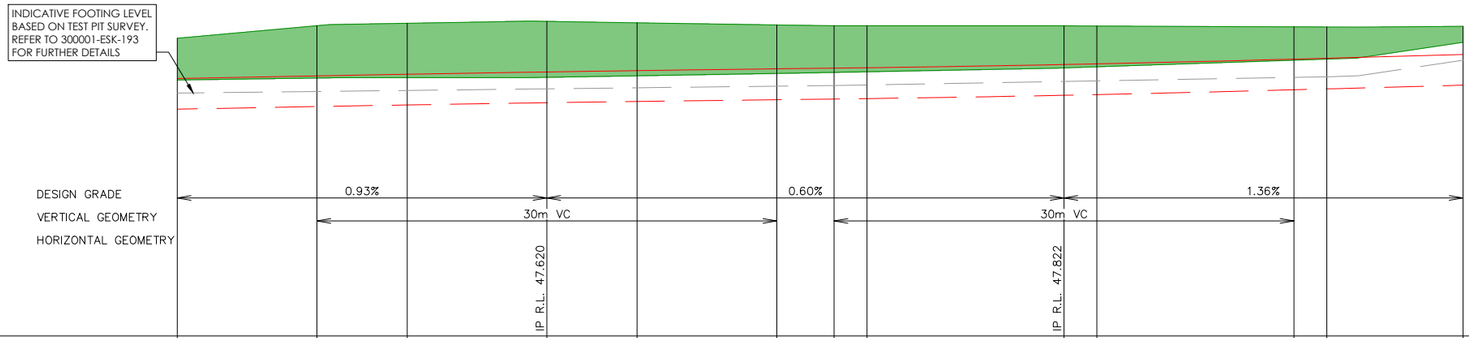

DATUM 39.0

DESIGN VERGE LEVEL	47.39	47.48	47.53	47.61	47.65	47.71	47.73	47.75	47.85	47.87	48.03	48.06	48.18
INDICATIVE ROAD EXCAVATION LEVEL	46.39	46.48	46.53	46.6	46.65	46.7	46.72	46.74	46.85	46.87	47.03	47.06	47.18
EXISTING WALL TOP LEVEL	48.71	49.12	49.2	49.26	49.21	49.14	49.11	49.11	49.11	49.11	49.08	49.07	49.09
EXISTING WALL TOE LEVEL	47.35	47.41	47.43	47.44	47.49	47.56	47.6	47.62	47.74	47.78	47.99	48.02	48.57
CUT\FILL (DESIGN VERGE LEVEL TO EXISTING WALL TOE)	0.05	0.07	0.11	0.17	0.17	0.15	0.14	0.13	0.11	0.1	0.04	0.03	−0.4
CHAINAGE	0	9.11	15	24.11	30	39.11	42.85	45	57.85	60	72.85	75	83.89

LONGITUDINAL SECTION – EXISTING RETAINING WALL

HORIZONTAL SCALE 1:200
VERTICAL SCALE 1:100

ver.	date	comment	drawn	pm	level information	scale (A1 original size)	notes
A	28.05.2021	INITIAL ISSUE	JJ	CB	DATUM: N/A CONTOUR INTERVAL: N/A		

drawing title:

EXISTING RETAINING WALL LONGSECTION

location: IVANHOE ESTATE

council: RYDE

dwg ref: 300001-ESK-197

client:

ASPIRE

adw johnson
central coast office ph: (02) 4305 4300
hunter office ph: (02) 4978 5100
sydney office ph: (02) 8046 7411
www.adwjohnson.com.au

• project management • civil engineering • infrastructure • superintendency • economic analysis • social impact • town planning • surveying • development feasibility • visualisation • urban design

working beyond expectations

Plotted By: Jacob Jackson Plot Date: 02/06/21 8:03:53AM Cad File: S:\300001\DRAWINGS\GENERAL\300001-ESK-197 [A].DWG
This plan includes coloured information. If you have a black and white copy you do not have all of the information. This note is coloured RED.
Copyright Notice This plan and the information it contains are copyright and remain the property of ADW Johnson Pty Ltd. ADW Johnson Pty Ltd grants to the client named on this plan a license to use the information hereon for the purpose for which we were engaged to perform the work. Use of the plan and information it contains for any other purpose is not permitted unless prior written approval has been obtained from ADW Johnson Pty Ltd.

Appendix D

DOUGLAS PARTNERS SECTION LOCATION PLAN AND SLOPE STABILITY ASSESSMENT RESULTS

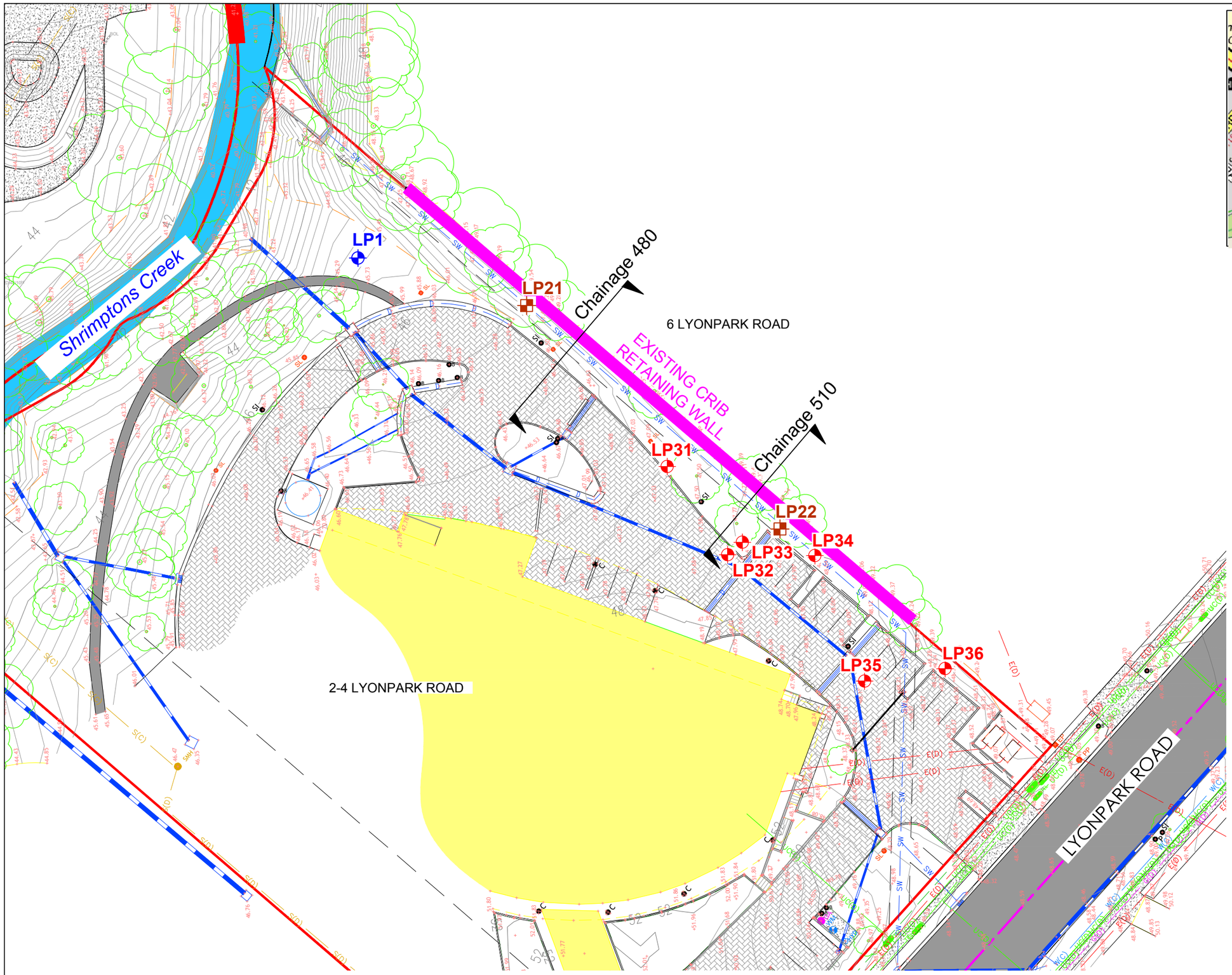

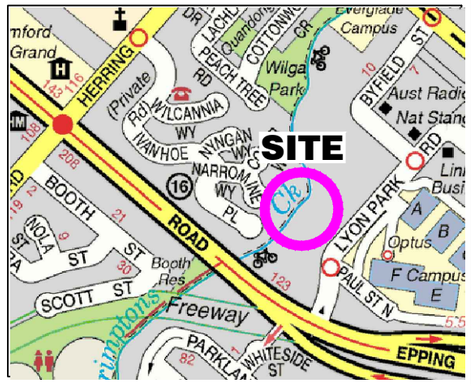

Locality Plan

LEGEND

- Existing retaining wall
- Test pit
- Shallow borehole
- Benkelman Bean test location
- Core borehole (2017)

Douglas Partners
Geotechnics / Environment / Groundwater

CLIENT: Frasers Property Ivanhoe Pty Ltd		TITLE: **Section Location Plan**	PROJECT No: 86043.02
OFFICE: Sydney	DRAWN BY: PSCH	**Proposed Road**	DRAWING No: 3
SCALE: 1:500@A3	DATE: 16.4.2018	**2-4 Lyonpark Road, MACQUARIE PARK**	REVISION: 0

3.3 Results

The results of the analysis are summarised in Table 1, below.

Table 1: Results of Analysis

Case	Result	Comment
1 - Ch510 Check on Existing FOS	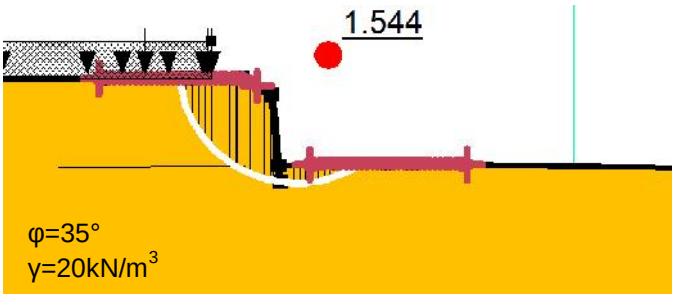	Resulting FOS = 1.5 (OK)
Case 2 – Ch 510 Excavation (berm) case	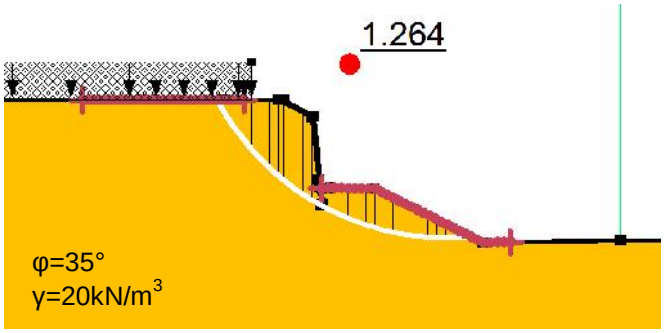	FOS of 1.3 achieved for excavation from 1 m distance, (ie 1 m berm) then battered at 2H:1V to 1 m depth
Case 3 – Ch 510 Excavation (no berm) case	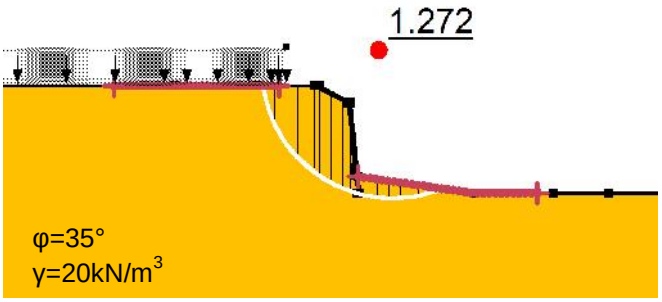	FOS of 1.3 achieved for excavation to (max) 0.3 m depth, at 7H:1V (no berm)
Case 4 – Ch 480 Check on existing case	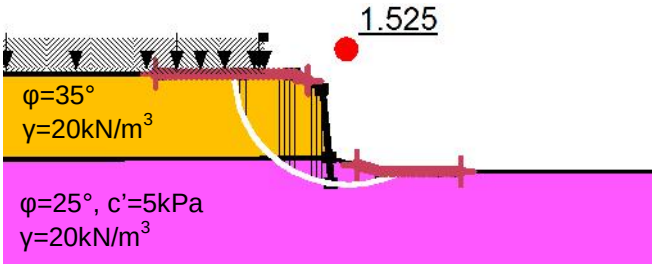	FOS is 1.5 (OK)

Case	Result	Comment
Case 5 – Ch 480 Excavation (berm) case	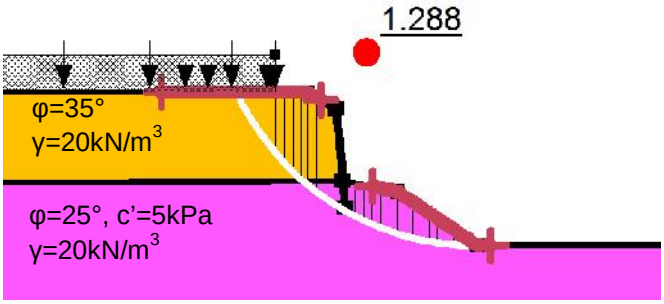	FOS of 1.3 achieved for excavation from 1m distance, then battered at 1.5(H):1(V) to 1m depth
Case 6 – Ch 480 Excavation (no berm) case	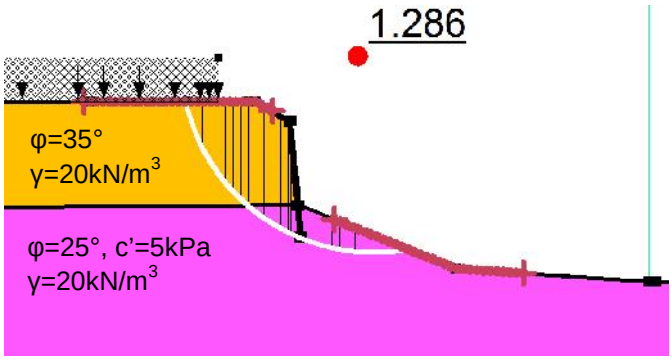	FOS is 1.3 with excavation at 2.5H:1V to 1 m depth

The analysis at Chainage 510 indicates that the retaining wall founded on granular material is very sensitive to excavation below the toe level, with a relatively flat slope allowing only limited excavation to toe level. The use of a 1 m wide berm, allows for a 2H:1V batter for excavation to 1 m depth (per Case 2). By comparison, without a berm, a relatively flat 7H:1V batter is required for excavation to only 0.3 m depth. The resistance against global stability failure in granular materials is due to friction developed from the weight of soil on the passive (downslope) side of the retaining wall, and the difference in volume (proportional to weight) of this resisting material for slopes with and without a berm can be seen in the figures presented in Table 1 for Cases 2 and 3, respectively.

The analysis at the intermediate chainage indicates that the wall with greater toe depth, in clay, is less sensitive to the excavation profile, and steeper batters are achievable, as shown in the "Comments" column of Table 1 (ie 1.5H:1V batter at 1 m from the wall, or 2.5H:1V from the wall, both to 1 m depth.

3.4 Further Comments

The above analysis indicates likely excavation limits for extensive, open excavation in front of the retaining wall, based on the existing information. The following is noted:

- The above analysis is relatively sensitive to small variations in excavation geometry, and further assessment may be warranted if deeper excavation is proposed over a significant area. Accidental over-excavation has not been considered and should be backfilled immediately, unless otherwise advised by a geotechnical professional.

Long Service Corporation

7 September 2020

FRASERS PROPERTY IVANHOE P/L
PO BOX 3307
RHODES NSW 2138

Levy Receipt

Receipt No.
00441550

Received from: (Name of person or organisation paying for levy)

FRASERS PROPERTY IVANHOE P/L

the amount of

$108,329.00

Payment details:

Cheque	**110796**	**$108,329.00**	**FRASERS PROPERTY AHL LIMITED**

being payment for Long Service Levy as detailed below

Levy Payment Form number	0359971
Council/Department/Authority	RYDE COUNCIL, CITY OF
C.C. Number	SSD 8903
Work address	LOT 100 DP1262209
	1 IVANHOE PLACE
	MACQUARIE PARK NSW 2113
Estimated value of work	$30,951,250.00
Levy payable (No exemption)	**$108,329.00**
Total levy paid	**$108,329.00**
Credit Card Surcharge (non-refundable)	**$0.00**
Total Amount Paid	**$108,329.00**

Signed: (Signature of authorised person)

Date
7/9/2020

454584

DocuSign Envelope ID: C5017243-7B12-48C8-A8DB-9EA75301A6B2

29 July 2021

Eric Hausfield
Land Development Certificates
Suite 7, 76 Henry Street,
Penrith 2751

CONDITION B36 ENVIRONMENTAL SUSTAINABILITY

Dear Eric

In accordance with Planning Condition B36:

I confirm that the detailed design of the development incorporates the environmental sustainability objectives, measures and initiatives outlined in Ivanhoe Sustainability Strategy Stage 1B, prepared by Frasers Property, dated August 2018.

Itemized below are Details demonstrating compliance with this condition. Frasers Property are making a commitment to achieve the following:

- 5 Star Green Star Design & As-Built rating for all residential buildings
- 6 Star Green Star Communities rating for the precinct
- Delivery of an integrated solution integrated infrastructure solution via Real Utilities which will allow all buildings to be carbon neutral in operation

For any queries feel free to contact me on the details below.

Kind Regards,

Julia Halioua
Sustainability Advisor
Frasers Property Australia Pty Limited
T +61 2 9767 2937
E julia.halioua@frasersproperty.com.au

DocuSigned by:

9A1064EE64554D0...

11 November 2020

Eric Hausfield
Suite 7, 76 Henry Street,
Penrith NSW 2751
Land Development Certificates

CONDITION B74 PROVIDE AN ACCESS COMPLIANCE CERTIFICATE FROM AN APPROPRIATELY QUALIFIED PERSON

Access and facilities for people with disabilities must be designed in accordance with the BCA. Prior to the commencement of the relevant works, a certificate certifying compliance with this condition from an appropriately qualified person must be provided to the Certifier.

Dear Eric

In accordance with Planning Condition B74: Frasers Ivanhoe Pty Ltd confirm that Condition B74 will be complied with.

However, for the Ivanhoe Estate – Stage 1 Subdivision Works Certificate the access compliance certificate is not required for these works. This has been reviewed with the consultant team Hassell Landscapes and ADW Johnson who have advised that there are no DDA compliance issues or requirements for the Stage 1A subdivision works.

The DDA compliance requirements will be addressed as part of the Building A1 and C1 works.

For any queries feel free to contact me on the details below.

Kind Regards,

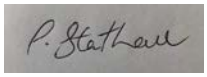

Peter Statham
Project Manager
Frasers Property Australia Pty Limited
T +61 2 9767 2071
E Peter.Statham@frasersproperty.com.au

DocuSign Envelope ID: 39D26B58-0A65-4E23-A62B-B04918DBDFFB

28 July 2021

Eric Hausfield
Land Development Certificates
Suite 7, 76 Henry Street,
Penrith 2751

CONDITION B82 FACILITIES FOR CYCLISTS

Dear Eric

In accordance with Planning Condition B82:

The layout, design, and security of bicycle facilities either on-street or off-street must comply with the minimum requirements of Australian Standard AS 2890.3 – 2015. Details demonstrating compliance must be submitted to the Certifier prior to the issue of the relevant Crown Building Works Certificate for each building.

We can confirm that the detailed design of the development incorporates the measures listed above into the individual buildings. However, note that as Part of the Stage 1B Subdivision works Certificate, there are no cycling facilities.

For any queries feel free to contact me on the details below.

Kind Regards,

DocuSigned by:
P. Statham
62FF86669D394DB

Peter Statham
Project Manager
Frasers Property Australia Pty Limited
T +61 2 9767 2937
E peter.statham@frasersproperty.com.au

Hassell

MIDTOWN MATERIALS & FINISHES SCHEDULE

Stage 1B Construction Certificate Documentation
L-S1B_6001

Prepared for
Frasers Property Australia

Hassell ©
18 October 2021

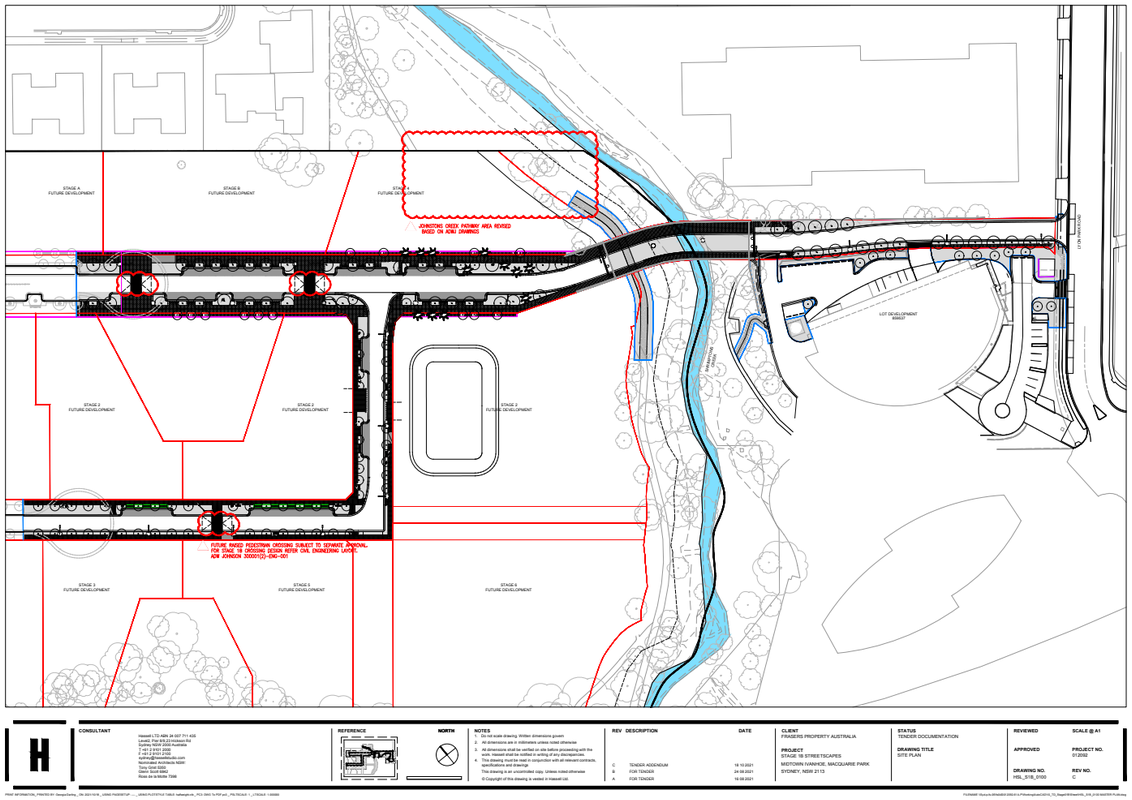

CONSULTANT

Hassell LTD ABN 24 007 711 435
Level2, Pier 8/9 23 Hickson Rd
Sydney NSW 2000 Australia
T +61 2 9101 2000
F +61 2 9101 2100
sydney@hassellstudio.com
hassellstudio.com Nominated Nominated Architect: Tony Gilet 6360
Glenn Scott 6962
Rose de la Motte 7346

REFERENCE

NORTH

NOTES
1. Do not scale drawing. Written dimensions govern
2. All dimensions are in millimetres unless noted otherwise
3. All dimensions shall be verified on site before proceeding with the work. Hassell shall be notified in writing of any discrepancies.
4. This drawing must be read in conjunction with all relevant contracts, specifications and drawings.

This drawing is an uncontrolled copy, unless noted otherwise

© Copyright of this drawing is vested in Hassell Ltd.

REV	DESCRIPTION	DATE
C	TENDER ADDENDUM	18.10.2021
B	FOR TENDER	24.09.2021
A	FOR TENDER	16.09.2021

CLIENT
FRASERS PROPERTY AUSTRALIA

PROJECT
STAGE 1B STREETSCAPES
MIDTOWN IVANHOE, MACQUARIE PARK
SYDNEY, NSW 2113

STATUS
TENDER DOCUMENTATION

DRAWING TITLE
SITE PLAN

REVIEWED

SCALE @ A1

APPROVED

PROJECT NO.
01.0056

DRAWING NO.
HSL_S1B_0100

REV NO.
C

PRINT INFORMATION_PRINTED BY: GeorgiaDarling_ON 2021/10/18 _ LINWIN PAGESETUP: ____ LINWIN PLOTSTYLE TABLE: hatchegacy.ctb _ PC3: DWG To PDF.pc3 _ PAGESIZE: A1 _ LTSCALE: 1.00000

FILENAME: G:\Jobs\HSL\HSL0056 2020-21 Ivanhoe\acad\LS\S1\L_TD_Stage1B\Stage1B_LS_S1B-MASTER.dwg

Contents

Acknowledgment of Country

We acknowledge and respect Traditional Owners across Australia as the original custodians of our land and waters, their unique ability to care for country and deep spiritual connection to it. We honour Elders past, present and emerging whose knowledge and wisdom has, and will, ensure the continuation of cultures and traditional practices.

Hassell
Level 2 Pier 8/9
23 Hickson Road
Sydney NSW Australia 2000
hassellstudio.com
@hassell–studio

Contact
Georgia Darling, Associate
gdarling@hassellstudio.com
Jon Hazelwood, Principal
jhazelwood@hassellstudio.com

Section 1 Furniture, Fixtures and Equipment

Section 2 Hardworks

1.1 FURNITURE

2.1	FURNITURE
CODE	FN 01
DESCRIPTION	SINGLE SEAT 'PRECINCT SEAT'
SUPPLIER	SPARK FURNITURE
FINISH/COLOUR	SEAT: AUSTRALIAN HARDWOOD FRAME: DULUX METROPOLIS BRONZE PEARL
SIZE	500 x 585 x 560mm
LOCATION	STREETSCAPES
DRAWING REF.	L-S1_5201
IMAGE	
CODE	FN 02
DESCRIPTION	BENCH WITH BACKREST 'PRECINCT SEAT'
SUPPLIER	SPARK FURNITURE
FINISH/COLOUR	SEAT: AUSTRALIAN HARDWOOD FRAME: DULUX METROPOLIS BRONZE PEARL
SIZE	1800 x 585 x 560mm
LOCATION	STREETSCAPES
DRAWING REF.	L-S1_5201
IMAGE	
CODE	FN 04
DESCRIPTION	BENCH WITH BACKREST 'PRECINCT SEAT'
SUPPLIER	SPARK FURNITURE
FINISH/COLOUR	SEAT: AUSTRALIAN HARDWOOD FRAME: DULUX METROPOLIS BRONZE PEARL
SIZE	1200 x 585 x 560mm
LOCATION	STREETSCAPES
DRAWING REF.	L-S1_5201
IMAGE	

2.1	FURNITURE
CODE	FN 05
DESCRIPTION	LINEAR STONE EDGING
SUPPLIER	ANL
FINISH/COLOUR	ROUGH SAWN SANDSTONE
SIZE	200 x 200mm
LOCATION	NEIGHBOURHOOD COMMUNAL GARDEN
DRAWING REF.	L-S1_5201
IMAGE	

1.2 FIXTURES

2.2	FIXTURES
CODE	FI 01
DESCRIPTION	CAST ALUMINIUM TREE SURROUNDS 'GR2'
SUPPLIER	STREET FURNITURE AUSTRALIA
FINISH/COLOUR	TEXTURA DARK BRONZE 'GY30BA'
SIZE	1212 x 1212 x 40mm
LOCATION	STREETSCAPE
DRAWING REF.	L-S1_5202
IMAGE	
CODE	FI 02A
DESCRIPTION	'80L MONSOON BIN LB8' - GENERAL WASTE
SUPPLIER	STREET FURNITURE AUSTRALIA
FINISH/COLOUR	BODY: JARRAH HARDWOOD OILED BATTEN FIXING: SUBSURFACE HOOP FIXED LID/COLLAR : TEXTURA DARK BRONZE 'GY30BA' GAL. STEEL LINER WITH ASHTRAY
SIZE	515 DIA x 955MM
LOCATION	STREETSCAPE
DRAWING REF.	L-S1_5201
IMAGE	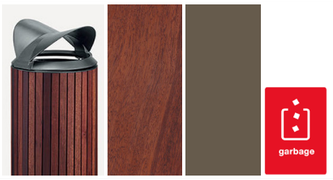
CODE	FI 02B
DESCRIPTION	'80L MONSOON BIN LB8' - RECYCLING
SUPPLIER	SEE F1 02A
FINISH/COLOUR	SEE F1 02A
SIZE	SEE F1 02A
LOCATION	SEE F1 02A
DRAWING REF.	SEE F1 02A
IMAGE	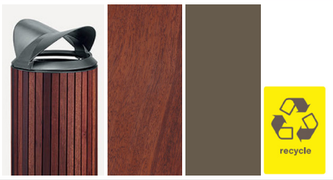

2.2	FIXTURES
CODE	FI-07
DESCRIPTION	NATIVE BIRD NESTING BOX
SUPPLIER	BIRD BOX AUSTRALIA
FINISH/COLOUR	NATURAL TIMBER
SIZE	250 x 250 x 600
LOCATION	COMMUNAL GARDEN
DRAWING REF.	TO MANUFACTURER'S DETAIL
IMAGE	
CODE	FE-02
DESCRIPTION	VERTICAL PALISADE FENCE
SUPPLIER	FINISH - ASTOR METAL FINISHES
FINISH/COLOUR	DULUX DURATEC/ BRONZE PEARL SATIN
SIZE	REFER DETAIL
LOCATION	LGS CAR PARK
DRAWING REF.	HSL_S1B_5203

2.1 STREETSCAPE HARDWORKS

3.1	STREETSCAPE HARDWORKS
CODE	PV 01A
DESCRIPTION	GRANITE PAVING - MAIN 1
SUPPLIER	SAM THE PAVING MAN
FINISH/ COLOUR	HONEY JASPER - EXFOLIATED
SIZE	371 x 696 x 60mm
LOCATION	FOOTPATH - MAIN STREET
DRAWING REF.	L-S1_5301
IMAGE	
CODE	PV 01B
DESCRIPTION	GRANITE PAVING - MAIN 2
SUPPLIER	SAM THE PAVING MAN
FINISH/ COLOUR	MOSAIC RED - EXFOLIATED
SIZE	371 x 696 x 60mm
LOCATION	FOOTPATH - MAIN STREET
DRAWING REF.	L-S1_5301
IMAGE	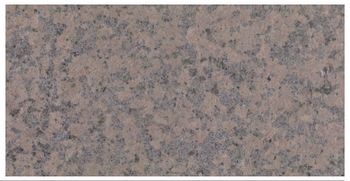
CODE	PV 02
DESCRIPTION	FOOTPATH PAVING
SUPPLIER	SAM THE PAVING MAN
FINISH/ COLOUR	HONEY JASPER - EXFOLIATED
SIZE	246 x 696 x 60mm
LOCATION	NEIGHBOURHOOD STREETS
DRAWING REF.	L-S1_5301
IMAGE	

CODE	PV 03
DESCRIPTION	GRANITE PAVER - HEADER
SUPPLIER	SAM THE PAVING MAN
FINISH/COLOUR	HONEY JASPER - PINEAPPLE
SIZE	227 X 371 x 60mm
LOCATION	MAIN & NEIGHBOURHOOD STREETS
DRAWING REF.	L-S1_5301
IMAGE	
CODE	PV 04 A
DESCRIPTION	GRANITE PAVING - SQUARE
SUPPLIER	SAM THE PAVING MAN
FINISH/COLOUR	ITALIA POPRPHRY - BROWN/RUST/VIOLET
SIZE	231 x 231 x 60mm
LOCATION	MAIN STREET ARRIVAL
DRAWING REF.	L-S1_5301
IMAGE	
CODE	PV 04 B
DESCRIPTION	GRANITE PAVING - SQUARE (TRAFFICABLE)
SUPPLIER	SAM THE PAVING MAN
FINISH/COLOUR	ITALIA POPRPHRY - BROWN/ RUST/ VIOLET
SIZE	231 x 231 x 80mm
LOCATION	MAIN STREET ARRIVAL
DRAWING REF.	L-S1_5301
IMAGE	

2.1 STREETSCAPE HARDWORKS

CODE	PV 05 A
DESCRIPTION	GRANITE PAVING - PARKING 1 (TRAFFICABLE)
SUPPLIER	SAM THE PAVING MAN
FINISH/COLOUR	ITALIA POPRPHRY - BROWN/ RUST/ VIOLET
SIZE	100 x 100 x 80mm
LOCATION	MAIN & NEIGHBOURHOOD STREETS
DRAWING REF.	L-S1_5302
IMAGE	
CODE	PV 05 B
DESCRIPTION	GRANITE PAVING - PARKING DIVIDER
SUPPLIER	SAM THE PAVING MAN
FINISH/COLOUR	SAMSON WHITE - EXFOLIATED
SIZE	100 x 100 x 80mm
LOCATION	MAIN & NEIGHBOURHOOD STREETS
DRAWING REF.	L-S1_5302
IMAGE	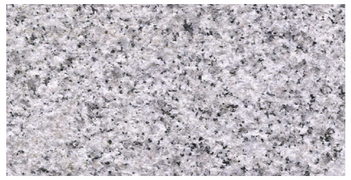
CODE	PV 07
DESCRIPTION	IN SITU CONCRETE FOOTPATH
SUPPLIER	-
FINISH/COLOUR	WHITE, EXPOSED WHITE QUARTZ ROCK & CRUSHED RIVER PEBBLE AGGREGATE
SIZE	SHRIMPTONS CREEK
DRAWING REF.	-
IMAGE	

2.2 WALLS

2.3	WALLS
CODE	WA-02
DESCRIPTION	MASONRY BLOCK RETAINING WALL WITH CAPPING TILE - HEIGHT VARIES
SUPPLIER	AUSTRAL MASONRY
FINISH/COLOUR	NICKLE / GB HONED / RAKED JOINT / WHITE MORTAR / STACK BOND
SIZE	W190 x H190 x L390 / W190 x H40 x L390
LOCATION	ENTRIES, PRIVATE OPEN SPACE & NEIGHBOURHOOD COMMUNAL GARDEN
DRAWING REF.	L-C1-5201
IMAGE	

Studios

Adelaide
Level 1 82 Waymouth Street
Adelaide SA Australia 5000
T +61 8 8220 5000
E adelaide@hassellstudio.com

Brisbane
36 Warry Street
Fortitude Valley QLD Australia 4006
T +61 7 3914 4000
E brisbane@hassellstudio.com

Hong Kong
22F, 169 Electric Road
North Point Hong Kong
T +852 2552 9098
E hongkong@hassellstudio.com

London
1 Curtain Place
London EC2A 3AN United Kingdom
T +44 20 7490 7669
E london@hassellstudio.com

Melbourne
61 Little Collins Street
Melbourne VIC Australia 3000
T +61 3 8102 3000
E melbourne@hassellstudio.com

Perth
Level 1
Commonwealth Bank Building
242 Murray Street
Perth WA Australia 6000
T +61 8 6477 6000
E perth@hassellstudio.com

San Francisco
Level 7 650 California Street
San Francisco CA 94108 United States
T +1 415 860 7067
E sanfrancisco@hassellstudio.com

Shanghai
12F base 45 Caoxi North Road
Xuhui District Shanghai 200030 China
T +8621 5456 3666
E shanghai@hassellstudio.com

Singapore
33 Tras Street
#02-01 078973 Singapore
T +65 6224 4688
E singapore@hassellstudio.com

Sydney
Level 2 Pier 8/9
23 Hickson Road
Sydney NSW Australia 2000
T +61 2 9101 2000
E sydney@hassellstudio.com

Document Control

Rev	Date	Approved By	Description
A	16.08.2021	AE	For Tender
Ab	18.10.2021	AE	For Tender

© Hassell. This document and the ideas incorporated within, as an instrument of professional service, is the property of Hassell. It shall not be used or reproduced in any manner what so-ever, in whole or in part, or for any other project without the prior permission of Hassell.

Hassell

MIDTOWN IVANHOE LANDSCAPE SPECIFICATION

Stage 1B Tender Documentation
HSL-S1B_6003

Prepared for
Frasers Property Australia

Hassell ©
August, 2021

Contents

Acknowledgment of Country

We acknowledge and respect Traditional Owners across Australia as the original custodians of our land and waters, their unique ability to care for country and deep spiritual connection to it. We honour Elders past, present and emerging whose knowledge and wisdom has, and will, ensure the continuation of cultures and traditional practices.

Sections

0171	General Requirements
0241	Landscape - Walling and edging
0242	Landscape - Fences and barriers
0251	Landscape - Soils
0252	Landscape - Soft surfaces
0253	Landscape - Planting
0254	Irrigation
0255	Landscape - Plant Procurement
0256	Landscape - establishment
0274	Concrete pavement
0275	Segmental pavers - mortar bed
0277	Pavement ancillaries
0278	Granular surfaces
0315	Concrete finishes
0316	Precast concrete
0331	Brick and block construction
0332	Stone masonry
0344	Steel - hot-dip galvanized coatings
1424	Landscape - maintenance

0171 GENERAL REQUIREMENTS

1 GENERAL

1.1 RESPONSIBILITIES

General

Requirement: Conform to the following:

- Architectural documentation: ….
- Civil documentation: ….
- Engineering documentation: ….
- Lighting documentation: ….
- Services documentation: ….
- Signage and wayfinding documentation: ….
- … documentation: ….

Design

Design by contractor: If the contractor provides design, use only appropriately qualified persons and conform to all statutory requirements.

Conflict with the documents: If it is believed that a conflict exists between statutory requirements and the documents, notify the contract administrator immediately and provide a recommendation to resolve the conflict.

Noise levels

General: Install systems in conformance with the **Noise level schedule** and within the limits of the contract design and documented equipment performance.

1.2 PRECEDENCE

General

Worksections and referenced documents:

- The requirements of other worksections of the specification override conflicting requirements of this worksection.
- The requirements of the worksections override conflicting requirements of their referenced documents.
- The requirements of the referenced documents are minimum requirements.

1.3 CROSS REFERENCES

General

Requirement: Conform to the following:

- *Landscape Architectural Materials and Finishes Schedule*.

Cross referencing styles

Within the text:

- Worksection titles are indicated by *Italicised* text.
- Subsection titles are indicated by **BOLD** text.
- Clause titles are indicated by **Bold** text.

1.4 REFERENCED DOCUMENTS

Contractual relationships

General: Responsibilities and duties of the principal, contractor and contract administrator are not altered by requirements in the documents referenced in this specification.

Current editions

General: Use referenced documents which are the editions, with amendments, current 3 months before the closing date for tenders, except where other editions or amendments are required by statutory authorities.

1.5 INTERPRETATION

Abbreviations

General: For the purposes of this specification the following abbreviations apply:

- AS: Australian Standard.
- BCA: Building Code of Australia.
- EMC: Electromagnetic compatibility.
- MSDS: Material safety data sheets.
- NATA: National Association of Testing Authorities.
- NZS: New Zealand Standard.
- VOC: Volatile organic compound.

Definitions

General: For the purposes of this specification, the definitions given below apply.

- Attendance: Attendance, provide attendance and similar expressions mean give assistance for examination and testing.
- Contract administrator: Contract administrator has the same meaning as architect or superintendent and is the person appointed by the owner or principal under the contract.
- Default: Specified value, product or installation method which is to be provided unless otherwise documented.
- Design life: The period of time for which it is assumed, in the design, that an asset will be able to perform its intended purpose with only anticipated maintenance but no major repair or replacement being necessary.
- Documented: Documented, as documented and similar terms mean contained in the contract documents.
- Economic life: The period of time from the acquisition of an asset to when the asset, while still physically capable of fulfilling its function and with only anticipated maintenance, ceases to be the lowest cost alternative for satisfying that function.
- Geotechnical site investigation: The process of evaluating the geotechnical characteristics of the site in the context of existing or proposed construction.
- Give notice: Give notice, submit, advise, inform and similar expressions mean give notice (submit, advise, inform) in writing to the contract administrator.
- High level interface: Systems transfer information in a digital format using an open system interface.
- Hot-dip galvanized: Zinc coated to AS/NZS 4680 after fabrication with coating thickness and mass to AS/NZS 4680 Table 1.
- IP: IP, IP code, IP rating and similar expression have the same meaning as IP Code in AS 60529.
- Joints:
  - Construction joint: A joint with continuous reinforcement provided to suit construction sequence.
  - Control joint: An unreinforced joint between or within discrete elements of construction which allows for relative movement of the elements.
  - Contraction joint: An opening control joint with a bond breaking coating separating the joint surfaces to allow independent and controlled contraction of different parts or components, induced by shrinkage, temperature changes or other causes. It may include unbound dowels to assist vertical deflection control.
  - Expansion joint: A closing control joint with the joint surfaces separated by a compressible filler to allow axial movement due to thermal expansion or contraction with changes in temperature or creep. It may include unbound dowels to assist vertical deflection control.
  - Isolation joint: A joint between elements of a structure designed to isolate structural movement while permitting horizontal and/or vertical movement between abutting elements
  - Weakened plane joint: A contraction joint created by forming a groove, extending at least one quarter the depth of the section, either by using a grooving tool, by sawing, or by inserting a premoulded strip.
  - Structural control joint: A control joints (contraction, expansion and isolation) in structural elements when used with applied material and finishes.

  . Substrate joint: A joint in the substrate which includes construction joints and joints between different materials.
  . Sealant joint: A joint filled with a flexible synthetic compound which adheres to surfaces within the joint to prevent the passage of dust, moisture and gases.
- Local government authority: A body established for the purposes of local government by or under a law applying in a state or territory.
- Low level interface: Systems transfer information via terminals and voltage free contacts.
- Manufacturer's and supplier's recommendations: Recommendations, instructions, requirements, specifications (and similar expressions) provided in written or other form by the manufacturer relating to the suitability, use, installation, storage and/or handling of a product.
- Metallic-coated: Steel coated with zinc or aluminium-zinc alloy as follows:
  . Metallic-coated steel sheet: To AS 1397. Metal thicknesses specified are base metal thicknesses.
  . Ferrous open sections zinc coated by an in-line process: To AS/NZS 4791.
  . Ferrous hollow sections zinc coated by a continuous or specialised process: To AS/NZS 4792.
- Network Utility Operator: A person who undertakes the piped distribution of drinking water or natural gas for supply or is the operator of a sewerage system or a stormwater system.
- Network Distributor: Body responsible for the distribution and control of electricity.
- Obtain: Obtain, seek and similar expressions mean obtain (seek) in writing from the contract administrator.
- Practical completion or Defects free completion: The requirements for these stages of completion are defined in the relevant building contract for the project.
- Pipe: Includes pipe and tube.
- Principal: Principal has the same meaning as owner, client and proprietor and is the party to whom the contractor is legally bound to construct the works.
- Professional engineer: As defined by the BCA.
- Proprietary: Proprietary means identifiable by naming manufacturer, supplier, installer, trade name, brand name, catalogue or reference number.
- Provide: Provide and similar expressions mean supply and install and include development of the design beyond that documented.
- Readily accessible: To AS/NZS 3000.
- Registered testing authority:
  . An organisation registered by the National Association of Testing Authorities (NATA) to test in the relevant field; or
  . An organisation outside Australia registered by an authority recognised by NATA through a mutual recognition agreement; or
  . An organisation recognised as being a Registered Testing Authority under legislation at the time the test was undertaken.
- Required: Means required by the documents, the local council or statutory authorities.
- If required: A conditional specification term for work which may be shown in the documents or is a legislative requirement.
- Samples: Includes samples, prototypes and sample panels.
- Statutory authority: A public sector entity created by legislation, that is, a specific law of the Commonwealth.
- Supply: Supply, furnish and similar expressions mean supply only.
- Tests:
  . Pre-completion tests: Tests carried out before completion tests.
    * Type tests: Tests carried out on an item identical with a production item, before delivery to the site.
    * Production tests: Tests carried out on a purchased item, before delivery to the site.
    * Progressive tests: Tests carried out during installation to demonstrate performance in according with this specification.
    * Site tests: Tests carried out on site.

. Completion tests: Tests carried out on completed installations or systems and fully resolved before the date for, to demonstrate that the installation or system, including components, controls and equipment, operates correctly, safely and efficiently, and meets performance and other requirements. The contract administrator may direct that completion tests be carried out after the date for practical completion.

- Tolerance: The permitted difference between the upper limit and the lower limit of dimension, value or quantity.
- Verification: Provision of evidence or proof that a performance requirement has been met or a default exists.

1.6 CONTRACT DOCUMENTS

General

Requirement: Always refer to specialist engaged consultant documentation, including but not limited to, architectural, civil, engineering, lighting, services, and signage and wayfinding.

Services diagrammatic layouts

General: Layouts of service lines, plant and equipment shown on the drawings are diagrammatic only, except where figured dimensions are provided or calculable.

Before commencing work:

- Obtain measurements and other necessary information.
- Coordinate the design and installation in conjunction with all trades.

Levels

General: Spot levels take precedence over contour lines and ground profile lines.

Drawings and manuals for existing services

Warranty: No warranty is given as to the completeness or accuracy of drawings and/or manuals of existing services.

1.7 INSPECTION

Notice

Concealment: If notice of inspection is required in respect of parts of the works that are to be concealed, advise when the inspection can be made before concealment.

Tests: Give notice of the time and place of documented tests.

Minimum notice for inspections to be made and for witnessing of tests: Conform to the **Notices schedule**.

Light level requirements: to AS/NZS 1680.2.4.

Attendance

General: Provide attendance for documented inspections and tests.

1.8 SUBMISSIONS

General

Submit to: Principal and Hassell.

Default timing: Make submissions at least 10 working days before ordering products for, or starting installation of, the respective portion of the works.

Program: Allow in the construction program for at least the following times for response to submissions:

Shop drawings: 10 working days for initial review and 5 working days for each resubmittal.

Samples and prototypes: 5 working days.

Manufacturers' or suppliers' recommendations: 5 working days.

Product data: 5 working days.

Product/design substitution or modification: 5 working days.

Proposed products schedules: If major products are not specified as proprietary items, submit a schedule of those proposed for use within 3 weeks of site possession.

Identification
General: Identify the project, contractor, subcontractor or supplier, manufacturer, applicable product, model number and options, as appropriate and include pertinent contract document references. Include service connection requirements and product certification.

Non-compliance: Identify proposals for non-compliance with project requirements, and characteristics which may be detrimental to successful performance of the completed work.

Errors
General: If a submission contains errors, make a new or amended submission as appropriate, indicating changes made since the previous submission.

Submissions - electronic copies
File format: .pdf and, where applicable, .dwg.

Transmission medium: Project web base application.

Submissions - hard copy
Quantity: Two (2) copies of each size.

Size: the same size as the standard contract documents and A3 reduced size.

Authorities
Authorities' approvals: Submit documents showing approval by the authorities whose requirements apply to the work.

Correspondence: Submit copies of correspondence and notes of meetings with authorities whose requirements apply to the work.

Building penetrations
General: If it is proposed to penetrate or fix to the following, submit details of the methods proposed to maintain the required structural, fire and other properties:

Structural building elements including external walls, fire walls, fire doors and access panels, other tested and rated assemblies or elements, floor slabs and beams.

Membrane elements including damp-proof courses, waterproofing membranes and roof coverings. If penetrating membranes, provide a waterproof seal between the membrane and the penetrating component.

Certification
General: Submit certification that the plant and equipment submitted meets all requirements of the contract documents.

Materials and components
Product certification: If products must conform to product certification schemes, submit evidence of conformance.

Product data: For proprietary equipment, submit the manufacturer's product data as follows:

- Technical specifications and drawings.
- Type-test reports.
- Performance and rating tables.
- Recommendations for installation and maintenance.

Substitutions
Identified proprietary items: Identification of a proprietary item does not necessarily imply exclusive preference for the item so identified, but indicates the necessary properties of the item.

Alternatives: If alternatives to the documented products, methods or systems are proposed, submit sufficient information to permit evaluation of the proposed alternatives, including the following:

- Evidence that the performance is equal to or greater than that specified.
- Evidence of conformity to a cited standard.
- Samples.
- Essential technical information, in English.
- Reasons for the proposed substitutions.
- Statement of the extent of revisions to the contract documents.
- Statement of the extent of revisions to the construction program.
- Statement of cost implications including costs outside the contract.

- Statement of consequent alterations to other parts of the works.

Availability: If the documented products or systems are unavailable within the time constraints of the construction program, submit evidence.

Criteria: If the substitution is for any reason other than unavailability, submit evidence that the substitution:

- Is of net enhanced value to the principal.
- Is consistent with the contract documents and is as effective as the identified item, detail or method.

Samples

Submission: Submit nominated samples.

Incorporation of samples: If it is intended to incorporate samples into the works, submit proposals. Incorporate samples in the works which have been endorsed for inclusion. Do not incorporate other samples.

Retention of samples: Keep endorsed samples in good condition on site, until the date of practical completion.

Shop drawings

General: Include dimensioned drawings showing details of the fabrication and installation of structural elements, building components, services and equipment, including relationship to building structure and other services, cable type and size, and marking details.

Diagrammatic layouts: Coordinate work shown diagrammatically in the contract documents, and submit dimensioned set-out drawings.

Services coordination: Coordinate with other building and service elements. Show adjusted positions on the shop and record drawings.

Space requirements: Check space requirements of equipment and services indicated diagrammatically in the contract documents.

Checking: Ensure that the drawings have been checked before submission.

2 PRODUCTS

2.1 GENERAL

Manufacturers' or suppliers' recommendations

General: Provide and select, if no selection is given, transport, deliver, store, handle, protect, finish, adjust and prepare for use the manufactured items in conformance with the current written recommendations and instructions of the manufacturer or supplier.

Proprietary items/systems/assemblies: Assemble, install or fix to substrate in conformance with the current written recommendations and instructions of the manufacturer or supplier.

Project modifications: Advise of activities that supplement, or are contrary to, manufacturers' or suppliers' written recommendations and instructions.

Sealed containers

General: If materials or products are supplied by the manufacturer in closed or sealed containers or packages, bring the materials or products to point of use in the original containers or packages.

Prohibited materials

Do not provide the following:

- Materials listed in the Safe Work Australia Hazardous Substances Information System (HSIS).
- Materials that use chlorofluorocarbon (CFC) or hydro chlorofluorocarbon (HCFC) in the manufacturing process.

2.2 TESTS

Attendance

General: Provide attendance on tests.

Testing authorities

General: Except for site tests, have tests carried out by a Registered testing authority and submit test reports.

- Reports: Submit copies of test reports, including certificates for type tests, showing the observations and results of tests and conformance or non-conformance with requirements.

- Site tests: Use instruments calibrated by authorities accredited by a Registered testing authority.

2.3 MATERIALS AND COMPONENTS

Consistency
General: For each material or product use the same manufacturer or source and provide consistent type, size, quality and appearance.

Corrosion resistance
General: Conform to the following atmospheric corrosivity category as defined in AS/NZS 2312.

Galvanizing
Severe conditions: Galvanize mild steel components (including fasteners) to AS 1214 or AS/NZS 4680 as appropriate, if:

- Exposed to weather.
- Embedded in masonry.
- Exposed to or in air spaces behind the external leaf of masonry walls.
- In contact with chemically treated timber, other than copper chrome arsenate (CCA).

3 EXECUTION

3.1 OFF-SITE DISPOSAL

Removal of material
General: Dispose of building waste material off site to the requirements of the relevant authorities.

3.2 FIXING

General
Suitability: If equipment is not suitable for fixing to non-structural building elements, fix directly to structure and trim around penetrations in non-structural elements.

Fasteners
General: Use proprietary fasteners capable of transmitting the loads imposed, and sufficient to ensure the rigidity of the assembly.

3.3 WARRANTIES

General
General: If a warranty is documented or if a manufacturer's standard warranty extends beyond the end of the defects liability period, name the principal as warrantee. Register with manufacturers as necessary. Retain copies delivered with components and equipment.

Commencement: Commence warranty periods at practical completion or at acceptance of installation, if acceptance is not concurrent with practical completion.

Approval of installer: If installation is not by manufacturer, and product warranty is conditional on the manufacturer's approval of the installer, submit the manufacturer's written approval of the installing firm.

3.4 RECORD DRAWINGS

General
General: Submit record drawings. Show the 'as installed' locations of building elements, plant and equipment. Show off-the-grid dimensions where applicable.

Shop drawings: Submit all documented shop drawings, including 'as installed' amendments.

Services: Show dimensions, types and location of the services in relation to permanent site features and other underground services. Show the spatial relationship to building structure and other services. Include all changes made during commissioning and the maintenance period.

Services below ground or concealed: If services and fittings are below ground or concealed, show the depth and dimensioned references that will allow the future location of the service for maintenance or expansion.

Extensions and/or changes to existing: If a drawing shows extensions and/or alterations to existing installations, include sufficient of the existing installation to make the drawing comprehensible without reference to drawings of the original installation.

Diagrams: Provide diagrammatic drawings of each system including the following:
- Controls.
- Piping including all valves and valve identification tags.
- Principal items of equipment.
- Single line wiring diagrams.
- Acoustic and thermal insulation.
- Access provisions.
- Fixings.
- Fixtures.
- Switchgear and controlgear assembly circuit schedules including electrical service characteristics, controls and communications.
- Charts of valve tag numbers, with location and function of each valve, keyed to flow and control diagrams.

Detention: If on-site detention tanks or pondage are provided include the volume required on the drawing and the permitted flow rate to the connected system.

Domestic cold water or fire mains: Show the pressure available at the initial connection point and the pressure available at the most disadvantaged location on each major section of the works.

Stormwater: If storm water pipes are shown include the pipe size and pipe grade together with the maximum acceptable flow and the actual design flow.

Accuracy

Progress recording: Keep one set of shop drawings on site at all times expressly for the purpose of marking changes made during the progress of the works.

Documents: Incorporate all modifications made during the progress of the work and testing period. Show any provisions for the future.

Endorsement: Sign and date all record drawings.

Drawing layout

General: Use the same borders and title block as the contract drawings.

Quantity and format

General: Conform to **SUBMISSIONS.**

Date for submission

General: Not later than 2 weeks after the date of practical completion.

3.5 OPERATION AND MAINTENANCE MANUALS

General

General: Submit operation and maintenance manuals for the whole of the work.

Authors and compilers: Personnel experienced in the maintenance and operation of equipment and systems installed, and with editorial ability.

Referenced documents: If referenced documents or technical worksections require that manuals be submitted, include corresponding material in the operation and maintenance manuals.

Subdivision: By installation or system, depending on project size.

Contents

General: Include the following:
- Table of contents: For each volume. Title to match cover.
- Directory: Names, addresses, and telephone and facsimile numbers of principal consultant, subconsultants, contractor, subcontractors and names of responsible parties.
- Record drawings: Complete set of record drawings, full size.
- Drawings and technical data: As necessary for the efficient operation and maintenance of the installation.
- Installation description: General description of the installation.
- Systems descriptions and performance: Technical description of the systems installed and mode of operation, presented in a clear and concise format readily understandable by the principal’s staff. Identify function, normal operating characteristics, and limiting conditions.

- Equipment descriptions:
  . Name, address, email address and telephone and facsimile numbers of the manufacturer and supplier of items of equipment installed, together with catalogue list numbers.
  . Schedules (system by system) of equipment, stating locations, duties, performance figures and dates of manufacture. Provide a unique code number cross-referenced to the record and diagrammatic drawings and schedules, including spare parts schedule, for each item of equipment installed.
  . Manufacturers' technical literature for equipment installed, assembled specifically for the project, excluding irrelevant matter. Mark each product data sheet to clearly identify specific products and component parts used in the installation, and data applicable to the installation.
  . Supplements to product data to illustrate relations of component parts. Include typed text as necessary.
- Certificates:
  . Certificates from authorities.
  . Copies of manufacturers' warranties.
  . Product certification.
  . Test certificates for each service installation and all equipment.
  . Test reports
  . Balancing reports for mechanical installations.
  . Control system testing and commissioning results.
- 7 day record of all trends at commissioning.
- Operation procedures:
  . Manufacturers' technical literature as appropriate.
  . Safe starting up, running-in, operating and shutting down procedures for systems installed. Include logical step-by-step sequence of instructions for each procedure.
  . Control sequences and flow diagrams for systems installed.
  . Legend for colour-codes services.
  . Schedules of fixed and variable equipment settings established during commissioning and maintenance.
  . Procedures for seasonal changeovers.
  . If the installation includes cooling towers, a water efficiency management plan.
- Maintenance procedures:
  . Detailed recommendations for preventative maintenance and procedures, including schedule of maintenance work including frequency and manufacturers' recommended tests.
  . Manufacturer's technical literature as appropriate. Register with manufacturer as necessary. Retain copies delivered with equipment.
  . Safe trouble-shooting, disassembly, repair and reassembly, cleaning, alignment and adjustment, balancing and checking procedures. Provide logical step-by-step sequence of instructions for each procedure.
  . Schedule of spares recommended to be held on site, being those items subject to wear or deterioration and which may involve the principal in extended deliveries when replacements are required. Include complete nomenclature and model numbers, and local sources of supply.
  . Schedule of normal consumable items, local sources of supply ,and expected replacement intervals up to a running time of 40 000 hours. Include lubrication schedules for equipment.
  . Schedules for recording recommissioning data to enable changes in the system over time can be identified.
  . Instructions for use of tools and testing equipment.
  . Emergency procedures, including telephone numbers for emergency services, and procedures for fault finding.
  . Material safety data sheets (MSDS).
- Maintenance records:

. Prototype periodic maintenance and performance report to AS 1851, AS/NZS 3666.2 and AS/NZS 3666.3 as appropriate, prepared to include project specific details.

- Submit, in binders which match the manuals, loose leaf log book pages designed for recording completion activities including operational and maintenance procedures, materials used, test results, comments for future maintenance actions and notes covering the condition of the installation. Include completed log book pages recording the operational and maintenance activities performed up to the time of practical completion.
- Number of pages: The greater of 100 pages or enough pages for the maintenance period and a further 12 months.

Format – electronic copies
Printing: Except for drawings required in the **RECORD DRAWINGS** clause provide material that can be legibly printed on A4 size paper.

Scope: Provide the same material as documented for hardcopy in electronic format.

Quantity and format: Conform to **Submissions – electronic copies**.

Format – hard copy
General: A4 size loose leaf, in commercial quality, 4 ring binders with hard covers, each indexed, divided and titled. Include the following features:

- Cover: Identify each binder with typed or printed title *OPERATION AND MAINTENANCE MANUAL*, to spine. Identify title of project, volume number, volume subject matter, and date of issue.
- Dividers: Durable divider for each separate element, with typed description of system and major equipment components. Clearly print short titles under laminated plastic tabs.
- Drawings: Fold drawings to A4 size with title visible, insert in plastic sleeves (one per drawing) and accommodate them in the binders.
- Pagination: Number pages.
- Ring size: 50 mm maximum, with compressor bars.
- Text: Manufacturers' printed data, including associated diagrams, or typewritten, single-sided on bond paper, in clear concise English.

Number of copies: 3.

Date for submission
Date for draft submission: The earlier of the following:

- 2 weeks before the date for practical completion.
- Commencement of training on services equipment.

Date for final submission: Within 2 weeks after practical completion.

3.6 TOOLS AND SPARE PARTS

Spare parts
General: Provide spare parts listed in the appropriate worksections.

Tools and spare parts schedule
General: At least 8 weeks before the date for practical completion, submit a schedule of tools, portable instruments and spare parts necessary for maintenance of the installation. For each item state the recommended quantity and the manufacturer's current price. Include the following in the prices:

- Checking receipt, marking and numbering in conformance with the spare parts schedule.
- Packaging and delivery to site.
- Painting, greasing and packing to prevent deterioration during storage.
- Referencing equipment schedules in the operation and maintenance manuals.
- Suitable means of identifying, storing and securing the tools and instruments. Include instructions for use.

Replacement: Replace spare parts used during the maintenance period.

3.7 COMMISSIONING AND COMPLETION TESTS

Reports
General: Submit reports indicating observations and results of tests and compliance or non-compliance with requirements.

Notice
Inspection: Give sufficient notice for inspection to be made of the commissioning and completion testing of the installation.

Controls
General: Calibrate, set and adjust control instruments, control systems and safety controls.

Samples
General: Remove unincorporated samples on completion.

Circuit protection
General: Confirm that circuit protective devices are sized and adjusted to protect installed circuits.

Completion tests
General: Test the works under the contract to demonstrate compliance with the documented performance requirements of the installation.

Functional checks: Carry out functional and operational checks on energised equipment and circuits and make final adjustments for the correct operation of safety devices and control functions.

Proprietary equipment: Submit type test reports confirming compliance of proprietary equipment.

Sound pressure level measurements: Conform to the following:

- Correction for background noise: To AS/NZS 2107 Table B1.
- External: To AS 1055.1.
- Internal: To AS/NZS 2107.
- Measurement positions: If a test position is designated only by reference to a room or space, do not take measurements less than 1 m from the floor, ground or walls.
- Sound pressure level analysis: Measure the sound pressure level and the background sound pressure level over the full range of octave band centre frequencies from 31.5 Hz to 8 kHz at the designated positions.
- Sound pressure levels: Measure the A-weighted sound pressure levels and the A-weighted background sound pressure levels at the designated positions.

Test instruments: Use instruments calibrated by a Registered testing authority.

Certification
General: On satisfactory completion of the installation and before the date of practical completion, submit certificates stating that each installation is operating correctly.

3.8 TRAINING

General
Duration: Instruction to be available for the whole of the commissioning and running-in periods.

Format: Conduct training at agreed times, at system or equipment location. Also provide seminar instruction to cover all major components.

Operation and maintenance manuals: Use items and procedures listed in the final draft operation and maintenance manuals as the basis for instruction. Review contents in detail with the principal’s staff.

Certification: Provide written certification of attendance and participation in training for each attendee. Provide register of certificates issued.

Demonstrators
General: Use only qualified manufacturer’s representatives who are knowledgeable about the installations.

Maintenance
General: Explain and demonstrate to the principal’s staff the purpose, function and maintenance of the installations.

Operation
General: Explain and demonstrate to the principal’s staff the purpose, function and operation of the installations.

Seasonal operation
General: For equipment requiring seasonal operation, demonstrate during the appropriate season and within 6 months.

3.9 CLEANING

Final cleaning

General: Before practical completion, clean throughout, including all exterior and interior surfaces except those totally and permanently concealed from view.

Labels: Remove all labels not required for maintenance.

3.10 PERIODIC MAINTENANCE OF SERVICES

General

General: During the maintenance period, carry out periodic inspections and maintenance work as recommended by manufacturers of supplied equipment, and promptly rectify faults.

Emergencies: Attend emergency calls promptly.

Annual maintenance: Carry out recommended annual maintenance procedures before the end of the maintenance period.

Maintenance period: The greater of the defects liability period and the period nominated in the **Maintenance requirements schedule**.

Maintenance program

General: Submit details of maintenance procedures and program, relating to installed plant and equipment, 6 weeks before the date for practical completion. Indicate dates of service visits. State contact telephone numbers of service operators and describe arrangements for emergency calls.

Maintenance records

General: Record in binders provided with operation and maintenance manuals.

Referenced documents: If referenced documents or technical worksections require that log books or records be submitted, include this material in the maintenance records.

Service visits: Record comments on the functioning of the systems, work carried out, items requiring corrective action, adjustments made and name of service operator. Obtain the signature of the principal's designated representative.

Site control

General: Report to the principal's designated representative on arriving at and before leaving the site.

3.11 POST-CONSTRUCTION MANDATORY INSPECTIONS AND MAINTENANCE

General

General: For the duration of the defects liability period, provide inspections and maintenance of safety measures required by the following:

- The Building Code of Australia.
- AS 1851.
- Other statutory requirements applicable to the work.

Records: Provide mandatory records.

Certification: Certify that mandatory inspections and maintenance have been carried out and that the respective items conform to statutory requirements. Submit certification.

Annual inspection: Provide an annual inspection and maintenance immediately prior to the end of the defects liability period.

0241 LANDSCAPE – WALLING AND EDGING

1 GENERAL

1.1 RESPONSIBILITIES

General
General: Provide walling and edging as documented.

1.2 CROSS REFERENCES

General
Requirement: Conform to the following:
- *General requirements*.
- Materials and finishes schedule.
- *Concrete finishes*.
- *Brick and block construction*.
- *Stone masonry*.

1.3 INSPECTION

Notice
Inspection: Give notice so inspection may be made of the following:
- Setting out before commencement of construction.
- Geotextiles and subsurface drainage to engineer's requirements.

1.4 SUBMISSIONS

Samples
Submit samples as follows:
- Street Wall – Stone Blockwork – WA 01.
- Insitu Concrete Retaining Wall – WA 02.
- Stretcher Bond Wall – WA 03.
- Planter Walls – Fabricated Steel – WA 04.
- Steel Edge.

2 PRODUCTS

2.1 STONE WALLS

General
Requirement: Conform to section 0332, the materials and finishes schedule, and the design drawings.

Walling stone
Natural stone: Stone of uniform quality, sound and free from defects liable to affect its strength, appearance or durability.

Field stone: Local weathered uncut random sized natural stones.

Quarried stone: Cut or uncut random or regular size stone.

2.2 CONCRETE

General
Requirement: Conform to engineer's documentation, section 0315, the materials and finishes schedule, and the design drawings.

Insitu concrete
Standard: To AS 1379.

Exposure classification: To AS 3600 Table 4.3.

2.3 BRICK WALLS

General
Requirement: Conform to section 0331, the landscape architectural materials and finishes schedule, and the design drawings.

2.4 STEEL WALLS

General
Requirement: Conform to the landscape architectural materials and finishes schedule, and the design drawings.

Steel
Requirement: Prepare shop drawings.

Product: Corten steel.

Thickness: 6mm.

Finish: Pre-weathered with minimum 4-6 wet/dry treatment prior to site delivery.

2.5 EDGING

General
Requirement: As detailed in the design drawings.

Steel
Product: Stainless steel equal angle.

Grade: 316.

Thickness: 3mm.

Finish: Satin.

3 EXECUTION

3.1 GENERAL

Set out
General: Set out the positions of walls and edging and mark the positions of furniture.

Clearing
Extent: Except for trees or shrubs to be retained, clear vegetation within 1 m of the landscape walls. Grub out stumps and roots of removed trees or shrubs and trim the grass to ground level, but do not remove the topsoil.

Excavation
Extent: Excavate for foundations and footings, to engineer's documentation.

3.2 STONE WALLS

General
Requirement: Conform to section 0332, the materials and finishes schedule, and the design drawings.

Construction
Generally: Select the stones for their locations and lay them in the wall with the minimum of stonecutting.

Copings: Select stones of uniform size and finish the top of the wall to a level line.

3.3 CONCRETE

General
Requirement: Conform to engineer's documentation, section 0315, the materials and finishes schedule, and the design drawings.

3.4 BRICK WALLS

General
Requirement: Conform to engineer's documentation, section 0331, the materials and finishes schedule, and the design drawings.

3.5 STEEL WALLS

General
Requirement: Conform to manufacturer's shop drawings, and the design drawings.

3.6 EDGING

Steel
Installation: Set edgings flush with adjoining surfaces and each join. Fix with 600mm long x 12mm diameter pons welded to bottom edge at 1000 mm maximum centres and 200mm in from each end.

0242 LANDSCAPE – FENCES AND BARRIERS

1 GENERAL

1.1 RESPONSIBILITIES

General

General: Provide fences and barrier systems:

- Complete for their function.
- Conforming to the detail and location drawings.
- Firmly fixed in position.

1.2 CROSS REFERENCES

General

Requirement: Conform to the following:

- *General requirements*.
- Materials and finishes schedule.
- *Steel – hot-dip galvanised coatings.*

1.3 INSPECTION

Notice

Inspection: Give notice so inspection may be made of the following:

- Boundary survey location if applicable.
- Setout before construction.
- Foundation conditions before placing concrete in footings.

1.4 SUBMISSIONS

Samples

Submit samples as follows:

- Vertical Palisade Fence – FE 01.

2 PRODUCTS

2.1 STEEL

General

Requirement: Conform to the landscape architectural materials and finishes schedule, and the design drawings.

Steel

Requirement: Prepare shop drawings.

Posts, rails, stays and pickets: To AS/NZS 1163.

- Grade: C 350 L0.

Material: Hot dipped galvanised steel, in accordance with section 0344.

Finish: Painted, colour to be advised.

2.2 CONCRETE

General

Standard: To AS 1379.

Exposure classification: To AS 3600 Table 4.3.

3 EXECUTION

3.1 CONSTRUCTION GENERALLY

Set out
General: Set out the fence line and mark the positions of posts, gates and bracing panels.

Property boundaries: Confirm by survey.

Clearing
Fence line: Except trees or shrubs to be retained, clear vegetation within 1 metre of the fence alignment. Grub out the stumps and roots of removed trees or shrubs and trim the grass to ground level, but do not remove the topsoil.

Excavation
Posts: Excavate post holes so that they have vertical sides and a firm base. If suitable for reuse, relocate surplus material to stockpile, otherwise dispose of off-site.

Erection
Line and level: Erect vertically. Set heights to follow the contours of natural ground.

Concrete footings
General: To manufacturer's shop drawings.

In ground: Place mass concrete around posts to protect posts from waterlogged conditions and finish with a weathered top falling 25 mm from the post to ground level.

On slabs: Provide welded and drilled post base flanges for fixing with masonry anchors to the concrete. Ensure fixings are countersunk and subsurface.

On walls: Core drilled posts into wall, Non-shrink grout to match wall finish.

3.2 GATES

Hardware
Provide the following:

- Drop bolt and ferrule to each leaf of double gates.
- Latch to one leaf of double gates.
- Provision for locking by padlock.
- Hinges to ensure smooth operation and adjustment for future sagging.

Hand access
General: Where required, provide hand holes to give access from outside to reach locking provision.

3.3 FENCING

Steel palisade fence
General: Conform to manufacturer's shop drawings, and the design drawings.

Fixings: Countersunk fixings.

0251 LANDSCAPE – SOILS

1 GENERAL

1.1 RESPONSIBILITIES

General

General: Provide landscape soil as documented.

1.2 CROSS REFERENCES

General

Requirement: Conform to the following:

- *General requirements*.
- *Soft surfaces.*
- *Planting.*

1.3 STANDARDS

Soils

Site and imported topsoil: To AS 4419.

Potting mixes: To AS 3743.

Composts, soil conditioners and mulches: To AS 4454.

1.4 INTERPRETATION

Definitions

General: For the purposes of this worksection the following definitions apply:

- Bad ground: Ground unsuitable for the purposes of the works, including fill liable to subsidence, ground containing cavities, faults or fissures, ground contaminated by harmful substances and ground which is or becomes soft, wet or unstable.
- Site rock: Rocks selected for salvage.
- Site topsoil: Soil excavated from the site which contains organic matter, supports plant life, conforms generally to the fine to medium texture classification to AS 4419 (loam, silt, clay loam) and free from the following:
  - . Stones > 25 mm diameter.
  - . Clay lumps > 75 mm diameter.
  - . Weeds and tree roots.
  - . Sticks and rubbish.
  - . Material toxic to plants.
- Imported topsoil: Similar to naturally occurring local topsoil, suitable for the establishment and on going viability of the selected vegetation, free of weed propagules and of contaminants, and classified by texture as follows to AS 4419 Appendix I:
  - . Fine: Clay loam, fine sandy loam, sandy clay loam, silty loam, loam.
  - . Medium: Sandy loam, fine sandy loam.
  - . Coarse: Sand, loamy sand.
- Low density soil: Soil for use on an artificial base material, e.g. roof top garden or large landscape containers usually be blends of mineral and organic compounds with the following properties:
  - . Bulk density: 0.3 to 0.6 kg/L.
  - . Organic matter: 10 % to 40 % by mass.
- Natural soil: A soil dug from the landscape and presented for use with no more than minor amendment. This soil may be topsoil, subsoil or a mixture of both, with a bulk density < 0.6 kg/L.
- Organic soil: A general purpose soil (normally an amended natural soil or soil blend) with the following properties:
  - . Bulk density: > 0.6 kg/L.

  . Organic matter: 15% to 25% by mass. Naturally occurring organic soil can be 95% organic by mass.
- Soil blend: A general purpose soil derived from the blending of two or more of sand, natural soil material or organic materials and with a bulk density and organic matter to meet site specific requirements.
- Top dressing: A soil suitable for surface application to lawns.

1.5 GEOTECHNICAL SITE INVESTIGATION

Notice
If the following are encountered, give notice immediately and obtain instructions before carrying out any further work in the affected area:
- Bad ground.
- Discrepancies.
- Rock.
- Springs, seepages.
- Topsoil > 100 mm deep.

1.6 INSPECTION

Notice
Inspection: Give notice so inspection may be made of the following:
- Setting out completed.
- Subgrades cultivated or prepared for placing topsoil.
- Topsoil spread before planting.
- Grassing bed prepared before turfing, seeding, or temporary grassing.

1.7 TESTS

Soil tests
General: To AS 4419, Table 1.

Sampling: As recommended in AS 4419 Appendix A.

Laboratory: NATA registered.

Imported topsoil tests: Submit the results of type tests to AS 4419 Appendix B to I (topsoil), or AS 3743 Appendix D to G (potting mixes), as applicable.

Site topsoil tests: To AS 4419 Appendix C to I.

1.8 SUBMISSIONS

Soil tests for imported topsoil
Report: Submit a certificate noting the following:
- Suitability of each soil type for its specified use.
- Similarity to naturally occurring local soil.
- Suitability for establishment and on-going viability of the site specified vegetation.
- Absence of any weed propagules or contaminants.

Ameliorants recommendation: If required to include ameliorants, recommend the source of ameliorant material, rates and methods of incorporation.

Soil tests for site topsoil
Report: Submit a certificate noting the following:
- Suitability of the soil for specified use.
- Suitability for establishment and on-going viability of the site specified vegetation.
- Presence of any weed propagules or contaminants.

Recommendation:
- Soil amelioration: If required to include ameliorants, the source of ameliorant material, rates and methods of incorporation.
- Purpose: Amelioration recommendations for the following:
  . Bushland reconstruction areas.

. Planting on grade.
. Grass mixes.
- Weed eradication: Species and eradication method.
- Contaminant removal.

Samples
General: Submit representative samples of each material, packed to prevent contamination and labelled to indicate source and content.

Bulk materials: Submit a 1 kg sample of each type specified. Submit bulk material samples, with required test results, at least 5 working days before bulk deliveries.

Suppliers
Statements: Submit statements from suppliers of soils and other materials, giving the following, where applicable:
- Particulars of the supplier's experience in the required type of work.
- Production capacity for material of the required type, sizes and quantity.
- Lead times for delivery of the material to the site.

Materials
Supplier's data: Submit supplier's data including the following:
- Material source of supply for topsoil, filling, stone and filter fabrics.

Compost: Submit a certificate of proof of compost pH value.

Execution
Program: Submit a work program in the form of a bar chart, for the landscape works.

2 PRODUCTS

2.1 TOPSOIL

Source
General: Import topsoil fit for purpose and suitable for establishment and longer term survival of the nominated plant material, unless the topsoil type can be provided from material recovered from the site.

General
Deliveries: Documentation to AS 4419, clause 8.

Additives: If using additives to raise topsoil to the required standard, ensure compliance with the relevant test criteria of AS 4419.

Nitrogen drawdown: If the NDI_{150} value is < 0.5 to AS 4419 Appendix E add a source of soluble nitrogen to bring the value above zero.

Compost: Provide well rotted vegetative material or animal manure, free from harmful chemicals, grass and weed growth to the organic content by mass noted in the soil test recommendations.

Imported topsoil
Particle size: Provide soil to the **Topsoil particle size table**.

Topsoil particle size table (% passing by mass)

AS sieve aperture to AS 1152	Soil textures		
	Fine	Medium	Coarse
2.36	100	100	100
1.18	90 – 100	95 – 100	95 – 100
0.60	75 – 100	75 – 100	70 – 90
0.30	57 – 90	55 – 85	30 – 46
0.15	45 – 70	38 – 55	10 – 22
0.075	35 – 55	25 – 35	5 – 10
0.002		2 – 15	2 – 8

Nutrient levels: Provide soil to the **Topsoil nutrient level table**.

Topsoil nutrient level table

Nutrient	Unit	Sufficiency range
Nitrate-N (NO_3)	mg/kg	> 25
Phosphate-P (PO_4) – P tolerant	mg/kg	43 - 63
Phosphate-P (PO_4) – P sensitive	mg/kg	< 28
Phosphate-P (PO_4) – P very sensitive	mg/kg	< 6
Potassium (K)	mg/kg	178 - 388
Sulphate-S (SO_4)	mg/kg	39 - 68
Calcium (Ca)	mg/kg	1200 - 2400
Magnesium (Mg)	mg/kg	134 - 289
Iron (Fe)	mg/kg	279 - 552
Manganese (Mn)	mg/kg	18 - 44
Zinc (Zn)	mg/kg	2.6 - 5.1
Copper (Cu)	mg/kg	4.5 - 6.3
Boron (B)	mg/kg	1.4 - 2.7
Method References pH in H_2O (1:5), pH in $CaCl_2$ (1:5) and Electrical Conductivity (EC) by Rayment & Higginson (1992) method 4A2, 4B2, 3A1 Soluble Nitrate-N by APHA 4500 Soluble Chloride by Rayment & Higginson (1992) modified method 5A2 Extractable P by Mehlich 3 – ICP Exchangeable cations – Ca, Mg, K, Na by Mehlich 3 – ICP Extractable S by Mehlich 3 – ICP Extractable trace elements (Fe, Mn, Zn, Cu, B) by Mehlich 3 - ICP		

Bushland restoration nutrient levels: Provide topsoil with nutrient levels related to the soils of the local natural bushland.

Site topsoil

General: In accordance with the soil test recommendations.

Soil blend: Stripped topsoil with ameliorants to AS 4419 clause 4.6.

2.2 SOIL MIX TYPE A

General: Provide soil mix type equal to Premium Garden Mix as supplied by Australian Native Landscapes.

2.3 SOIL MIX TYPE B

General: Provide soil mix type equal to Sand-Soil Blend 80-20 as supplied by Australian Native Landscapes.

2.4 SOIL MIX TURF

General: Provide soil mix type equal to Turf Underlay as supplied by Australian Native Landscapes.

2.5 STRUCTURAL SOIL

Types

General: Provide structural soil types to the **Structural soil type table**.

Structural soil type table

Type	Description	Fertiliser	Depth
Structural soil 20 mm	75% 20 mm crushed river gravel 25% filler soil of 1 part screeded dolomite to 1 part screeded sandy loam	Trace element mix: 300 g/m^3 Potassium nitrate: 500 g/m^3 Ammonium nitrate: 500 g/m^3	100 mm

Type	Description	Fertiliser	Depth
		Superphosphate: 500 g/m^3 Ion sulphate: 1.5 kg/m^3 8/9 month Controlled Release: 2 kg/m^3 Gypsum: 500 g/m^3 Magnesium sulphate: 400 g/m^3 Magrilime: 600 g/m^3	
Structural soil 40 mm	80% 40 mm basalt aggregate 20% filler soil of 1 part screeded dolomite to 1 part screeded sandy loam	Trace element mix: 300 g/m^3 Potassium nitrate: 500 g/m^3 Ammonium nitrate: 500 g/m^3 Superphosphate: 500 g/m^3 Ion sulphate: 1.5 kg/m^3 8/9 month Controlled Release: 2 kg/m^3 Gypsum: 500 g/m^3 Magnesium sulphate: 400 g/m^3 Magrilime: 600 g/m^3	Varies

3 EXECUTION

3.1 PREPARATION

Vegetative spoil

Spoil suitable for mulch or spreading for bushland restoration: Spread freshly harvested native plant biomass, free of weed propagules.

Unsuitable material: Remove vegetative spoil from site. Do not burn.

Embankment stabilisation

General: Where necessary to prevent erosion or soil movement, stabilise embankments.

Method: Either matting overlay or hydromulching.

Matting generally: Biodegradable fibre reinforced with lightweight polymer mesh. Provide lightweight material for seeding, medium or heavy weight material for planting.

Matting in high erosion zones: Flexible carbon black UV stabilised interwoven nylon mesh.

Matting installation: Sow before matting is installed, where sowing is required. Plant after matting is installed, where planting is required. Peg the matting into 300 x 300 mm anchor trenches at top and bottom, backfill the trenches with soil and compact.

Matting pegs: U-shape galvanized steel, at 1000 x 1000 mm intervals generally, 250 mm at overlaps.

3.2 ROCK WORK

Existing rock

General: Protect existing rock, rock shelves and rock outcrops from mechanical damage, surface defacement and other works.

Rock surfaces: Report damage or defacement occurring to any rock faces during the course of the Works.

Replacement: If restoration is not feasible repair the rock face with replaced rocks imported or taken from the site.

New rock work

General: Place rocks while ground formation work is being carried out. Provide site rock, otherwise provide imported rock.

Bury rock two thirds by volume or as appropriate for effective erosion control, with weathered faces exposed. Protect the weathered faces from damage.

Site rock: Stockpile for future placement and accessibility for lifting. Dispose of other rock off site.

Imported rock: Provide rock which has been selected before delivery.

3.3 EARTH MOUNDS

Construction

Placing: Place clean filling in layers approximately 150 mm thick compacted to 85% of the dry density ratio of the surrounding soil as determined by AS 1289.5.4.1. Minimise slumping and further internal packing down.

Edges: Construct changes in grade over a minimum width of 500 mm to smooth, gradual and rounded profiles with no distinct joint.

Existing trees: Maintain the natural ground level under the canopy.

Pipes, culverts and associated structures: Construct mounding to avoid unbalanced loading.

3.4 SUBSOIL

Ripping

General: Rip parallel to the final contours wherever possible. Do not rip when the subsoil is wet or plastic. Do not rip within the dripline of trees and shrubs to be retained.

Ripping depths: Rip the subsoil to the following typical depths:

- Compacted subsoil: 300 mm.
- Heavily compacted clay subsoil: 450 mm.

Planting beds

Excavated: Excavate to bring the subsoil to at least 300 mm below finished design levels. Shape the subsoil to fall to subsoil drains where applicable. Break up the subsoil to a further depth of 100 mm.

Unexcavated: Remove weeds, roots, builder's rubbish and other debris. Bring the planting bed to 75 mm below finished design levels.

Cultivation

Minimum depth: 150 mm, unless nominated on the design drawings.

Services and roots: Do not disturb services or tree roots and if necessary cultivate these areas by hand.

Cultivation: Thoroughly mix in materials required to be incorporated into the subsoil. Cultivate manually within 300 mm of paths or structures. Remove stones exceeding 25 mm, clods of earth exceeding 50 mm, and weeds, rubbish or other deleterious material brought to the surface during cultivation. Trim the surface to design levels after cultivation.

Additives

General: Apply additives after ripping or cultivation and incorporate into the upper 100 mm layer of the subsoil, in accordance with the soil test recommendations.

Gypsum: Incorporate at the rate of 0.25 kg/m^2.

Herbicide: Before spreading topsoil apply and herbicide treatment, in accordance with the soil test recommendations.

3.5 TOPSOIL

Site topsoil preparation

Screeding: By a power hydraulic screen capable of handling 100 tonne per hour, with sieves grading from 20 mm to 15 mm.

Waste: Remove from site all clay lumps, balled compacted particles greater than 20 mm, stones and trash foreign to the normal composition of soil.

Contamination: If diesel oil, cement or other phytotoxic material has been spilt on the site topsoil, excavate the contaminated soil and dispose of it off the site.

Admixtures: During the screening process add the following:

- 15% by weight coarse sand minimum particle size 0.2 mm.
- Ameliorants if recommended in the soil tests.

Additives program: 8 weeks before stolonizing or turfing.

Placing topsoil

Site topsoil: Do not incorporate site topsoil into the works until soil testing certification has been approved. Remove unauthorised material from the site.

General: Spread the topsoil on the prepared subsoil and grade evenly, making the necessary allowances to permit the following:

- Required finished levels and contours may be achieved after light compaction.
- Grassed areas may be finished flush with adjacent hard surfaces such as kerbs, paths and mowing strips.

Spreading: On steep batters, if using a chain drag, ensure there is no danger of batter disturbance.

Finishing: Feather edges into adjoining undisturbed ground.

Consolidation

General: Compact lightly and uniformly in 150 mm layers. Avoid differential subsidence and excess compaction and produce a finished topsoil surface which has the following characteristics:

- Finished to design levels.
- Smooth and free from stones or lumps of soil.
- Graded to drain freely, without ponding, to catchment points.
- Graded evenly into adjoining ground surfaces.
- Ready for planting.

Topsoil depths

General: Unless nominated on the design drawings, spread topsoil to the following typical depths:

- Excavated planting areas: If using organic mulch, 225 mm. If using gravel mulch, 250 mm.
- Irrigated grassed areas generally: 150 mm.
- Irrigated grassed areas, heavy use (e.g. playing fields, playgrounds, public parks): 200 mm.
- Non-irrigated grass areas: 100 mm.
- Earth mounds:
  . Mass planted surfaces: 300 mm.
  . Grassed surfaces: 100 mm.
- Top dressing: 10 mm.

Surplus topsoil

General: Dispose of surplus topsoil off site.

3.6 STRUCTURAL SOIL

Preparation

Existing soil: Remove.

Subsoil: Break up the surface and shape to drains. Remove rock.

Drainage: To the Engineering documentation.

Construction

Spreading: Maintain a self draining surface.

Compaction: To the Engineering documentation.

Protection: Limit the size of compaction equipment or compact by hand to prevent damage.

Moisture content: Adjust the moisture content at the time of works to 12.5% of the optimum moisture content to AS 1289.5.4.1.

Contaminated structural soil: Excavate and dispose off site.

Surplus structural soil: Remove.

0252 LANDSCAPE – SOFT SURFACES

1 GENERAL

1.1 RESPONSIBILITIES

General
General: Provide soft surfaces for landscaping as documented.

1.2 CROSS REFERENCES

General
Requirement: Conform to the following:
- *General requirements*.
- *Landscape – soils.*
- *Landscape – irrigation.*
- *Landscape – establishment.*
- *Landscape – maintenance.*

1.3 INSPECTION

Notice
Inspection: Give notice so inspection may be made of the following
- Clearing completed.
- Setting out completed.
- Grassing bed prepared before turfing, seeding, or temporary grassing.
- Grassing or turfing completed.

1.4 SUBMISSIONS

Samples
General: Submit representative samples of each material, packed to prevent contamination and labelled to indicate source and content.

Suppliers
Statements: Submit statements from suppliers, giving the following, where applicable:
- Particulars of the supplier's experience in the required type of work.
- Production capacity for material of the required type and quantity.
- Lead times for delivery of the material to the site.

Materials
Supplier's data: Submit supplier's data including the following:
- Material source of supply.

Execution
Program: Submit a work program in the form of a bar chart, for the landscape works.

Maintenance program: Submit a proposed planting maintenance program.

Material storage on site: Submit proposal.

2 PRODUCTS

2.1 GRASS

Seed
Mixtures: Provide seed mixtures which are thoroughly pre-mixed with a bulking material such as safflower meal. Deliver to the site in bags marked to show weight, seed species and supplier's name. Provide fresh, clean, uncoated new seed. Do not provide wet, mouldy, or otherwise impaired seed.

Purity (minimum): 98%.

Germination viability (minimum): 86%.

Age (maximum) from date of harvest: 2 years.

Turf

Supplier: Obtain turf from a specialist grower of cultivated turf.

Quality: Provide turf of even thickness, free from weeds and other foreign matter.

Grass reinforcing

Grass pavers: Lightweight interlocking plastic cellular paving system capable of sustaining pedestrian and occasional vehicular traffic including emergency vehicles.

2.2 FERTILISER

Fertiliser

General: Provide proprietary fertilisers, delivered to the site in sealed bags marked to show manufacturer or vendor, weight, fertiliser type, N:P:K ratio, recommended uses and application rates.

3 EXECUTION

3.1 PREPARATION

Weed eradication

Herbicide: Eradicate weeds using environmentally acceptable methods, such as a non-residual glyphosate herbicide in any of its registered formulae, at the recommended maximum rate.

Manual weeding: Regularly remove, by hand, rubbish and weed growth throughout grassed, planted and mulched areas. Remove weed growth from an area 750 mm diameter around the base of the trees in grassed areas. Continue eradication throughout the course of the works and during the planting establishment period.

Vegetative spoil

Disposal: Remove vegetative spoil from site. Do not burn.

3.2 TURFING

Supply

Elapsed time: Deliver the turf within 24 hours of cutting, and lay it within 36 hours of cutting. Prevent it from drying out between cutting and laying. If it is not laid within 36 hours of cutting, roll it out on a flat surface with the grass up, and water as necessary to maintain a good condition.

Laying

General: Lay the turf in the following manner:

- In stretcher pattern with the joints staggered and close butted.
- Parallel with the long sides of level areas, and with contours on slopes.
- To finish flush, after tamping, with adjacent finished surfaces of ground, paving edging, or grass seeded areas.

Strip turf laying: Close butt the end joints and space the strips 300 mm apart. Apply a layer of top dressing between the strips of turf. Finish with an even surface.

Tamping

General: Lightly tamp to an even surface immediately after laying. Do not use a roller.

Pegging

Stabilising: On steep slopes peg the turf to prevent downslope movement. Remove the pegs when the turf is established.

Fertilising

General: Mix the fertiliser thoroughly into the topsoil before placing the turf. Apply lawn fertiliser at the completion of the first and last mowings, and at other times as required to maintain healthy grass cover.

Watering

General: Water immediately after laying until the topsoil is moistened to its full depth. Continue watering to maintain moisture to this depth.

Mowing

Height: Mow to maintain the grass height within the required range. Do not remove more than one third of the grass height at any one time. Carry out the last mowing within 7 days before the end of the planting establishment period. Remove grass clippings from the site after each mowing.

Turfing
General: Lay turfing equal to Sir Walter DNA Certified Buffalo.

Maintenance
General: Maintain turfed areas until the attainment of a dense continuous sward of healthy grass over the whole turfed area, evenly green and of a consistent height.

Failed turf: Lift failed turf and relay with new turf.

Levels: Where levels have deviated from the design levels after placing and watering, lift turf and regrade topsoil to achieve design levels.

Top dressing
General: When the turf is established mow, remove cuttings and lightly top dress to a depth of 10 mm. Rub the dressing well into the joints and correct any unevenness in the turf surface.

3.3 GRASS REINFORCING

Installation
Preparation: Excavate to required levels and compact subgrade.

Base course: Place and compact either of the following:

- Non calcareous free draining washed sand comprising 80% 0.1 mm to 1.0 mm diameter.
- 1.0 mm to 5.0 mm gravel aggregate.

Base course depth:

- Pedestrian walkways: 100 mm.
- Passenger vehicles: 150 mm.
- Heavy vehicles: 250 mm.

Growing media: Place and interlock grass pavers, and spread an 80% sand and 20% organic sandy soil mix.

Height of growing media over the pavers:

- Turf: 5 mm.
- Hydroseeded: 15 mm.

Protection: Exclude traffic until the root system becomes established and anchored to the base course.

0253 LANDSCAPE – PLANTING

1 GENERAL

1.1 RESPONSIBILITIES

General

General: Provide planting as documented.

1.2 CROSS REFERENCES

General

Requirement: Conform to the following:

- *General requirements*.
- *Landscape – soils.*
- *Irrigation.*
- *Landscape – plant procurement.*
- *Landscape – establishment.*
- *Landscape – maintenance.*

1.3 INSPECTION

Notice

Inspection: Give notice so inspection may be made of the following:

- Setting out completed.
- Plant holes excavated and prepared for planting.
- Plant material set out before planting.
- Planting, staking and tying completed.
- Completion of planting establishment work.

1.4 SUBMISSIONS

Materials

Supplier's data: Submit supplier's data including the following:

- Material source of supply.

Compost: Submit a certificate of proof of compost pH value.

Execution

Program: Submit a work program in the form of a bar chart, for the landscape works.

Maintenance program: Submit a proposed planting maintenance program.

Planting machine: If a planting machine is to be used as an alternative to hand planting, submit proposal.

Spraying: Submit proposal.

Plants – open rooted stock: If open rooted stock is to be used, submit proposal.

Material site storage: Submit proposal.

Samples

General: Submit representative samples of each material, packed to prevent contamination and labelled to indicate source and content.

Bulk materials: Submit a 5 kg sample of each type specified. Submit bulk material samples, with required test results, at least 5 working days before bulk deliveries.

2 PRODUCTS

2.1 SOIL CONDITIONING COMPOST AND FERTILISER

Compost

General: Provide mature soil conditioning compost free from harmful chemicals, grass and weed growth, fit for purpose and suitable for establishment and longer term survival of the nominated plant material. Apply at an application rate that accounts for the immediate fertilizer equivalence of the compost as part of the overall fertilizer management schedule.

Standard: Particle size as a soil conditioner, pH, physical and chemical contaminants to AS 4454.

Soil conditioning properties

Wettability: ≤ 2 to AS 3743 Table 2.1 as tested to Appendix C.

Total water holding capacity: ≥ 40 to AS 3743 Table 2.1 as tested to Appendix B.

Nitrogen draw down index: ≥ 0.7 to AS 3743 Table 2.1 as tested to Appendix E.

Fertiliser equivalence properties

Standard: To the methods specified in Raymond and Higginson 1992, *Australian Laboratory Handbook of Soil and Water Chemical Methods* for nitrate N, total N or total Kjeldahl N, total P and bicarbonate-extractable P, and extractable K.

Fertiliser

Delivery: Provide proprietary fertilisers, delivered to the site in sealed bags marked to show manufacturer or vendor, weight, fertiliser type, N:P:K ratio, recommended uses and application rates, fit for purpose and suitable for establishment and longer term survival of the nominated plant material.

2.2 MULCH

Mulch

General: Provide mulch which is free of deleterious and extraneous matter such as soil, weeds and sticks. Do not include fine mulch.

Standard:

- Particle size, physical and chemical contaminants: To AS 4454.
- pH, electrical conductivity, ammonium, chlorine and other nutrients: To AS 3743.

Organic mulches: Free of stones.

Mulch material: Brush chippings and leaf litter recovered from site clearing, if available; otherwise, pine bark.

Organic mulch types

Brush chippings and leaf litter: Vegetative material processed through a chipper to pieces not larger than 75 x 50 x 15 mm as follows:

- Material permitted: Leaf matter and tree loppings from Eucalyptus, Tristania and Pinus species.
- Material not permitted: Leaf matter and tree loppings from privet, camphor laurel, coral tree, poplar, willow, and noxious weeds.

Pine bark: From mature trees, graded in size from 50 x 50 x 25 mm to 25 x 15 x 15 mm, free from wood slivers.

Pine flake: Pinus species sapwood slivers of size range 250 x 25 mm to 30 x 3 mm, including fragments of pine bark.

Straw: Cereal straw, wood fibre, or other suitable vegetative material (but not meadow hay) free from weeds and seeds, applied in conjunction with a bitumen emulsion or polymer binder.

Inorganic mulch types

Washed river pebble: Uniform size or graded material in the size range 6 – 10 mm.

Decomposed granite gravel: Uniform size or graded material in the size range 5 – 20 mm, of uniform colour and low plasticity. Keep clear of plant stems.

Crushed quartz: Uniform size or graded material in the size range 5 – 20 mm, of uniform colour.

Marble chip gravel: Uniform size or graded material in the size range 5 – 20 mm, of uniform colour.

Slate: Plum slate slivers in the size range 5 – 25 mm.

Shale: Uniform size or graded material, no particles smaller than 0.1 mm diameter.

Scoria: Uniform size or graded material.

2.3 MULCH TYPE

General: Provide mulch equal to Droughtmaster Mulch as supplied by Australian Native Landscapes.

3 EXECUTION

3.1 PREPARATION

Weed eradication

Herbicide: Eradicate weeds using environmentally acceptable methods, such as a non-residual glyphosate herbicide in any of its registered formulae, at the recommended maximum rate.

Removal: Regularly remove, by hand, rubbish and weed growth throughout grassed, planted and mulched areas. Remove weed growth from an area 750 mm diameter around the base of the trees in grassed areas. Continue eradication throughout the course of the works and during the planting establishment period.

Vegetative spoil

Disposal: Remove vegetative spoil from site. Do not burn.

3.2 PLANTING

Individual plantings in grassed areas

Method: Excavate a hole to twice the diameter of the root ball and at least 100 mm deeper than the root ball. Break up the base of the hole to a further depth of 100 mm, and loosen compacted sides of the hole to prevent confinement of root growth.

Locations

General: If it appears necessary to vary plant locations and spacings to avoid service lines, or to cover the area uniformly, or for other reasons, give notice.

Planting conditions

Weather: Do not plant in unsuitable weather conditions such as extreme heat, cold, wind or rain. In other than sandy soils, suspend excavation when the soil is wet, or during frost periods.

Watering

Timing: Thoroughly water the plants before planting, immediately after planting, and as required to maintain growth rates free of stress.

Placing

Method: Remove the plant from the container with minimum disturbance to the root ball. Root prune to ensure all circling roots have been either severed or aligned radially into the surrounding soil. Ensure that the root ball is moist and place it in its final position, in the centre of the hole and plumb, and with the top soil level of the plant root ball level with the finished surface of the surrounding soil. Compact lightly so as to minimise subsidence without compacting the backfill. Avoid mixing mulch with topsoil.

Fertilising

Pellets: In planting beds and individual plantings, place fertiliser pellets around the plants at the time of planting.

Backfilling

General: Backfill with topsoil mixture. Lightly tamp and water to eliminate air pockets. Ensure that topsoil is not placed over the top of the root ball, so that the plant stem remains the same height above ground as it was in the container.

Watering basins for plants in grass

Method: Except in irrigated grassed areas and normally moist areas, construct a watering basin around the base of each individual plant, consisting of a raised ring of soil capable of holding at least 10 L.

3.3 MULCHING

Placing mulch

General: Place mulch to the required depth, clear of plant stems, and rake to an even surface flush with the surrounding finished levels. Spread and roll mulch so that after settling, or after rolling, it is smooth and evenly graded between design surface levels sloped towards the base of plant stems in plantation beds, and not closer to the stem than 50 mm in the case of gravel mulches.

In mass planted areas: Place after the preparation of the planting bed but before planting and other work.

In smaller areas (e.g. planter boxes): Place after the preparation of the planting bed, planting and other work.

Extent: To surrounds of plants planted in riplines and grass areas, provide mulch to 750 mm diameter.

Depths: Spread organic mulch to a depth of 75 mm, and gravel mulch to a depth of 50 mm.

3.4 SPRAYING

Notice

General: Immediately give notice of evidence of insect attack or disease amongst plant material.

Spraying

Product: Where required, spray with insecticide, fungicide or both.

3.5 STAKES AND TIES

Stakes

Material: Hardwood, straight, free from knots or twists, pointed at one end.

Installation: Drive stakes into the ground at least one third of their length, avoiding damage to the root system.

Stake sizes:

- For plants ≥ 2.5 m high: Three 50 x 50 x 2400 mm stakes per plant.
- For plants 1 – 2.5 m high: Two 50 x 50 x 1800 mm stakes per plant.
- For plants < 1 m high: One 38 x 38 x 1200 mm stake per plant.

Ties

General: Provide ties fixed securely to the stakes, one tie at half the height of the main stem, others as necessary to stabilise the plant. Attach ties loosely.

Tie types:

- For plants ≥ 2.5 m high: Two strands of 2.5 mm galvanized wire neatly twisted together, passed through reinforced rubber or plastic hose, and installed around stake and stem in a figure of eight pattern.
- For plants < 2.5 m high: 50 mm hessian webbing stapled to the stake.

Marker stakes

Material: Timber offcuts 25 x 25 x 1200 mm. Dip the top 200 mm in white paint.

Installation: Drive firmly into the ground at least 300 mm from the plant. Do not tie to the plant.

Location of marker stakes:

- Trees in grass: Mark each tree.
- Ripline planting areas: Mark each ripline at every fifth plant along the line.

Trunk protection

Collar guards: 200 mm length of 100 mm diameter agricultural pipe split lengthways.

3.6 COMPLETION

Product certification

Certification: Submit the supplier’s written statement certifying that plants are true to the required species and type and free from diseases, pests and weeds.

Maintenance manual

General: Submit recommendations for maintenance of plants.

Cleaning

Stakes and ties: Remove those no longer required at the end of the planting establishment period.

Temporary fences: Remove temporary protective fences at the end of the planting establishment period.

0254 IRRIGATION

1 GENERAL

1.1 RESPONSIBILITIES

General

General: Provide automatically controlled fixed irrigation systems as follows:

- Achieve the documented flow rates over the area to be irrigated.
- Meet statutory requirements for backflow prevention.

Location: All landscape areas, including individual tree plantings, mass garden beds, lawn areas.

1.2 CROSS REFERENCES

General

Requirement: Conform to the following:

- *General requirements*.
- *Landscape – soft surfaces.*
- *Landscape – planting.*
- *Landscape – establishment.*
- *Landscape – maintenance.*
- Engineering documentation.

1.3 STANDARDS

Water supply

General: To AS/NZS 3500.1.

1.4 INSPECTION

Notice

Inspection: Give notice so that inspection may be made at the following stages:

- Excavated surfaces ready for installation.
- Concealed or underground services ready for backfilling.

1.5 SUBMISSIONS

Shop drawings

General: Submit drawings and schedules showing the layout and details of the system, including the following:

- Micro-irrigation stake layout.
- Irrigation controller cabinets.

2 PRODUCTS

2.1 AUTOMATIC CONTROL VALVES

General

Type: 24 V solenoid actuated hydraulic valves with flow control and a maximum operating pressure rating ≥ 1 MPa.

Construction: Stainless steel bonnet holding down bolts and internal metal parts of stainless steel, able to be serviced without removal from the line.

Isolating valve: Provide a gate valve of the same size immediately upstream of each automatic control valve.

Housing: House both valves in the same valve box.

2.2 FIXED LOCATION SYSTEMS

Heads

Performance: Provide heads that:

- Maintain a preset arc of throw.
- Are adjustable for radius during watering operations
- Are appropriately vandal-resistant.

Pop-up type heads:

- Type: Designed to rise > 50 mm out of their housings under supply pressure.
- Construction: Provide wiper seals, stainless steel return springs and removable internal filters.
- Playing fields: Provide covers designed and constructed to prevent injury to players.

Sprinkler heads:

- Type: Gear driven and spray sprinklers which have matched precipitation rates for the various areas of throw.
- Flow rate: Adjustable down to zero.

Impact sprinkler heads: Bronze bodies in high impact plastic cases with drainage holes.

Valves

Check valves: If a rotating head is more than 300 mm below the highest head on the same automatic valve, fit an internal or external anti-drain check valves to prevent low head drainage.

Pressure regulating valves: At off-take points provide pressure regulating valves as follows:

- Adjustable between 100 and 700 kPa.
- Complete with 800 µm filter sized to suit the flow and installed immediately upstream from the pressure regulating valve
- Installed with gate valves upstream from the filter and downstream from the pressure regulating valve.
- Fitted for backflow prevention.
- Mount the assembly in an accessible position in a valve box, access pit or adjacent building.

Soil moisture sensors

Type: Fixed ceramic moisture sensors.

Connection: To the irrigation controller via moisture control units.

Irrigation controllers

Construction: Provide automatic controllers that are easily programmed and include the following:

- Manual cycle and individual control valve operation.
- Manual on/off operation of irrigation without loss of program.
- ≥ 4 on/off cycles per day.
- Day omit (e.g. every second day, third day etc.).
- 240 V input and 24 V output capable of operating 2 control valves simultaneously.
- ≥ 24 hour battery program backup.
- Power surge protection.
- Cabinet: In external locations mount in a lockable cabinet minimum IP 54 to AS 60529.
- Electrical connection: Provide 240 V supply and isolating switch at the controller.

2.3 MICRO-IRRIGATION SYSTEMS

Components

Polyethylene micro-irrigation pipe:

Fittings: Barbed fittings rated for the pressure class of the pipe, fastened with ratchet type clamps.

Valve boxes: In each box provide:

- Automatic control valve.
- Isolating valve.
- Filter: 200 µm.
- Pressure reducing valve with 170 kPa outlet pressure.

2.4 DRIP IRRIGATION SYSTEMS

Integrated drip line systems
Construction: Polyethylene tubing with integral drippers inserted into the tube during manufacture.

Discrete drip emitter systems
Tubing: Polyethylene micro-irrigation pipe.

Drippers: Turbulent flow types, easily dismantled for cleaning.

Emitters
If the difference in elevation between the control box and all emitters is:
- < 1.5 m: Pressure compensated or non-pressure compensated type.
- ≥ 1.5 m: Pressure compensated only.

Fittings
Type: Barbed fittings rated for the pressure class of the pipe, fastened with ratchet type clamps.

Valve boxes
- In each box provide:
- Automated control valve.
- Isolating valve.
- Filter: 100 µm.
- Pressure reducing valve with 170 kPa outlet pressure.

2.5 VALVE BOXES

General
Construction: UV-resistant high impact plastic with high impact snap lock plastic cover.

Location: Support on bricks at each side. Install with top:
- Within playing fields: 150 mm below the surface.
- Other locations: At finished ground level.

3 EXECUTION

3.1 FIXED LOCATION SYSTEMS

Control wiring
General: Connect the automatic control valves and soil moisture sensors to the controller as follows:
- Cable type: Double insulated.
- Cable runs: Underground and laid alongside piping where possible.
- Connectors: Waterproof.
- Jointing: loop cables and join only at valves, sensors and controllers.
- Movement provision: Provide expansion loops at changes of direction and at joints.

Quick coupling
General: Provide DN 20 double lugged bronze quick coupling valves with neoprene seats mounted on DN 20 copper risers offset at least 150 mm from the supply pipe. Install in valve boxes.

Heads
Impact sprinkler heads: Provide granular fill for at least 75 mm around the base of the case.

Risers: Mount as follows:
- Above ground heads: Mount on fixed risers.
- Galvanized steel risers: Set in 300 x 300 x 200 mm deep concrete blocks.
- In-ground heads: Mount on reticulated risers.

3.2 MICRO-IRRIGATION SYSTEMS

General
Connections: Connect micro-tube laterals with proprietary push in or screw in fittings.

Drippers: Connect directly into piping or provide appropriately sized micro-tubes

Microsprays: Mount microsprays 300 mm above ground on stakes and connect to the piping with appropriately sized micro-tubes.

Piping: Lay polyethylene pipe on finished ground surface under planting bed mulch and anchor at 1.5 m maximum intervals with U-shaped stakes.

3.3 DRIP IRRIGATION SYSTEMS

General

Discrete drippers: Connect directly into piping or provide appropriately sized micro-tubes.

Piping: Lay polyethylene pipe on finished ground surface under planting bed mulch and anchor at 1.5 m maximum intervals with U-shaped stakes.

Air release valves: Provide at the highest point in each section to drain the system when flow stops.

3.4 COMPLETION

General

On completion:

- Flush system thoroughly, check heads, sprays and drippers and clean if blocked.
- Clean strainers.
- Adjust for even distribution with no dry areas.

0255 LANDSCAPE – PLANT PROCUREMENT

1 GENERAL

1.1 RESPONSIBILITIES

General

Requirement: Provide plants that have been grown to a standard that allows them to establish rapidly and grow to maturity.

Maintenance: Encourage and maintain healthy growth for the duration of the contract.

Program: Provide a suitable irrigation, pruning, fertiliser and monitoring program for all plant materials held by the supplier. Take any other precautions required to safeguard the health and well being of all plant materials before and including their delivery to site.

Principal supplied: Arrange delivery and transportation of principal supplied plant stock to site.

1.2 CROSS REFERENCES

General

Requirement: Conform to the following:

- *General requirements*.
- *Landscape – planting.*

1.3 STANDARD

General

Tree supply: Follow the guidance given in NATSPEC Guide*: Specifying Trees – a guide to assessment of tree quality* (Clark R. 2003).

1.4 INTERPRETATION

Definitions

General: For the purposes of this worksection the definitions given below apply:

- Calliper: The stem or trunk diameter at a nominated point. Generally measured at 300 mm above ground.
- Destructive inspection. The washing away of all soil from a rootball to allow inspection of rootball development.
- External inspection: Tree inspection without washing away of soil from the rootball which assesses the following:
  - The tree's ability to be self-supporting.
  - Its balance.
  - Its root development.
- Investigative inspection: Any method of root inspection that involves the washing away of all or portions of the soil from the rootball to expose a section or all the roots.
- Large trees: Trees grown in containers ≥ 20 L, and ex-ground trees of size index ≥ 35.
- Partial inspection: A method of exposing a section of a root system to enable inspection of root development by washing the soil away in a wedge-shaped section from the stem to the extremity of the rootball. This soil can be gently replaced so the tree is not damaged.
- Size index: Product of height (m) x calliper (mm).
- Small trees or shrubs: Trees or shrubs grown in containers < 20 L (other than tubes or plant cells), and ex-ground trees of size index < 35.
- Tubes or plant cells: Trees or shrubs grown in small containers or cells in trays with a height:diameter ratio > 3:2, typically < 0.75 L.

1.5 CONTINGENCY PLANT MATERIAL

Replacement

Provision: Anticipate replacement of failures on site.

Amount: 15% above any normal allowances made in the nursery trade for anticipated losses in the course of propagation and the growing on of plant materials.

Delivery: Supply to the site upon 7 days notice to the supplier.

Holding: Until the contingency plant material is delivered to site or until the expiry of twelve months from the date of completion of the works, whichever is the earlier. The supplier is not entitled to holding costs for contingency plant material.

Surplus plant material: To remain the property of the supplier.

1.6 PRECOMPLETION TESTS

Production tests

External tree inspection:

- Frequency: Inspect trees before shipment.
- Inspector: Supplier.
- Sampling: To the **External tree inspection sampling table** for each batch of trees. Select sample trees at evenly distributed intervals within each batch.

External tree inspection sampling table

Number of trees per batch	Number of trees to sample
0 – 20	4
21 – 50	8
51 – 100	15
101 – 500	15 for the first 100 + 5% of the balance of the order
501 – 2000	35 for the first 500 + 2% of the balance of the order
2001+	65 for the first 2000 + 1% of the balance of the order

Investigative tree inspection:

- Frequency: Inspect trees before shipment.
- Inspector: Qualified person authorised by the contract administrator.
- Destructive inspection: Use for trees with rootballs/containers ≤ 200 mm.
- Allowance: Allow for sample trees in addition to quantity ordered.
- Partial inspection: Use for trees with rootballs/containers > 200 mm.
- Sampling: To the **Investigative tree inspection sampling table** for each batch of trees. Select sample trees at evenly distributed intervals throughout each batch.

Investigative tree inspection sampling table

Number of trees per batch	Number of trees to sample
0 – 20	1
21 – 50	2
51 – 100	4
101 – 500	4 for the first 100 + 2% of balance of order
501 – 2000	12 for first 500 + 1% of balance of order
2001+	27 for the first 2000 + 0.5% of balance of order

1.7 SUBMISSIONS

Plant provenance

Locality: Provide written certification that all plant material has been grown from locally provenanced stock. If this is not achievable give notice.

Species: Provide written certification that all plant material is true to the required species and type.

Test results

General: Complete and return the **Tree inspection form** for each batch inspected.

Rejection: Non-compliance may lead to rejection of the entire batch.

Corrective action: Comply with corrective action procedures for each order as instructed.

Substitution: If non-complying trees are proposed, submit a proposal in writing.

Authentication: Supply a copy of the written approval of substitution with any non-complying trees.

Forward order contracts

Reports: Complete regular reports using the pro forma **Tree inspection form** provided in **Selections**. Include checks against specification requirements.

- Photographs: Provide current colour copies with date verification.
- Inspection: Complete and return the attached pro-forma **Tree inspection form** before despatch of every batch, and at the following frequencies:
  . Inspections: At 3 monthly intervals.
- Reports: At time of inspections.

Photographic examples

Requirement: Submit photographic examples as follows:

- All palm species.
- 100, 200, 400 L plant species.
- Specimen plant species.

Program: Within fourteen (14) days of the date of contract.

Clarity: Sufficient to be able to ascertain the species, size and quality of a single specimen of the subject plant.

Identification: Provide photographs as follows:

- In colour.
- With a clearly identifiable scale reference located in the same plane as the plant stem or trunk.
- Labelled with plant species name.

Progress reports

Content: A detailed resume of the quantities, growth, general health and geographic location of the complete inventory of plant material for the works.

Purpose: To evaluate progress payments under the general conditions of contract.

Program: Monthly.

Accreditation

Submit evidence of accreditation.

1.8 INSPECTION

Notice – off site

Inspection: Give notice so that inspection may be made of the following:

- Immediately prior to the acceptance of tender to view representative samples of all stock scheduled.
- After eight weeks of the growing on period.
- At 80% completion of stocking of plant material.
- At completion of stocking of plant material, deemed to be as close as practical to 100% in terms of species and numbers.
- At the date of commencement of delivery.
- At a time to be determined to assess potting on procedures, if necessary.

2 PRODUCTS

2.1 BALANCE

Small trees and shrubs

Conformance at inspection: To balance (small plants) assessment requirements.

Balance (small plants) assessment requirements:

- Tubes or plant cells: Height above soil level must be between 1.5 and 2.5 times the height of the tube or plant cell.

- Trees and shrubs in containers < 20 L (other than tubes or plant cells) or ex-ground trees of size index < 35 (e.g. 1.4 m high x 25 mm calliper); height must fall within the range indicated for the container size in the Small container-grown plant table.
- Containers/rootballs (other than tubes or plant cells) must remain flat on the ground when the stem, held at 80% of height above ground, is deflected 30º from the vertical, side to side.

Exempt: Species that naturally produce hard inflexible wood in the early stages of their development.

Small container-grown plant table

Container size or minimum rootball diameter	**Height range (m)**	
	Thin-stemmed species	**Thick-stemmed species**
Tubes or plant cells	Height between 1.5 and 2.5 x the height of the container	
150 mm (1.8 L)	0.4 – 0.6	0.3 – 0.5
170 mm (2.6 L)	0.5 – 0.7	0.4 – 0.6
200 mm pot (4 L)	0.7 – 0.9	0.6 – 0.8
200 mm bag (5 L)	0.8 – 1.0	0.7 – 0.9
250 mm (8 L)	1.0 – 1.2	0.8 – 1.0
300 mm (15 L)	1.2 – 1.5	1.0 – 1.2

Large trees

Conformance at inspection: To balance (large trees) assessment requirements.

Balance (large trees) assessment requirements:

- For trees grown in containers ≥ 20 L, the size index must lie within the range for the nominal container size shown in the **Common container volumes table**.
- Ex-ground trees with a size index ≥ 35 (e.g. 1.4 m high x 25 mm calliper) must have rootball diameters ≥ the minimum rootball diameters shown in the **Ex-ground trees table**.

Common container volumes table

Size index	**Nominal container volume (L)**	**Size index**	**Nominal container volume (L)**
26-33	20	371-480	450
32-41	25	412-518	500
45-58	35	453-587	550
57-74	45	495-640	600
77-99	60	533-716	700
83-107	75	632-818	800
111-143	100	711-921	900
154-200	150	791-1023	1000
194-251	200	842-1089	1100
227-314	250	918-1188	1200
273-353	300	1148-1485	1500
289-373	350	1530-1980	2000
330-427	400	1913-2475	2500

Ex-ground trees table

Size index	**Minimum rootball diameter (mm)**	**Size index**	**Minimum rootball diameter (mm)**
36–55	350	341–383	850
56–72	400	384–429	900
73–106	450	430–530	1000
107–131	500	531–642	1100

Size index	Minimum rootball diameter (mm)	Size index	Minimum rootball diameter (mm)
132–156	550	643–732	1200
157–173	600	733–859	1300
174–228	650	860–1144	1500
229–249	700	1145–1507	1750
250–299	750	1508–1968	2000
300–340	800	1969–3075	2500

Photographs: Provide current colour copies with date verification.

2.2 GENERAL QUALITIES

Labelling

General: Clearly label individual plants and batches.

- Label type: To withstand transit without erasure or misplacement.

Health and vigour

Health: Supply plants with foliage size, texture and colour at time of delivery consistent with the size, texture and colour shown in healthy specimens of the nominated species.

Vigour: Supply plants with extension growth consistent with that exhibited in vigorous specimens of the species nominated.

Damage: Supply plants free from damage and from restricted habit due to growth in nursery rows.

Stress: Supply plants free from stress resulting from inadequate watering, excessive shade or excessive sunlight experienced at any time during their development.

Site environment: Supply plants that have been grown and hardened off to suit the conditions that could reasonably be anticipated to exist on site at the time of delivery.

Root development

Containers: Grow plants in their final containers for the following periods:

- Plants < 25 l size: > 6 weeks.
- Plants > 25 l size: > 12 weeks.

Freedom from pests and disease

Pests and disease: Supply plants with foliage free from attack by pests or disease.

Native species with a history of attack by native pests: Restrict plant supply to those with evidence of previous attack to < 15% of the foliage and ensure absence of actively feeding insects.

2.3 BELOW-GROUND QUALITIES – PLANTS

Root system

Requirement: Supply plant material with the root system:

- Well proportioned in relation to the size of the plant material.
- Conducive to successful transplantation.
- Free of any indication of having been restricted or damaged.

Root inspection: If inspection is by the removal of soil test as follows:

- For > 100 samples: Inspect 1%.
- For < 100 samples: Inspect 1 sample.

Sample plants: Replace.

Rejection: Root bound stock.

2.4 ABOVE-GROUND QUALITIES - TREES

Supply

Supply trees that:

- Are free from injury.
- Are self-supporting.

- Have the calliper at any given point on the stem greater than the calliper at any higher point on the stem.

Pruning

Clean stem height: < 40% of total tree height.

Pruning wounds

Extent: Restrict fresh (i.e. recent, non-calloused pruning wounds) to < 20% of total tree height.

Type: Ensure a clean-cut at the branch collar.

Diameter of wound: < 50% of the calliper immediately above the point of pruning.

Apical dominance

Species with an excurrent form: Supply trees with a defined central leader and the apical bud intact.

Crown symmetry

Crown distribution: Difference on opposite sides of the stem axis < 20%.

Stem structure

Species with excurrent form: Supply trees with a single stem roughly in the centre of the tree with any deviation from vertical < 15º.

Species with decurrent form: Supply trees where the central stem is not divided at any point lower than the clean stem height nominated, and that the stem junction at the point of division is sound.

All species: Ensure that branch diameter is less than or equal to one-half of the calliper immediately above the branch junction.

Included bark

General: Supply trees where the branch/stem bark ridges at junctions between stems and branches and between co-dominant stems are convex, except for species prone to include bark that are known to remain strong.

Trunk position

General: Supply trees with the distance from the centre of the trunk to the extremity of the rootball not varying by > 10%.

Compatibility of graft unions

General: Supply trees where the union between the scion and rootstock is sound for the entire perimeter of the graft, and the diameter of the scion immediately above the graft is equal to the diameter of the rootstock immediately below the graft (± 20%).

Indication of north

Trees in containers > 100 L or of size index > 140: Indicate the northerly aspect during growth in the nursery to withstand transit without erasure or misplacement.

2.5 BELOW-GROUND QUALITIES - TREES

Root division

Trees in containers ≤ 45 L or ex-ground trees with a size index ≤ 70: Primary division of roots at < 100 mm intervals.

Trees in containers > 45 L or ex-ground trees with a size index > 70: Primary division of roots within the outer 50% of the rootball at < 100 mm intervals.

Root direction

General: Ensure that roots, from the point of initiation, generally grow in an outwards (radial) or downwards direction, and that any deviation from the established direction < 45º.

Trees with a calliper at ground level < 40 mm: Ensure that the diameter of any nonconforming roots at the extremity of the rootball < 25% of the calliper.

Trees with a calliper at ground level ≥ 40 mm: Ensure that the diameter of any nonconforming roots at the extremity of the rootball < 10 mm.

Rootball occupancy

Soil retention: On shaking or handling the unsupported rootball at least 90% of the soil volume to remain intact.

Rootball depth

Rootball depth assessment for containers/rootballs ≥ 45 L or larger:

- Depth: ≤ maximum depth specified and no rootball (regardless of size) > 550 mm in depth.
- Diameter: ≥ depth.

Height of root crown
General: Ensure that root crown is at the surface of the rootball.

Non-suckering rootstock
Grafted cultivars/varieties: Supply trees grafted onto non-suckering rootstock.

3 EXECUTION

3.1 WARRANTIES

True-to-species
Parties: Supplier(s) to the principal.

Form: All the plants supplied under these works are true-to-species and type, and free of disease, fungal infection and/or any other impediment to their future growth and that they have been fully acclimatised for the conditions of the site.

Submission of warranty: At the time of each delivery.

Maintenance
Parties: Supplier(s) to the principal.

Form: Maintain all plant materials sourced and secured by the supplier throughout the procurement and pre-transplanting maintenance period. Cover the cost of purchase, labour, equipment, transport and materials to replace any losses, with plant materials of equivalent sizes and quality during the warranty period. Ensure that it is physically possible for any or all of the on site plant material to be successfully prepared and transplanted.

Warranty period:

- Commencement: The date of contract.
- Completion: To cease in respect of any particular plant material upon issue of a delivery notice issued by the contractor upon delivery to site.
- Earliest delivery date: One week after the date of contract.

4 SELECTIONS

4.1 TREE INSPECTION FORM

General

Date		Reference	
Purchaser			
Supplier		Inspected by (supplier/purchaser/agent)	
Species		Batch identification	
Number of trees in batch		Container/rootball size	
Height range		Calliper range	
Special requirements			

Above ground

Labelling	
Health and vigour	
Freedom from pests/disease	
Freedom from injury	
Self-supporting	
Stem taper	
Pruning	
Apical dominance	
Crown symmetry	
Stem structure	

Included bark	
Trunk position	
Compatibility of graft unions	
Indication of north	

Below ground

Inspection method used	
Number of trees in sample	
Root division	
Root direction	
Diameter nonconforming roots at rootball extremity	
Rootball occupancy	
Rootball depth	
Height of root crown	
Non-suckering rootstock	

Conformance with specification

Conforming	
Comments	
Name and signature (inspector)	

0256 LANDSCAPE – ESTABLISHMENT

1 GENERAL

1.1 RESPONSIBILITIES

General
Plant establishment: Maintain the contract area during the plant establishment period.

Program
Plant establishment period: For 3 months from installation of each soft landscaping element.

1.2 CROSS REFERENCES

General
Requirement: Conform to the following:
- *General requirements*.
- *Landscape – soils.*
- *Landscape – soft surfaces.*
- *Landscape – planting.*
- *Irrigation.*
- *Landscape – maintenance.*

1.3 INSPECTION

Notice
Inspection: Give sufficient notice so that inspection of the contract area may be made at the following:
- Date of installation of each soft landscaping element.
- Monthly intervals during the plant establishment period.
- Date of completion of the plant establishment period.

1.4 SUBMISSIONS

Monitoring program
General: Provide a monitoring program developed by a specialist monitoring consultant and incorporating the following:
- Photographic record including:
  . Colour photographs.
  . Documented monitoring locations and photograph angles.
- Reporting periods including photographic records at the following:
  . Before commencement of the works.
  . Date of installation of each soft landscaping element.
  . Monthly intervals during the plant establishment period.
  . Date of completion of the plant establishment period.
  . Benchmark definition based on remnant communities.
  . Replicated measurements over time and comparative analysis with regard to the benchmark.

Specialist consultant: Submit the name, qualifications including research papers and scientific publication details, and contact details of the specialist monitoring consultant.

Notice
Inspection: Provide two days notice of the following operations:
- Application of herbicide.
- Application of fertiliser.
- Watering.
- Each site maintenance visit.

Log book
Records: Log the following on a weekly basis:
- Description, time and method of application of toxic material.
- Maintenance work details.
- Inclement weather to verify inability to carry out work within the specified time frame.

Availability: Upon request.

Replacement plants
Species: Provide written certification that all plant material is true to the required species and type.

2 EXECUTION

2.1 GENERAL

Special instructions
Priority: If instructed by the contract administrator, attend to certain areas and procedures as a priority. Obtain approval for additional costs before commencement of works.

Reporting
Monthly report: Submit regular reports by the last Friday of each month:
- Of the general status of works.
- Include soil test results as required for the fertilising programs.
- Plant replacement requirements.

Incident reports: Report immediately verbally and confirm in writing any disturbance or incidence affecting or likely to affect the day to day scheduling of works.

Disruption of works by others
Other contractors: Make arrangements to work around the disturbance.

2.2 PLANTING WORKS

Planting
Planting: Ensure the general appearance and presentation of the landscape and the quality of plant material at date of practical completion is maintained for the full planting establishment period.

Existing plant material: Maintain existing planting and grass within the landscape contract area as specified for the corresponding classifications of new grassland or planting.

Replacements: Replace failed, dead and/or damaged plants at maximum 3 week intervals as necessary throughout the full plant establishment period.

Pruning
General: Prune to AS 4373.

Fertilising
Soil tests: Take samples from both planting beds and lawn areas and conduct tests.

Fertilising: Base the fertilisation program on the soil testing results. Fertilise trees once every two years. Generally apply an all purpose fertiliser of N:P:K (nitrogen:phosphorus:potassium) 10:4:6 at recommended rates. Alternatively apply 12 month slow release fertiliser (such as Nutricote) at the manufacturer's recommended rate. Apply all purpose fertiliser to shrubs annually in two bands and cultivated into the soil 100 mm deep.

Season: Fertilise shrubs and trees in September and March according to their seasonal growth requirement.

Insect and disease control
Period for treatment: Until the problem has been eliminated.

Chemical spray: Apply outside of normal working hours.

Stakes and ties
Generally: If plants are unable to be self supported or if stakes are damaged, stake or restake the plants as follows:
- Drive three hardwood stakes placed obliquely with the first stake on the opposite side to the prevailing winds.
- Do not single stake large plants.

Removal: If plants are robust with well developed systems and are strong enough to no longer require support, remove stakes and ties.

2.3 GRASS

Mowing and trimming

Litter: Remove litter and fallen branches before mowing.

Height: Consistent with the growth habit of the grass variety and maintained at 25 mm to 40 mm throughout the year.

Program: Weekly during the mowing season, November to March, and at bi-weekly intervals during April to October. Do not mow under wet conditions.

Raking: Once every month before mowing, during the mowing season, with a flexible rake. On alternate mowings, adopt a north-south and east-west pattern.

Edges: At the same time as mowing, trim lawn edges to plant beds, pathways, base of trees and other obstacles. Ensure trees and shrubs are not damaged.

Clippings distribution: Off-site.

Topdressing

Topdressing material for established lawns: Weed free imported sandy topsoil to a depth of 5 mm.

Program: The spring following establishment.

Topdressing material for remediation of depressions or irregularities: Apply coarse or medium soil to AS 4419 suitable for application to turf or grass seeded areas.

Fertilising

Fertilising: Apply lawn fertiliser at the completion of the first and last mowings of the plant establishment period, and at other times as required to maintain healthy grass cover.

2.4 GARDEN BEDS

Weeding

Weeds: Unwanted plants and grasses considered invasive to the locality.

Program:

- Lawns: Quarterly, and as determined by the relationship of the general lawn condition and weed growth.
- Trees and shrubs: As required for planted, paved and mulched areas to be weed free when observed at bi-weekly intervals.

Method: Clear and keep clear vigorous ground covers 200 mm from the base of any shrub or tree:

- Small areas: By hand.
- Large areas: Proprietary herbicides.

Herbicide application: Avoid windy days or if rain is likely to follow within 12 hours. Apply:

- To the manufacturer’s instructions and material data and safety sheets.
- When the weather is humid with moderate temperatures and maximum sunlight.
- When the ground has recommended soil moisture.

Rubbish removal

Rubbish: Remove loose rubbish such as bottles, papers, and cigarette butts from the site. Execute this work regularly so that all areas are free from rubbish when observed at bi-weekly intervals.

Leaf litter: Remove from all path and lawn areas.

Leaf litter distribution: Off-site.

Mulched surfaces

Inspection: Bi-weekly to determine mulch requirements.

Depth: Maintain a minimum depth of:

- 75 mm for organic mulch.
- 50 mm for gravel mulch.

Remulching: Maintain the original ground levels around the base of plants.

2.5 WATERING

Establishment

Extent: To all planting and turf areas.

Water quality:

- pH between 5.5 and 7.5.
- Total soluble salts less than 1000 mg/litre.
- No substances that would be toxic to plant growth.

Watering program: Minimum three complete waterings, soaking to a depth of 150 mm at fortnightly intervals for the first 6 weeks of plant establishment irrespective of natural rainfall. Confirm soaked depth and record in the log book.

Water restrictions: Coordinate the water supply and confirm the watering regime against state and territory government legislation and restrictions at the time.

Irrigation

Hand watering: Manually water all lawn and planting areas until the proposed irrigation system is fully operational, soaking to a depth of 150 mm for lawn and 300 mm for planting. Avoid frequent dampening of the surface. Allow the surface of the soil to partially dry out between waterings.

Irrigation system program: To suit the following:

- The precipitation requirements of the individual zones/stations with regard to types of plants.
- The infiltration rate of the soil/medium and associated physical factors seasons, evaporation, exposure, topography, local authority restrictions.
- An allowance for adjustment or shut down during and after periods prolonged heavy rains.

Equipment maintenance:

- Check all components for proper operation.
- Repair or replace damaged components with equivalent parts.
- Flush any dirt or foreign matter from the system and clear all blockages.

Operation: Ensure by adjustment or replacement of components, that the overall operation of the system is efficient and operational for the entire planting establishment period.

Hand watering

General: Manually water all lawn and planting areas, soaking to a depth of 150 mm for lawn and 300 mm for planting. Avoid frequent dampening of the surface. Allow the surface of the soil to partially dry out between waterings.

2.6 COMPLIANCE

Criteria

Generally: Plant establishment shall be deemed complete, subject to the following:

- Repairs to planting media completed.
- Ground surfaces are covered with the specified treatment to the specified depths.
- Pests, disease, or nutrient deficiencies or toxicities are not evident.
- Organic and rock mulched surfaces have been maintained in a weed free and tidy condition and to the specified depth.
- Vegetation is established and well formed.
- Vegetation cover to the **Plant establishment compliance schedule**.
- Plants have healthy root systems that have penetrated into the surrounding, undisturbed ground and not able to be lifted out of its planting hole.
- Vegetation is not restricting essential sight lines and signage.
- Only frangible species are growing within road side clear zones.
- Specified vegetation setbacks from services and road furniture are evident.
- All hard landscape works have been installed and are operating as specified.
- Collection and removal of litter.
- Removal of mulch from drainage and access areas.
- All non-conformance reports and defects notifications have been closed out.

Plant establishment compliance table

Plant material	**Acceptable failure per area**	**Acceptable concentration of failure**
Tube stock	< 10%	< 15% in any given location
140 mm	< 5%	< 15% in any given location
300 mm or larger	< Nil%	Nil %
Turf	< 5%	Nil %
Cells	< 5%	< 15% in any given location

0261 LANDSCAPE – FURNITURE AND FIXTURES

1 GENERAL

1.1 RESPONSIBILITIES

General
General: Provide landscape furniture and fixtures as documented.

1.2 CROSS REFERENCES

General
Requirement: Conform to the following:
- *General requirements*.
- Materials and finishes schedule.
- *Landscape – maintenance.*

1.3 INSPECTION

Notice
Inspection: Give notice so that inspection may be made of the following:
- Custom-built fixtures fabricated and ready to be delivered to the site.
- Furniture items delivered to site before installation.
- Site locations or substrates prepared to receive furniture or fixtures before installation.

1.4 SUBMISSIONS

Subcontractors
General: Submit names and contact details of proposed suppliers and installers.

Installation
General: Submit the manufacturer's standard drawings and details showing methods of construction, assembly and installation; with dimensions and tolerances.

Preservative treatment
CCA treated timber: If proposed to be used, submit details.

Samples
Submit samples as follows:
- Single seat – FN 01.
- Bench with backrest – FN 02.
- Table – FN 03.
- Tree surrounds – FI 01.
- General waste bin – FI 02A.
- Recycling bin – FI 02B.

2 EXECUTION

2.1 FIXING

Erection
Line and level: Erect posts or poles vertically. Erect furniture items level. Provide a level area around benches and seats where installed on slopes.

2.2 COMPLETION

Maintenance manual
General: Submit the manufacturers' data as follows:
- Recommendations for service use, care and maintenance.
- List of manufacturers and suppliers of replacement parts.

0274 CONCRETE PAVEMENT

1 GENERAL

1.1 RESPONSIBILITIES

General

General: Provide finished surfaces that are:

- Free draining and evenly graded between level points.
- Even and smooth riding.

Performance

Conformance: Comply with the engineering documentation in respect of the subgrades, bases, levels, grades and the minimum details of thickness, reinforcement and concrete strength for pavements.

1.2 CROSS REFERENCES

General

Requirement: Conform to the following:

- *General requirements*.
- Materials and finishes schedule.
- *Pavement ancillaries*.
- *Concrete finishes*.
- *Precast concrete*.

1.3 STANDARDS

Concrete

Specification and supply: To AS 1379.

Materials and construction: To AS 3600.

Slip resistance

Classification: To AS/NZS 4586 for new pedestrian surface materials, as tested by wet pendulum, shall be to V.R11.

Slip resistance measurement of existing installations: To AS/NZS 4663.

Testing authority

General: Independent third party Registered testing authority.

1.4 INTERPRETATION

Definitions

General: For the purposes of this worksection the definitions given in AS 1348 and the following apply.

- Levelness: Absolute level tolerance - maximum deviation from design levels.
- Ambient temperature: The air temperature at the time of mixing and placing of concrete.
- Average ambient temperature: Average value of the maximum and minimum ambient temperatures over the relevant period at a site.
- Concrete class:
  - Normal: Concrete which is specified primarily by a standard compressive strength grade and otherwise in conformance with AS 1379 clause 1.5.3.
  - Special: Concrete which is specified to have certain properties or characteristics different from, or additional to, those of normal-class concrete and otherwise in conformance with AS 1379 clause 1.5.4.
- Early age: A mean compressive strength at 7 days exceeding the values shown in AS 1379 Table 1.2.
- Green concrete: Concrete which has set but not appreciably hardened.
- Flatness: Relative level tolerance - maximum deviation from a 3 m straightedge laid on the surface.
- Weather:

- Cold: Ambient shade temperature < 10°C.
- Hot: Ambient shade temperature > 32°C.

1.5 INSPECTION

Notice

Inspection: Give notice so that inspection may be made of the following:

- Concrete formwork in position.
- Commencement of concrete placing.
- Completion of concrete placing.
- Evaluation of surface finish.

1.6 TOLERANCES

General

Edges abutting gutters: Within ± 5 mm of the level of the actual gutter edge.

Rigid pavement surface:

- Absolute tolerance: + 10 mm, - 0 mm.
- Relative tolerance: ± 5 mm.

Joint locations in plan (rigid pavement): ± 15 mm.

1.7 SUBMISSIONS

Samples

Aggregates: Nominate the source for all aggregates proposed.

Subcontractors: Submit names and contact details of proposed pre-mixed concrete suppliers, and alternative source of supply in the event of breakdown of pre-mixed or site mixed supply.

Submit samples as follows:

- In situ concrete footpath – PV 07.

Sample panels

General: Prepare a sample panel of each type of finish as flows:

- Size: ≥ 2 m^2.
- Include samples of junction details and trim.
- Preserve each panel until related work is complete.

The sample panel shall be the benchmark of quality of execution for the project.

1.8 PRODUCTS

General

Requirement: Conform to engineering documentation, the materials and finishes schedule, and the design drawings.

Execution

Work method statements: Submit proposals for the methods and equipment to be used for the pavement works, including the following:

- Staging of the work, access and traffic control methods.
- Disposal of surface water, control of erosion, contamination and sedimentation of the site, surrounding areas and drainage systems.
- Methods and equipment for each operation.
- Sources of materials.
- Material stockpiles.
- Methods of concrete manufacture.
- Temperature control, curing and protection methods for concrete.

Mix design variation: If a variation is proposed, submit a further mix design report.

Concrete: Submit proposals for mixing, placing, finishing and curing concrete including the following:

- Addition of water at the site.
- Changes to the plastic concrete mix.

- Curing and protection methods.
- Cutting or displacing reinforcement, or cutting hardened concrete.
- Handling, placing, compaction and finishing methods and equipment, including pumping.
- Sequence and times for concrete pours, and construction joint locations and relocations.

Cores, fixings and embedded items: If required, submit shop drawings showing the proposed locations, clearances and cover, and indicate any proposed repositioning of reinforcement.

Cutting or coring: If cutting or coring of hardened concrete is proposed, provide details.

Sawn joints: Submit proposed methods, timing and sequence of sawing joints.

Damaged galvanizing: If repair is required, submit proposals to AS/NZS 4680 Section 8.

Splicing: If splicing not documented is proposed, submit details.

Welding: If welding of reinforcement is proposed, provide details and give notice before welding reinforcement.

Joint sealants: Submit proposals for installation methods and sealant performance.

Concrete placing: Submit proposals for size of the area to be placed and the spacing of planned construction joints before placement commences.

Crack assessment: If unplanned cracks occur in the finished pavement, submit proposals for investigation.

Surface repair method: If required, submit details of the proposed method before commencing repairs.
Trial section: Submit trial pavement.

Testing
Test certificates and records: Submit test certificates, and also retain results on site.

2 PRODUCTS

2.1 REINFORCEMENT

General
Requirement: Conform to engineering documentation.

2.2 AGGREGATE

General
Requirement: Conform to engineering documentation, the materials and finishes schedule, and the design drawings.

2.3 CEMENT

General
Requirement: Conform to engineering documentation.

2.4 WATER

General
Requirement: Conform to engineering documentation.

2.5 ADMIXTURES

General
Requirement: Conform to engineering documentation.

2.6 CURING COMPOUNDS

General
Requirement: Conform to engineering documentation.

2.7 OTHER MATERIALS

Tactile ground surface indicators
Standard: To AS/NZS 1428.4.1.

3 EXECUTION

3.1 SUBGRADE

Preparation
Conformance: Prepare in conformance with the engineering documentation.

3.2 SUBBASE

Preparation
Conformance: Prepare in conformance with the engineering documentation.

3.3 TRIAL PAVEMENT

Trial pavement: Demonstrate by placing a test section that the proposed method of placement will produce a conforming pavement. Remove test sections which do not comply with requirements and dispose of as directed.

3.4 CONCRETE MIX

General
Requirement: Conform to engineering documentation, the materials and finishes schedule, and the design drawings.

Standard
Concrete mix and supply: To AS 3600 Section 17 and AS 1379.

3.5 TESTING

General
Requirement: Conform to engineering documentation.

Standards
Sampling, identification, testing and recording: To AS 1012.

3.6 INSTALLATION

General
Requirement: Conform to engineering documentation, the materials and finishes schedule, and the design drawings.

Junctions with existing pavements
Trimming: Where the pavement is to be joined to an existing pavement remove a strip of the existing pavement at least 300 mm wide for its full depth and trim the edge vertically before placing new pavement material.

Existing sealed pavement: Trim the seal to a neat edge.

Fixed formwork
Requirement: Conform to engineering documentation.

Reinforcement
Requirement: Conform to engineering documentation.

3.7 CONCRETE PLACING AND COMPACTION

General
Requirement: Conform to engineering documentation.

Concrete placing
General: Place concrete uniformly over the width of the slab or lane and so that the face is generally vertical and normal to the direction of placing. Hand spread concrete using shovels, not rakes.

Remove: Any water ponding on the ground.

Placing sequence: Commence from one corner (usually the lowest point) and proceed continuously out from that point.

Weather: Do not place concrete in temperatures above 30°C or below 10°C without adequate precautions.

Compaction
Thickness 100 mm or less: Compaction through placing screeding and finishing processes. If required use a hand-held vibrating screed at the surface. Do not use immersion vibrators.

Thickness > 100 mm and downturns: Use an immersion vibrator.

Placing records

General: Keep on site and make available for inspection a log book recording each placement of concrete, including the following:

- Date of concrete placement.
- Delivery dockets noting the specified grade and source of concrete.
- Slump measurements to AS 1012.3.1.
- The portion of work.
- Volume placed.

Rain

General: During placement and before setting, do not expose concrete to rain.

Protection: Protect surface from damage by covering until hardened.

Concrete placing in cold weather

Cement: Do not use high alumina cement.

Placing concrete: Maintain the temperature of the freshly mixed concrete at 5°C.

Formwork and reinforcement: Before and during placing maintain temperature at 5°C.

Severe weather: If severe weather conditions are predicted, use high early strength cement.

Temperature control: Heat the concrete materials, other than cement, to the minimum temperature necessary to ensure that the temperature of the placed concrete is within the limits specified.

Admixtures: Do not use calcium chloride, salts, chemicals or other material in the mix to lower the freezing point of the concrete.

Frozen materials: Do not allow frozen materials or materials containing ice to enter the mixer, and keep free of frost and ice any forms, materials, and equipment coming in contact with the concrete.

Maximum temperature of water: 60°C when it is placed in the mixer.

Plastic concrete: Prevent plastic concrete from freezing, without using salts or chemicals.

Concrete placing in hot weather

Handling: Prevent premature stiffening of the fresh mix and reduce water absorption and evaporation losses. Mix, transport, place and compact the concrete in conformance with the **Elapsed delivery time table**.

Placing concrete: Maintain the temperature of the freshly mixed concrete in conformance with the **Hot weather placing table**.

Formwork and reinforcement: Before and during placing maintain temperature at 35°C.

Severe weather: If ambient shade temperature > 38°C, do not mix concrete.

Temperature control: Select one or more of the following methods of maintaining the specified temperature of the placed concrete:

- Cool the concrete using liquid nitrogen injection before placing.
- Cover the container in which the concrete is transported to the forms.
- Spray the coarse aggregate using cold water before mixing.
- Use chilled mixing water.

Hot weather placing table

Concrete element	Temperature limit
Normal concrete in footings, beams, columns, walls and slabs	35°C
Concrete in sections ≥ 1 m in all dimensions except for concrete of strength 40 MPa or greater, in sections exceeding 600 mm in thickness	27°C

Evaporation control barriers: Erect barriers to protect freshly placed concrete from drying winds.

3.8 CONCRETE PRIMARY FINISH

General

Requirement: Conform to engineering documentation.

Finishing: Do not commence finishing until all bleed water has evaporated from the surface.

Commence: Immediately after placement and spreading and compaction of the plastic concrete, start finishing operations to achieve the documented finish.

Finish: Refer to materials and finishes schedule and the design drawings.

Unformed surfaces

General: Strike off, screed and level slab surfaces to finished levels, to the tolerance class and finish noted in the Unformed surface finishes schedule.

Formed surfaces

Damage: Do not damage concrete works through premature removal of formwork.

Curing: If forms are stripped when concrete is at an age less than the minimum curing period, commence curing exposed faces as soon as the stripping is completed.

3.9 CONCRETE CURING

General

Requirement: Conform to engineering documentation.

Curing: Commence curing as soon as possible after finishing and extend for a minimum period of 3 days.

End of curing period: Prevent rapid drying out at the end of the curing period.

Protection: Maintain at a reasonably constant temperature with minimum moisture loss, during the curing period.

Cold weather curing

General: Maintain concrete temperature between 10 – 20°C for curing period.

Hot weather curing

Curing compounds: If it is proposed to use curing compounds, provide details.

Protection: Select a protection method as applicable.

- If the concrete temperature exceeds 25°C or if not protected against drying winds, protect the concrete using a fog spray application of aliphatic alcohol evaporation retardant.
- If ambient shade temperature is > 35°C, protect from wind and sun using an evaporative retarder until curing is commenced.
- Immediately after finishing, either cover exposed surfaces using an impervious membrane or hessian kept wet until curing begins, or apply a curing compound.

Curing methods

Covering sheet method: Immediately after finishing operations cover concrete using damp hessian or cotton mats overlapped at least 150 mm and anchored against displacement by wind or other interference. Keep the mats continuously damp until covered by the covering sheet material. Repair tears immediately.

Moist curing method: Immediately after finishing operations and once concrete has set sufficiently to be not damaged by the curing process keep the concrete surface continuously damp by ponding or spraying constantly with water, fog, or mist, using suitable spraying equipment. Continue wetting for the curing period.

Self levelling toppings: To AS 3799, if also used for curing.

Coloured concrete: Do not cure with plastic sheeting, damp sand or wet hessian. Use only chemical curing compounds compatible with the sealer or simply use a sealer (It must then comply with the requirements of a chemical compound sealer).

Curing compound

Application: Provide a uniform continuous flexible coating to AS 3799 without visible breaks or pinholes. Ensure coating remains unbroken at least for the required curing period after application. Respray defective areas within 30 minutes. Respray within 3 hours after heavy rain.

3.10 JOINTS

General

Requirement: Conform to engineering documentation.

General: Construct expansion, contraction and construction joints straight and plumb. Make transverse joints normal to longitudinal joints. Extend transverse expansion and contraction joints continuously from edge to edge of the pavement through interconnected slabs.

Joint layout: Install joints as documented.

Joint spacings: Refer to the engineering documentation.

Joint widths: refer to the engineering documentation and the design drawings.

Contraction joints

Installation: Construct transverse and longitudinal contraction joints by early age power sawing or by placing an insert in the fresh concrete.

Dowelled joints

Dowelled contraction joint: Place dowels at 300 mm centres orthogonal to the joint direction and parallel to the pavement surface, accurate alignment is critical, ensure proper field supervision.

Dowel assembly: Use a dowel-assembly support frame firmly secured to the subbase during concrete placement. Prevent the dowel assembly support frame from passing through the joint. Do not insert dowels during the placement of concrete.

Debond dowel: Coat with a debonding coating to 0.5 length + 25 mm. Embed the unpainted half of the dowels in the slab placed first.

Movement: Do not distort or displace beyond the alignment tolerances under testing or during construction. Do not remove and replace dowels in pre-formed holes.

Tie bar joints

Longitudinal contraction joints: Place tie bars at 800 mm centres. Alignment accuracy of tie bars is not critical.

Construction joints

Installation: Place header board on the subbase or subgrade at right angles to the pavement centre line.

- Planned location: Terminate each day's placing operation at a transverse construction joint located to coincide with a planned contraction or expansion joint.
- Unplanned joints: If placement is interrupted for 30 minutes or longer, form a tied transverse construction joint within the middle third of the distance between planned joints but no closer than 1.5 m to the nearest planned joint. If necessary remove placed concrete back to the required location.

Expansion joints

Expansion joints: Provide formed full depth joints around structures and features which project through, into or against the pavement, and elsewhere as required.

Doweled expansion joints: Cap dowels at one end with a compressible material.

Formed joints

Full depth joints: Form the edge of the concrete placed first to provide a smooth, vertical face. After stripping and cleaning fix the joint filler with a suitable waterproof adhesive to the face of the slab, and place the adjoining concrete after the adhesive has set.

Weakened plane joint: Cut a crack-inducing groove by using a suitable tool into the plastic concrete during finishing of the concrete surface. Compact and refinish the plastic concrete around the groove after forming the joint.

Rebated groove joints: Form the rebate by securely fixing removable steel or timber form strips to the form or forms on the slab which is placed first, so that the top of the steel strip is flush with the top of the form. After stripping and cleaning, fix the joint filler in the rebate after placing the adjoining concrete.

Sawn joints

Weakened plane joint: Saw the hardened concrete to depth at least ¼ to ⅓ of the pavement thickness and to a uniform width in the range of 3 – 5 mm as follows:

- Timing: Commence sawing, regardless of time or weather conditions, as soon as the concrete has hardened sufficiently to permit cutting with only minor ravelling of the edges of the saw cut. Complete sawing no later than 24 hours after concrete placement.
- Sequence: If possible, saw every third transverse joint initially, then saw the intermediate joints. Start where concrete placement has commenced.
- Cracking: If the concrete has already cracked near the location chosen for a joint, do not saw a joint in that location. If a crack develops ahead of the saw cut, discontinue sawing and submit proposals for extra sawn joints. If uncontrolled cracking occurs, suspend concrete placing.
- Stand-by machines: Provide one stand-by sawing machine for each machine planned to be used.

- Cleaning and protection: Immediately after each joint is sawn, flush the saw cut and adjacent concrete surface using water, until the waste from sawing is removed from the joint. Temporarily caulk the joint using plastic or rubber tubing, or a suitable Tee shaped extrusion. Leave the caulking in place until grooving and sealing.

Rebated groove joints: Saw straight, parallel sided grooves for joint seals on top of and centred on the sawn weakened plane joints.

- Timing: Commence sawing after the curing period has ended, immediately before joint sealing. Saw during daylight hours.

Protection: Where there is a time elapse after sawing and before joint sealing, install a thin-splined rubber strip with a free width slightly larger than the saw cut at the bottom of the saw cut after washing slurry from sawn groove to temporarily prevent ingress of solid material.

Preparing joints

Stripping time: At least 12 hours.

Clean: Immediately before installation of the sealer ensure that the joint space is dry, clean and free from loose material. Remove laitance, curing compound and protrusions of hardened concrete from the sides and upper edges of the joint.

Joint sealing

Install backer rod: Install backer rod of closed cell polyethylene strip to the bottom of the sealant groove.

Sealant installation: Use a field moulded sealant gunned into the joint above the backing rod in a semi-liquid form.

Sealant type: Provide silicone sealant in conformance with manufacturer's recommendations.

3.11 SURFACE SEALERS

Slip resistance

Sealer: Apply surface sealer after the curing period and when concrete has dried to allow the sealer to penetrate into the concrete surface.

Curing sealer compound: If using the sealer as a curing compound, apply directly after finishing.

Concrete finishes

Conform to: Materials and finishes schedule.

Surface repairs

Surface repair method: If surface repairs are required, submit proposals.

3.12 COMPLETION

Protection

General: Keep traffic, including construction plant, off the pavement entirely during curing, and thereafter permit access only to necessary construction plant vehicles that conform to the predetermined load limits appropriate to the use of the concrete.

Reinstating adjacent surfaces

General: Reinstate surfaces next to new pavements and associated elements. Where an existing flexible road pavement has been disturbed, trim it back to a straight and undisturbed edge 250 – 300 mm from and parallel to the new concrete for the full depth of the slab. Backfill with asphalt rammed solid, using suitable rammers.

Traffic on pavement

General: Give notice before opening the pavement to traffic before the work is completed. Provide protection.

Testing

Concrete pavement: Check tolerance criteria for flatness and levelness. Where pavement does not conform submit rectification proposal.

Unplanned cracking:

- 0.3 mm wide crack is acceptable.
- > 1 mm must be assessed, submit a proposal for possible cause and rectification processes.

0275 SEGMENTAL PAVERS – MORTAR BED

1 GENERAL

1.1 RESPONSIBILITIES

General

General: Provide external paving:

- Consistent in colour and finish.
- Firmly bonded to substrates for the expected life of the installation.
- Resistant to expected impacts in use.
- Set out with joints accurately aligned in both directions.
- To direct all water flowing from supply points to drainage outlets without leakage to the substrate or adjacent areas.

Performance

Conformance: Comply with the engineering documentation in respect of the subgrades, bases, levels, grades and the minimum details of thickness, reinforcement and concrete strength.

1.2 CROSS REFERENCES

General

Requirement: Conform to the following:

- *General requirements*.
- Materials and finishes schedule.
- *Pavement ancillaries*.
- *Stone masonry*.

1.3 STANDARDS

Slip resistance

Classification: To AS/NZS 4586 for new pedestrian surface materials, as tested by wet pendulum, shall be to V.R11.

Slip resistance measurement of existing installations: To AS/NZS 4663.

Luminance

Classification: To AS/NZS 1428.4.

Testing authority

General: Independent third party Registered testing authority.

1.4 INTERPRETATION

Definitions

General: For the purposes of this worksection the definitions given below apply.

- Adhesives:
  - Cementitious (C): Adhesives in which the binders are hydraulic, e.g. Portland cement, with aggregates and organic additives.
  - Dispersion (D): Adhesives in which the binders are in the form of aqueous polymer dispersion with mineral fillers and organic additives.
  - Reaction resin (R): Adhesives in which in the binders are synthetic resins with mineral fillers and organic additives. The curing occurs by chemical reaction.
- Substrates: The surface to which a material or product is applied.
- Bedding: Mixtures of materials which are applied to substrates in a plastic state and dry and cure to adhere tiles to substrates.
  - Adhesive bedding: Tiling adhered by adhesives.
  - Mortar bedding: Tiling adhered in a cementitious mortar bed.

- Pavers: Slabs made from clays, stone, precast concrete and/or other inorganic raw materials generally over 20 mm thick used as coverings for floors and supported over continuous substrates.
- Terrazzo tiles – cementitious: Manufactured cementitious terrazzo tiles formed in a suitable machine to give sufficient compaction and density to the finished surface, and moisture cured before grinding and honed at the place of manufacture. Thickness usually 35 mm.
- Lippage: Height deviation between adjacent pavers.

1.5 INSPECTION

Notice

Inspection: Give notice so that inspection may be made of the following:

- Substrate immediately before paving.
- Trial set-outs before execution.
- Control joints before sealing and grouting.

1.6 SUBMISSIONS

Samples

General: Submit labelled samples of pavers, grout and sealants, illustrating the range of variation in colour and finish.

Submit samples as follows:

- Granite paving – main 1 – PV 01A.
- Granite paving – main 2 – PV 01B.
- Granite paving – footpath – PV 02.
- Granite paving – header – PV 03.
- Granite paving – square – PV 04A.
- Granite paving – square (trafficable) – PV 04B.
- Granite paving – parking 1 – PV 05A.
- Granite paving – parking divider – PV 05B.
- Granite paving – entry – PV 06.
- Porphyry cobblestone – PV 51.
- Tactile indicator – TGSI 01.

Sample panels

General: Prepare a sample panel of each type of finish as follows:

- Size: ≥ 2 m^2.
- Include samples of junction details and trim.
- Preserve each panel until related work is complete.

The sample panel shall be the benchmark of quality of execution for the project.

Execution

Grouting: Submit proposals for grouting methods and materials.

Margins: If it appears that minor variations in joint widths or overall dimensions will avoid cut pavers, submit a proposal.

1.7 TESTS

Slip resistance

Type tests: Submit as follows:

- Slip resistance to AS/NZS 4586: Individual paver types and installed paving.
- Field tests of completed pavement: Slip resistance to AS/NZS 4663.
- Program: Conduct field tests immediately before the date of practical completion.

Testing of pavers

General: In accordance with CSIRO BEST (Built Environment Stone Tile) test methods.

Type: Submit results of tests carried out by the manufacturer, confirming that the supplied paver achieve or better, as follows:

- Compressive strength (wet/dry): minimum 193MPa/217MPa.

- Flexual strength (wet/dry): minimum 9.5MPa/11.1MPa.
- Breaking load: minimum 5kN.
- Moisture content and water absorption (by weight): maximum 0.14%.
- Bulk specific gravity: minimum 2.09 tonnes/m^3.

Luminance

Type test: Submit as follows:

- Luminance contrast to AS/NZS 1428.4.1: Tactile paver types to background surface, in both wet and dry conditions.

Salt efflorescence

General: Provide prototype testing of cementitious tiles for salt efflorescence as follows:

Provide a 20 sq. m. area of external paving at an exposed location on a concrete slab as directed on site as early in the construction programme as possible, at least 9 months before final paving.

The prototype shall demonstrate the following means proposed to avoid salt efflorescence:

- The selection of a product of materials known to be salt-free.
- All cement pavers delivered to the site to be fully cured by a curing process that has been slowed as much as possible to minimise efflorescence.
- The pavers are dimensionally stable.
- The paving work carried out on substrate of the correct moisture content.
- Apply sealant to the prototype in three separate areas with generically different sealants applied as recommended by the tile manufacturer.

If efflorescence appears before final paving review the above conditions. Note some manufacturers of cement-rich products claim efflorescence can be minimised but not eliminated and over a long period the situation is self-correcting by further chemical change.

1.8 PRODUCT CONFORMITY

General

General: Submit current assessments of conformity as follows:

- Declaration of conformity by an ISO 9001 quality management system certified supplier:
  - Slip resistance of tiles to AS/NZS 4586.
  - Marking and Classification of tile adhesive to AS 4992.1.

1.9 TOLERANCES

Completed paving

General: Conform to the **Surface level tolerances table:**

Surface level tolerances table

Item	**Level tolerance**	
	Absolute	**Relative**
Vehicular pavements	± 5 mm	5 mm
Pedestrian pavements	± 10 mm	< 10 mm

Level discontinuity: Between adjacent pavers and other surface features for footpath areas 1.5 mm and roadway areas 2.0 mm.

Lippage:

- Unpolished pavers: < 2 mm.
- Polished pavers 300 x 300 mm or less: < 1 mm, with 5% not exceeding 1.5%.
- Polished pavers over 300 x 300 mm: < 1.5 mm, with 5% not exceeding 2%.

2 PRODUCTS

2.1 ADHESIVES

General

Standard: To AS 2358 or AS 4992.1.

Type
General: Provide adhesives compatible with the materials and surfaces to be adhered.

Prohibited uses: Do not provide the following combinations:

- Organic PVC-based adhesives and organic natural rubber latex adhesives in damp or wet conditions.
- PVA (polyvinyl acetate) based adhesives in wet areas or externally.

2.2 MORTAR

Materials
Cement: To AS 3972.

- Type: GP, GL or GB.
- White cement: Iron salts content ≤ 1%.
- Off-white cement: Iron salts content ≤ 2.5%.

Lime: To AS 1672.1.

Sand: Fine aggregate with a low clay content selected for grading, sharp and free from efflorescing salts.

Water: To the recommendations of AS 3958.1.

Measurement of volume: Measure binders and sand by volume using buckets or boxes. Do not allow sand to bulk by absorption of water.

Bedding mortar
Proportioning: Select proportions from the range 1 cement:3 sand – 1 cement:4 sand to obtain satisfactory adhesion. Provide minimum water.

Mixing: To AS 3958.1.

Gauging: Site gauged by volume.

2.3 GROUT

Type
Cement based proprietary grout: Mix with water. Fine sand may be added as a filler in wider joints.

Portland cement based grout: Mix with fine sand. Provide minimum water to achieve workability.

- For joints < 3 mm: 1 cement:2 sand.
- For joints ≥ 3 mm: 1 cement:3 sand.

Pigments
Pigments for coloured grout: Provide colourfast pigments compatible with the grout material. For cement-based grouts, provide inorganic mineral pigments or lime-proof synthetic metallic oxides compatible with cement.

Water
General: Clean and free from any deleterious matter.

Grout to resin terrazzo tiles: Resinous material supplied by the tile supplier.

2.4 PAVERS

Standard
Masonry units, pavers and flags: To AS/NZS 4455.2.

Salt attack resistance grade to: AS/NZS 4455.1 Table 2.3: General purpose grade.

Sandstone flagging
Description: Provide sound stone flags of uniform quality. Reject flags with following defects liable to affect strength and durability: vents, cracks, fissures, seams, porous inclusions, foreign material, loose surface material, and discolouration.

Matching: Select for optimum matching of colour and pattern.

Split flagging thickness: Minimum 50 mm, maximum 75 mm.

Face size: Utilise smaller sizes for pathways and larger sizes for open areas and maintain traditional stone flagging appearance.

Stone setts
Description: Igneous stone cubed cobble style setts.

2.5 OTHER MATERIALS

Tactile ground surface indicators
Standard: To AS/NZS 1428.4.1.

3 EXECUTION

3.1 SUBSTRATES

Drying and shrinkage
General: Before paving, allow at least the following times to elapse (for curing and initial shrinkage) for these substrates:

- Concrete slabs: 28 days.
- Toppings on slabs: A further 21 days.

3.2 PREPARATION

Trial set-out
General: Prepare a trial paving set-out to each area as follows to:

- Maximise the size of equal margins of cut pavers.
- Locate control joints.
- Note minor variations in joint widths to eliminate cut tiles at margins.

Ambient temperature
General: It the ambient temperature is < 5 or > 35°C, do not lay pavers.

Substrates
General: Ensure substrates are as follows:

- Clean and free of any deposit or finish which may impair adhesion or location of pavers.
- Excessive projections are hacked off and voids and hollows are filled with a cement:sand mix not stronger than the substrate nor weaker than the bedding.

Absorbent substrates: If suction is excessive, control it by dampening but avoid over-wetting and do not apply mortar bedding to substrates showing surface moisture.

Concrete: If not sufficiently rough to provide a mechanical key, roughen by scabbling or the like to remove 3 mm of the surface and expose the aggregate; then apply a bonding treatment.

Fixtures
General: Before paving ensure that fixtures interrupting the surface are accurately positioned in their designed or optimum locations relative to the paving layout.

3.3 PAVING GENERALLY

Variations
General: If necessary, distribute variations in hue, colour, or pattern uniformly, by mixing pavers or paving batches before laying.

Paving joints
Joint widths: Set out pavers to give uniform joint widths of 6 to 12 mm.

Margins
General: Provide whole or purpose-made pavers at margins where practicable, otherwise set out to give equal margins of cut pavers. If margins less than half paver width are unavoidable, locate the cut pavers where they are least conspicuous.

Protection
Traffic: Keep pedestrian and vehicular traffic off paving until the bedding has set and attained its working strength.

Cleaning: Keep the work clean as it proceeds and protect finished work from damage.

3.4 MORTAR BEDDING

Preparation of pavers
Suction: Soak porous pavers in water for half an hour and then drain until the surface water has disappeared.

Bedding
General: Use bedding methods and materials which are appropriate to the paver, the substrate, the conditions of service, and which leave the paver firmly and solidly bedded in the bedding material and adhered to the substrate. Form falls integral with the substrate.

Mortar beds
Substrate preparation: Either lightly dust the screeded bed surface with dry cement and trowel level until the cement is damp, or spread a thin slurry of neat cement, or cement-based thin bed adhesive, on to the tile back. Do not provide mortar after initial set has occurred.

Nominal thickness: Refer to design drawings.

Stone flagging
Sub grade: Compact to 95% of the maximum dry density when tested to AS 1289.

Mortar bed thickness: Minimum 30 mm to maximum 60 mm.

Laying pattern: Random, with smaller stones filling the gaps to produce roughly uniform joint widths.

Lay flags and fill joints in one operation.

Stone setts dry bed
Description: Lay and tamp setts on to a dry sand and cement mix, compact and moisten as follows:

- Bed: 1 cement to 3 sand, screeded to the level required to allow setts to be firmly tamped.
- Select the top side of the sett for surface uniformity and tap into the mix to the pre compaction position.
- Compact with a hand ram or mechanical compactor.
- Water spray the surface and allow the bedding to harden.
- Grout joints.

3.5 ADHESIVE BEDDING

Preparation of pavers
Adhesive bedding: Fix pavers dry.

Bedding
General: Use bedding methods and materials which are appropriate to the paver, the substrate, the conditions of service, and which leave the paver firmly and solidly bedded in the bedding material and adhered to the substrate. Form falls integral with the substrate.

Thick adhesive beds
General: Provide on substrates with deviations up to 6 mm when tested with a 2 m straight edge, and with tiles having deep keys or frogs.

Nominal thickness: 6 mm.

Adhesive bedding application
General: Apply adhesive by notched trowel to walls and floors and direct to pavers if required, to provide evenly distributed coverage of > 90%.after laying.

Pattern of distribution of adhesive: Conform to AS 3958.1 Verify by examining one paver in ten as work proceeds.

Allow the adhesive to cure for the period nominated by the manufacturer before grouting or allowing traffic.

3.6 MOVEMENT JOINTS

General
General: Provide control joints as follows:

- Location:
  - Over structural control joints.
  - At internal corners.
  - Close to external corners in large paved areas.
  - Around the perimeter at abutments.
  - At junctions between different substrates.
  - To divide large paved areas into bays, maximum 5 m wide, maximum area 16 m^2.

. At abutments with the building structural frame and over supporting walls or beams where flexing of the substrate is anticipated.

- Depth of joint: Right through to the substrate.
- Sealant width: 6 – 25 mm.
- Depth of elastomeric sealant: One half the joint width, or 6 mm, whichever is the greater.

Control joint types

Divider strip: A proprietary expansion joint consisting of a neoprene filler sandwiched between plates with lugs or ribs for mechanical keying. Set flush with the finished surface.

Proprietary slide plate divider strip: An arrangement of interlocking metal plates grouted into pockets formed in the concrete joint edges.

Sealant: Two-pack self-levelling flexible mould resistant, one-part silicone or polyurethane sealant applied over a backing rod. Finish flush with the tile surface.

- Floors: Trafficable, shore hardness > 35.

Backing rod: Compressible closed cell polyethylene foam with a bond-breaking surface.

3.7 GROUTED AND SEALANT JOINTS

Grouted joints

General: Commence grouting as soon as practicable after bedding has set and hardened sufficiently. Clean out joints as necessary before grouting.

Face grouting: Fill the joints solid and tool flush. Clean off surplus grout. Wash down when the grout has set. When grout is dry, polish the surface with a clean cloth.

3.8 COMPLETION

Spare pavers

General: Supply spare matching pavers of each type for future replacement purposes. Store the spare materials on site.

Quantity: At least 1% of the quantity installed.

Cleaning

Completion: Clean progressively and leave pavements clean on completion.

Operation and maintenance manuals

General: Submit a manual describing care and maintenance of the tiling, including procedures for maintaining the slip-resistance grading stating the expected life of the slip-resistance grade.

0277 PAVEMENT ANCILLARIES

1 GENERAL

1.1 RESPONSIBILITIES

General
General: Provide ancillary pavement elements as documented.

1.2 CROSS REFERENCES

General
Requirement: Conform to the following:
- *General requirements*.
- Materials and finishes schedule.
- *Precast concrete*.

1.3 STANDARDS

Slip resistance
Classification: To AS/NZS 4586 for new pedestrian surface materials, as tested by wet pendulum, shall be to V.R11.

Slip resistance measurement of existing installations: To AS/NZS 4663.

Luminance
Classification: To AS/NZS 1428.1.

1.4 INTERPRETATION

Definitions
General: For the purposes of this worksection the definitions of AS 1348 and those given below apply.
- Absolute level tolerance: Maximum deviation from design levels.
- Relative level tolerance: Maximum deviation from a 3 m straightedge laid on the surface

1.5 SUBMISSIONS

Samples
Submit samples as follows:
- Stair tread nosing – TGSI 02.

2 PRODUCTS

2.1 STAIR TREAD NOSING

General
Standards: Layout and location to AS 2890.3.

Product: Refer materials and finishes schedule.

3 EXECUTION

3.1 STAIR TREAD NOSING

Installation
To precast concrete stairs: To manufacturer’s requirements.

0278 GRANULAR SURFACES

1 GENERAL

1.1 RESPONSIBILITIES

General

General: Provide base and granular surfacing that are as follows:

- To the level tolerances.
- To the compaction requirements.

1.2 CROSS REFERENCES

General

Requirement: Conform to the following:

- *General requirements*.
- Materials and finishes schedule.

1.3 SUBMISSIONS

Samples

Submit samples as follows:

- River pebble – PV 52.

2 PRODUCTS

2.1 MATERIALS

Base

Description: Fine crushed rock, free of sand and coatings of clay or organic material, and containing not more than 1% disintegrated, weathered, soft fractured, friable or poorly indurated fragments.

Granular surface material

Gravel: Unscreeded natural stone as follows:

- Stone type and source: Refer materials and finishes schedule.

3 EXECUTION

3.1 SUBGRADE

Preparation

Excavation: Cut and trim the subgrade to enable the finished compacted thickness to finish flush with adjacent surfaces.

3.2 BASE

Gravel surfaces

Method: Mechanically spread material to the loose thickness required to produce the documented finished compacted thickness. Do not transport new material over uncompacted material. If the subgrade is disturbed during placing or becomes mixed with new material, remove all contaminated material and replace, regrade and compact.

Moisture: Bring base material to the optimum moisture content before and during placing. Do not add water during compaction except as required to replace evaporation.

3.3 COMPACTION

Subgrade and base

Hand compaction: Condition the material by moisture adjustment before compaction. Compact to 95% of the maximum dry density.

Sampling: To AS 1289.1.2.1.

Testing: To AS 1289.5.1.1, AS 1289.5.3.1 or AS 1289.5.8.1.

3.4 SURFACING

Levels

Tolerance: Finished surface to ± 10 mm from the documented profile.

Gravel

Thickness: Spread loose material screeded to over the compacted base, as per design drawings.

0315 CONCRETE FINISHES

1 GENERAL

1.1 RESPONSIBILITIES

General

General: Provide finishes to formed and unformed concrete surfaces as follows:

- Appropriate to the importance (visual or physical) of the concrete elements.

1.2 CROSS REFERENCES

General

Requirement: Conform to the following:

- *General requirements*.
- Materials and finishes schedule.
- *Concrete formwork*.
- *Concrete in situ*.

1.3 STANDARDS

General

Formed surfaces: To AS 3610.1.

1.4 INTERPRETATIONS

Definitions

General: For the purposes of this worksection, the following definition applies:

- Green concrete: Concrete which has set but not appreciably hardened.

1.5 INSPECTION

Notice

Inspection: Give notice so that inspection may be made of the following:

- Evaluation of the off-form finishes to formwork.

1.6 SUBMISSIONS

Execution documentation

Shop drawings: Submit formwork shop drawings including details of proposed form linings, form bolt positions, form facings, release agents and, where applicable, reuse of formwork.

1.7 TOLERANCES

Surface quality

Formed surfaces: Confirm conformance with the surface finish requirements of AS 3610.1 for the surface class nominated in the **Formed surface finishes schedule**.

Flatness

Unformed surfaces: Confirm conformance with the **Flatness tolerance classes table** for the class of finish nominated using a straight edge placed anywhere on the surface in any direction.

Flatness tolerance class table

Class	Measurement	Maximum deviation (mm)
A	3 m straight edge	3
B	3 m straight edge	6
C	600 mm straight edge	6

1.8 TEST PANELS

General
Conformance: Supply test panels to AS 3610.1 and in conformance with the **Test panels schedule** for the application specified.

Manufacture
General: Cast the panels using the formwork, concrete, compaction equipment, form release agents, curing and formwork removal methods which are to be used in the final work.

Storage
General: Once accepted, maintain the panels on site undamaged and protected from the weather, as reference prototypes for future evaluation of completed work.

1.9 SURFACE TREATMENT

General
Range: Do not proceed with the related work until the acceptable range of surface treatments has been determined.

2 PRODUCTS

2.1 MATERIALS

Surface hardeners, sealants and protectors
Supply: If required by the project documentation, provide proprietary products in accordance with the manufacturer's recommendations.

3 EXECUTION

3.1 SURFACE MODIFIERS

General
Application: Apply to clean surfaces in conformance with the manufacturer's recommendations.

3.2 FORMED SURFACES

General
General: Provide formed concrete finishes in conformance with the materials and finishes schedule and the design drawings.

Damage: Do not damage concrete works through premature removal of formwork.

Curing
General: If forms are stripped when concrete is at an age less than the minimum curing period, commence curing exposed faces as soon as the stripping is completed.

Evaluation of formed surfaces
General: If evaluation of formed surface tolerance or colour is required, complete the evaluation before surface treatment.

Finishing methods
General: If soffits of concrete elements or faces of concrete columns are to have a finish other than off the form, provide details of proposed procedures.

Blasted finishes:

- Abrasive: Blast the cured surface using hard, sharp graded abrasive particles until the coarse aggregate is in uniform relief.
- Light abrasive: Blast the cured surface using hard, sharp graded abrasive particles to provide a uniform matt finish without exposing the coarse aggregate.

Bush hammered finish: Remove the minimum matrix using bush hammering to expose the coarse aggregate, recessing the matrix no deeper than half the aggregate size, to give a uniform texture.

Exposed aggregate finish: Remove the vertical face forms while the concrete is green. Wet the surface and scrub using stiff fibre or wire brushes, using clean water freely, until the surface film of mortar is mechanically removed, and the aggregate uniformly exposed. Do not use acid etching. Rinse the surface with clean water.

Floated finishes:

- Sand floated finish: Remove the vertical face forms while the concrete is green. Wet the surface and rub using a wood float. Rub fine sand into the surface until a uniform colour and texture are produced.
- Grout floated finish: Remove the forms while the concrete is green. Dampen the surface and spread a slurry, using hessian pads or sponge rubber floats. Remove surplus slurry and work until a uniform colour and texture are produced.

Smooth rubbed finish: Remove the vertical face forms while the concrete is green. Wet the surface and rub using a carborundum or similar abrasive brick until a uniform colour and texture are produced.

Surface repairs

Surface repair method: If surface repairs are required, submit proposals.

3.3 UNFORMED SURFACES

General

General: Strike off, screed and level slab surfaces to finished levels, to the tolerance class noted in the materials and finishes schedule and the design drawings.

Surface finishes

General: Provide surface finishes in conformance with the materials and finishes schedule and the design drawings.

Surface repairs

Surface repair method: If surface repairs are required, submit proposals.

Finishing methods – primary finish

Machine float finish:

- After levelling, consolidate the surface using a machine float.
- Cut and fill and refloat immediately to a uniform, smooth, granular texture.
- Hand float in locations inaccessible to the machine float.

Steel trowel finish: After machine floating finish as follows:

- Use power or handsteel trowels to produce a smooth surface relatively free from defects.
- When the surface has hardened sufficiently, retrowel to produce the final consolidated finish free of trowel marks and uniform in texture and appearance.

Burnished finish: Continue steel trowelling until the concrete surface attains a polished or glossy appearance, uniform in texture, appearance and free of trowel marks and defects.

Wood float finish: After machine floating use wood or plastic hand floats to produce the final consolidated finish free of float marks and uniform in texture and appearance.

Broom finish: After machine floating and steel trowelling draw a broom or hessian belt across the surface to produce a coarse even-textured transverse-scored surface.

Scored or scratch finish: After screeding, give the surface a coarse scored texture using a stiff brush or rake drawn across the surface before final set.

Sponge finish: After machine floating and steel trowelling, produce an even textured sand finish by wiping the surface using a damp sponge.

Finishing methods – supplementary finish

Abrasive blast: After steel trowelling, abrasive blast the cured surface to provide texture or to form patterns without exposing the coarse aggregate using hard, sharp graded abrasive particles.

Coloured applied finish: To a machine float finished surface, apply a proprietary liquid or dry shake material in conformance with the manufacturer’s recommendations and trowel to achieve the required appearance.

Exposed aggregate: After steel trowelling, grind the cured surface of the concrete to expose the coarse aggregate.

0316 PRECAST CONCRETE

1 GENERAL

1.1 RESPONSIBILITIES

General

General: Provide precast concrete elements that are:

- Fabricated in conformance with the shop drawings.
- Designed and certified by a professional engineer.
- Designed for handling, transport and erection by a professional engineer.
- Undamaged by handling and installation.
- Certified by a professional engineer after erection.

1.2 CROSS REFERENCES

General

Requirement: Conform to the following:

- *General requirements*.
- Materials and finishes schedule.
- *Concrete pavement.*
- *Pavement ancillaries.*
- *Concrete finishes.*

1.3 STANDARDS

General

Precast members: Conform to the recommendations of NP:PCH (Precast concrete handbook).

Transport, erection and installation: To AS 3850.

Structural design: To AS 3600 and BCA B1.1.

Precast flooring: To AS 3600 and AS/NZS 1170.

Slip resistance: To AS/NZS 4586.

Slip resistance measurement of existing installations: To AS/NZS 4663.

1.4 INTERPRETATION

Abbreviations

General: For the purposes of this worksection the following abbreviations apply:

WLL: Working Load limit.

Definitions

General: For the purposes of this worksection the definitions given in AS 3850 clause 1.3 and the following apply:

- National code: National code of practice for precast, tilt-up and concrete elements in building construction.
- Precast concrete: Concrete building elements, cast in moulds and cured away from the final structural position, and then transported, lifted and fixed into position.

1.5 INSPECTION

Notice

Inspection: Give notice so that inspection may be made of the following:

- Formwork dimensions and stability.
- Panel edge details and penetrations.
- Connection materials and inserts in place.
- Reinforcement and/or prestressing tendons in place.

- Concreting.
- First precast unit of each type at the earliest possible time before and immediately after stripping.
- Stripping and storage.
- Site erection including fixings, in situ topping.
- Installed temporary bracing.
- Final structure before removal of temporary bracing.

1.6 TOLERANCES

General

Position of reinforcement and tendons: To AS 3600 clause 17.5.3.

Manufacturing tolerance for precast elements: To AS 3610.1 Table 3.3.3. and AS 3850 clause 3.11.

Fixings and embedded items in precast units: To AS 3850 Table 3.11(B) and AS 3610.1 Table 3.3.3.

1.7 SUBMISSIONS

Calculations

Design: Submit structural performance calculations.

Design

Contractor design: Provide independent verification by a professional engineer of conformance of the design to project criteria.

Drawings

Precast concrete drawings: Submit shop drawings of architectural and structural precast concrete showing the proposed details for their design, manufacture, assembly, transport and installation, including the following:

- Project title and manufacturer's name.
- Marking plans and elevations referenced to the building grids and floors to locate each precast unit.
- Shape or profile drawings (submit these before fabrication of moulds and tooling).
- Concrete mix and type of cement if special-class concrete.
- Locations, sizes, details, materials, ductility and stress grades of tendons and reinforcement.
- Locations, sizes, details, materials, corrosion protection and grades of cast-in ferrules, locating plates and angles, cut outs and openings, bolts, anchors and lifting devices.
- Cast-in services.
- Site fitments.
- Details of all joints caulking, baffles and waterproofing.
- Surface finish class and surface treatment, if applicable.
- Curing and protection methods.
- Weights of units.
- Calculated maximum loadings on lifting and bracing inserts and attachments.
- Equipment and methods for handling, transport and installation, including lifting inserts and pick-up points.
- Evidence of load capacity of lifting and bracing inserts and attachments in the form of test reports or calculations.
- Specification of plugs for sealing recesses for cast-in fixings.

Execution details

Panel casting: Submit panel casting checklist.

Manufacturer’s details: Submit name, contact details and credentials of proposed manufacturer of precast concrete units.

Safe work method statement: Prepare a safe work method statement specific to the project for the precast erection and submit on request.

Erection documentation: Submit lifting device locations and specification including marking plans and shop drawings.

Early lifting: If it is proposed to lift the units by their designated lifting points before 28 day strength has been achieved, submit evidence to demonstrate that the unit has adequate strength to carry its own weight without damage or residual cracking or deflection on removal of the lifting device.

Lifting and handling equipment: Submit details of proposed equipment along with qualifications and training of the operating personnel in the form of a qualification register.

Products

Protective coating details: Submit proposals for protective coatings to exposed metallic components to AS/NZS 2312 with regard to site-specific corrosivity zoning.

Colour: Provide details of method of achieving the selected colour including details of the type and colour of the cement, sand and aggregates as well as colouring oxide pigments or stain.

Proprietary documentation: Submit proprietary documentation for any lifting, bracing, fixing inserts. Include make, type and WLL.

Non proprietary inserts: Submit certificate from a professional engineer.

Concrete mix: Submit concrete mix details including the proportions and source of the constituents, admixtures, release agents, curing compounds.

Samples

Submit samples as follows:

- Precast concrete stair – ST 01.

Surface finish: Submit samples for texture and colour.

Sample size: One (1) piece.

Tests

Lifting inserts and attachments for precast units: Submit test results.

Structural performance: Submit test results of prior testing for static load tests.

Static load tests: If structural performance requirements are nominated for the precast unit, perform static load tests on the prototype to AS 3600.

2 PRODUCTS

2.1 CONSTITUENT MATERIALS

General

Stockpile: If precast elements are required to have uniform and consistent colour, stockpile sand, cement and aggregates proposed to be used.

Cement

Standard: To AS 3972.

Type: Do not use high alumina cement.

Aggregates

Standard: To AS 2758.1.

Aggregate properties: Refer to materials and finishes schedule.

Special aggregates: Stockpile special aggregates at the beginning of the project to minimise colour and other variations.

Water

Standard: To AS 1379.

Quality: Use clean water, free from oil, acid, alkali, organic or vegetable matter and with not more than 500mg/l of chloride ions.

Other

Chemical admixtures: To AS 1478.1.

Pigments: Ensure that the pigments are:

- Chemically inert.
- Alkaline resistant.
- Insoluble.
- Light-fast.

Reinforcement
Standard: To AS/NZS 4671.

General: Clean and free from harmful matter e.g. loose mill scale, loose rust, oil, grease and retarders, ensure there is no pitting.

Structural welding: To AS/NZS 1554.3.

Corrosion: Protect from corrosion in conformance with AS 3600 clause 17.2.1.2.

Prestressing tendons
Standard: To AS/NZS 4672.1.

- Type: 7 wire, stress relieved, high tensile steel and strand.

Prestressing hardware (including ducts, anchorages): To AS 3600.

Welding tendons: Do not weld prestressing tendons.

2.2 PRECAST CONCRETE

General
Concrete: To AS 3600 and AS 1379.

Testing: To AS 1012.

Durability
Concrete cover: To AS 3600.

Strength
Minimum compressive strength: To engineer's requirements.

Finishes
General: Refer to materials and finishes schedule.

3 EXECUTION

3.1 PRECAST UNITS

Marking
Plank/panel identification: Include the following:

- Plank thickness (mm).
- Number of strands.
- Strand diameter (mm).
- Concrete cover (mm).
- Remain legible until after the unit has been fixed in place.
- Not visible in the completed structure.
- Show the date of casting.
- Show the correct orientation of the unit.
- On other than units manufactured as a standard product, indicate the locations within the structure in conformance with the marking plan.
- Show the weight of the unit.

Attachments for structural or architectural fixings
Ferrules: Provide ferrules anchored behind the reinforcing as shown on the drawings.

Dowel bars: Provide dowel bars loose, cast in or screwed into a ferrule or coupler and projecting from the precast unit. Alternatively, where dowels are cast into and project from in situ concrete, provide a mating sleeve without tube.

Grout tube: Provide grout tubes as documented, made from thin wall galvanized duct or similar cast into either in situ concrete or the precast unit into which a dowel bar will be grouted.

Cast in plates and bolts: Provide purpose made steel brackets with bars, bolts or studs welded to them.

Support and fixings: Provide supporting brackets (loose or cast-in), ferrules, double inserts, bolts, nuts, packers and washers.

Restraint brackets: Provide all support or restraint brackets for the precast units as documented or as required.

Starter bars: Provide all starter bars as documented.

Welding of connections: To AS/NZS 1554.

Cast in: Cast in all lifting, bracing and fixing inserts.

External walls: Wall panels and connections to BCA C1.11.

Curing

Curing compounds: To AS 3799.

Release agent: Provide a release agent that is compatible with the curing compound.

Rejection

Assessment: Set aside for inspection any unit having damage such as cracking, deformation or spalling, or exhibiting lack of adequate concrete cover. Repair or recast as instructed.

Lifting points

Standard: To AS 3850.

Cast in inserts: Provide hot-dipped galvanizing finish with a minimum coating mass of 600 g/m^2 to all cast-in lifting and bracing devices.

Bracing inserts or strongbacks: Provide bracing inserts or strongbacks designed by a professional engineer.

Proprietary systems: Use in conformance with manufacturer's specifications and recommendations.

Lifting loops: Do not use deformed bars or stressing tendons as lifting loops.

Sealing: Recess lifting attachments such as bracing ferrules, or other types of cast-in fixings, and provides plugs for sealing.

Location: Do not place lifting attachments, holes and other temporary fixings for handling purposes on visible faces of units.

Marking: Clearly mark all lifting points and the positions for temporary bearing for storage and transport.

Welding: Do not site-weld lifting, bracing or fixing inserts.

Lifting or supporting members: Only at specified points.

Lifting devices: Do not use the fixing devices for lifting or hoisting unless they have been designed to do so and confirmed by a professional engineer.

Precautions: Use handling methods which do not overstress, warp or damage the units.

After erection: Remove, seal and make good temporary attachments.

General: Provide proprietary lifting devices with published load data designed specifically for lifting concrete elements. Use face and edge lifters as required.

Storage

Support points: Support elements at designated support points during storage.

Prevent damage: Store units to prevent warping, twisting, crushing, cracking and staining.

Protection: Protect the units against staining, discolouration and other damage until they are installed in their final location.

3.2 INSTALLATION

Lifting and Handling

Lifting and handling: Conform to the National code and AS 3850.

Site conditions: Ensure the wind and temperature conditions allow handling and fixing, and are consistent with the structural capability and geometry of the element.

Site Cranes: To AS 2550.

Temporary bracing and propping: To AS 3850 and AS/NZS 1170.2.

Fixing

Fixing: Fix the units securely and accurately in their final positions.

Ancillaries: Provide components and materials, including fasteners, braces, shims, jointing strips, sealant, flashings, grout and mortar, bearing pads or strips, ties and dowels, clips and fixings necessary for the installation of the units.

Tolerances: To AS 3850 clause 3.11.

Surfaces bonded to in situ concrete

Surfaces bonded to concrete: Fully scabble and roughen all surfaces required to bond with in situ concrete to achieve a shear plane surface coefficient in conformance with Table 8.4.3 of AS 3600.

3.3 TESTING

Compliance

Tolerances: Check element compliance with **Tolerances** in conformance with AS 3610.1 Section 5.

Rejection: Reject any precast panels not conforming to the tolerances.

0331 BRICK AND BLOCK CONSTRUCTION

1 GENERAL

1.1 RESPONSIBILITIES

General
General: Provide brick and block construction as documented.

1.2 CROSS REFERENCES

General
Requirement: Conform to the following:
- *General requirements*.
- Materials and finishes schedule.
- *Landscape – walling and edging.*

1.3 STANDARD

General
Materials and construction: To AS 3700.

1.4 INTERPRETATION

Definitions
General: For the purposes of this worksection the definitions in AS 3700 clause 1.5.2 and those given below apply:
- Brick: A masonry unit that does not exceed 338 mm long x 225 mm wide x 113 mm high, of a size that allows it to be picked up with one hand while the other is used to apply mortar with a trowel.
- Block: A masonry unit exceeding the size of a brick in any dimension, for use in the construction of walls or partitions.
- Brickwork and blockwork types:
  . Common or ordinary: Brickwork and blockwork which is not tested for specified strength values, is not especially treated for texture and colour and can include reject face units.
  . Face units: Bricks or blocks used in facework, including purpose-made units such as squints, sills and thresholds.
- Facework: Brickwork or blockwork in which the form, or form and colour, of the face units and joints is visible in the completed works.

1.5 INSPECTION

Notice
Inspection: Give notice so that inspection may be made of the following:
- Set out.
- Unit type, colour and texture.

1.6 TESTS

Durability
Mortar: Mortar durability tests are required.
Conformance: Test to verify conformance as follows:
- Standard: To AS 3700 Appendix FA.
- Acceptance criteria:
  . Class M2: 0.5 mm.
  . Class M3: 0.3 mm.
  . Class M4: 0.1 mm.

Special masonry
Conformance: Test to verify conformance as follows:

- Compressive strength: To AS 3700 Appendix C.
- Flexural strength: To AS 3700 Appendix D.

1.7 SUBMISSIONS

Brick or block unit samples
Face units: Submit face units of each type illustrating the range of variation available, including colour, texture, surface irregularities, defective arrises, and shape.
- Number of each type: 6.

Facework sample panels
General: Provide, in a suitable position, a sample panel of each type of facework including pigmented face or pointing mortar.
- Minimum size (face of panel): 1200 mm high x 1190 mm or closest unit module long.

1.8 TOLERANCES

Masonry construction
Conformance: Conform to AS 3700 Table 11.1.

2 PRODUCTS

2.1 MATERIALS

Bricks and blocks
Standard: To AS/NZS 4455.1and AS/NZS 4455.3.

Salt attack resistance grade: To AS 3700 Table 5.1.
- Bricks and blocks: Below damp-proof course, and in external leaves in the corrosivity categories D and F, provide Exposure grade to AS/NZS 4455.1 Table 2.3 or AS/NZS 4455.3 Table 2.4, as appropriate.

Minimum age of clay bricks: 7 days.

Mortar materials
Durability classification.
- Above the damp-proof-course: Conform to the **Corrosion resistance and durability table**.
- Below the damp-proof-course: M4 mortar conforming to the **Mortar mix table** .

Admixtures: To AS 3700clause 10.4.2.4.

Lime: To AS 1672.1.

Cement: To AS 3972.
- Type: GP.

Masonry cement: To AS 1316.

Proportions: Conform to the **Mortar mix table**.

Sand: Fine aggregate with a low clay content and free from efflorescing salts, selected for colour and grading.

Water: Clean and free from any deleterious matter.

White cement: With ≤ 1% iron salts content.

Pigment: To BS EN 12878, and as follows:
- Quantity: Less than 10% of the mass of cement in the mix.

For light colours: Use off-white cement in the mix.

Mortar mix table

Mortar class to AS 3700	Cement, lime, sand ratios (by volume)			Water thickener
	Clay	Concrete	Calcium silicate	
Masonry cement				
M3	1:0:4	1:0:4	n/a	No
M4	1:0:3	n/a	n/a	No

Cement (GP/GB)				
M2	1:2:9	n/a	n/a	No
M3	1:1:6	1:1:6	n/a	Optional
1:0:5	1:0:5	1:0:5	Yes	
M4	1:0.5:4.5	1:0.5:4.5	n/a	Optional
1:0:4	1:0:4	1:0:4	Yes	

2.2 COMPONENTS

Wall ties

Standard: To AS/NZS 2699.1.

Type: A.

Durability Classification to AS/NZS 2699.1.

Corrosive protection: To AS/NZS 2699.3.

Strength classification:

- Masonry veneer: to engineer's documentation.

Connectors and accessories

Standard: To AS/NZS 2699.2.

Corrosive resistance and durability: Conform to the **Corrosion resistance and durability table**.

Flexible masonry ties: If accommodation of movement is required at control joints and where masonry abuts structural elements such as column faces and slab soffits, provide details.

Corrosion resistance and durability

Compliance: Conform to the **Corrosion resistance and durability table(s)**, or provide proprietary products with metallic and/or organic coatings of equivalent corrosion resistance and as follows:

- Galvanizing: To AS/NZS 4680 .
- Built-in products below damp proof course: Stainless steel 316 or engineered polymer.

Corrosion resistance and durability table – Atmospheric corrosivity category – A and B to AS/NZS 2312

Situation	Steel lintels (each surface)	Wall ties, connectors and other structural steel accessories above damp proof course (each surface)	Minimum mortar classification above damp proof course
External (including cavity air space)	Galvanize after fabrication 300 g/m^2	- Galvanize after fabrication 300 g/m^2 - Metallic-coated sheet Z600 - Galvanized wire 470 g/m^2	M2

Corrosion resistance and durability table – Atmospheric corrosivity category – C to AS/NZS 2312

Situation	Steel lintels (each surface)	Wall ties, connectors and other structural steel accessories above damp proof course (each surface)	Minimum mortar classification above damp proof course
External (including cavity air space)	Galvanize after fabrication 600 g/m^2	- Galvanize after fabrication 600 g/m^2 - Galvanized wire 470 g/m^2	M3

Corrosion resistance and durability table – Atmospheric corrosivity category – D and F to AS/NZS 2312

Situation	Steel lintels (each surface)	Wall ties, connectors and other structural steel accessories above damp proof course (each surface)	Minimum mortar classification above damp proof course
External (including cavity air space)	- Stainless 316 - Galvanize after fabrication 600 g/m^{2}plus organic coating [1]	- Stainless 316 - Engineered polymer	M4
[1] Avoid organic coating in Category F zones.			

Flashings and damp-proof courses
Standard: To AS/NZS 2904.

3 EXECUTION

3.1 GENERAL

Mortar mixing
General: Measure volumes accurately to achieve the documented proportions. Machine mix for at least six minutes.

Protection from contamination
General: Protect masonry materials and components from ground moisture and contamination.

Bond
Type: Stretcher bond.

Building in
Embedded items: Build in wall ties and accessories as the construction proceeds. If it is not practicable to obtain the required embedment wholly in the mortar joint in hollow unit brickwork or blockwork, fill appropriate cores with grout or mortar.

Steel door frames: Fill the backs of jambs and heads solid with mortar as the work proceeds.

Clearance for timber frame shrinkage
General: In timber frame brick veneer construction, leave clearances between window frames and brick sill and between roof frames and the brick veneer as follows:

- Additional clearance: To accommodate additional shrinkage of unseasoned floor timbers.
- Single storey frames and ground floor windows (not for slab on ground): 10 mm.
- Two storey frames and upper floor windows: 20 mm.

Construction at different rates or times
Monolithic structural action: If two or more adjoining sections of masonry, including intersecting walls, are constructed at different rates or times, rake back or tie the intersections between those sections so that monolithic structural action is obtained in the completed work.

Joining to existing
General: Provide a control joint where joining to existing structures. Do not tooth new masonry into existing work.

Mortar joints
Solid and cored units: Lay on a full bed of mortar. Fill perpends solid. Cut mortar flush.

Face-shell bedded hollow units: Fill perpends solid. Cut mortar flush.

Finish: Conform to the following:

- Externally: Tool to give a dense water-shedding finish.
- Internally: If wall is to be plastered, do not rake more than 10 mm to give a key.
- Thickness: 10 mm.

Cutting: Set out masonry with joints of uniform width and the minimum of cutting of masonry units.

Monolithic structural action

General: Provide brick or block header units, except in stretcher bond facework, to AS 3700 clause 4.11.2.

Spacing: 600 mm maximum.

Location: Conform to the following:

- At engaged piers.
- At engagement of diaphragms with the leaves in diaphragm walls.
- At intersections of flanges with shear walls.
- At intersections with supporting walls and buttresses.
- Between leaves in solid masonry construction.

Rate of construction

General: Regulate the rate of construction to eliminate joint deformation, slumping or instability.

Rods

Set out: Construct masonry to the following rods:

- 75 mm high units: 7 courses to 600 mm.
- 90 mm high units: 6 courses to 600 mm.
- 190 mm high units: 3 courses to 600 mm.

Protection

General: Keep the top surface of brickwork and blockwork covered to prevent the entry of rainwater and contaminants.

Temporary support

General: If the final stability of the brickwork or blockwork is dependent on (structural) elements to be constructed after the brickwork or blockwork, provide proposals for temporary support or bracing.

3.2 FACEWORK

Cleaning

General: Clean progressively as the work proceeds to remove mortar smears, stains and discolouration. Do not use an acid solution. Do not erode joints if using pressure spraying.

Colour mixing

Distribution: In facework, distribute the colour range of units evenly to prevent colour concentrations and banding.

Commencement

General: Commence at least 1 full course for blockwork, or 2 full courses for brickwork, below adjacent finished surface level.

Double face walls

Selection: Select face units for uniform width and double-face qualities.

Preferred face: Before starting, obtain a ruling as to which is the preferred wall face, and favour that face should a compromise be unavoidable.

Perpends

General: If it is proposed to use other than vertically aligned perpends in alternate courses, provide details.

Sills and thresholds

General: Solidly bed sills and thresholds and lay them so that the top surfaces drain away from the building.

Set out: Set out so that no unit is cut smaller than three quarters full width.

3.3 WALL TIES

Location

General: Space wall ties in conformance with AS 3700 clause 4.10 or BCA Figure 3.3.3.1 or AS 4773.2, as appropriate, and at the following locations:

- Not more than 600 mm in each direction.

- Adjacent to vertical lateral supports.
- Adjacent to control joints.
- Around openings.

Installation

Embedment: At least 50 mm into mortar making sure that mortar cover is 15 mm minimum to the outside face of the mortar.

3.4 CONTROL OF MOVEMENT

Joints

General: To AS 3700.

Filler material: Provide compatible sealant and bond breaking backing materials which are non-staining to masonry. Do not use bituminous materials with absorbent masonry units.

- Bond breaking materials: Non-adhesive to sealant, or faced with a non-adhering material.
- Foamed materials: Closed-cell or impregnated, not water-absorbing.

Joint filling:

- Installation: Clean the joints thoroughly and insert an easily compressible backing material before sealing.
- Sealant depth: Fill the joints with a gun-applied flexible sealant for a depth of at least two-thirds the joint width.

Fire rated control joints

General: If a control joint occurs in an element of construction required to have a fire resistance rating, construct the control joint using fire stopping materials so that the fire resistance rating of the element is not reduced.

Fire stopping: To AS 4072.1.

0332 STONE MASONRY

1 GENERAL

1.1 RESPONSIBILITIES

General

General: Provide stone masonry elements as follows and as documented.

- Of uniform quality within any grade.
- Selected for the optimum matching of visual properties such as colour and pattern.
- Sound and free from defects liable to affect its strength, appearance and durability under the intended conditions of use.

1.2 CROSS REFERENCES

General

Requirement: Conform to the following:

- *General requirements*.
- Materials and finishes schedule.
- *Landscape – walling and edging.*

1.3 STANDARD

General

Masonry: To AS 3700.

1.4 INSPECTION

Notice

Inspection: Give notice so that inspection may be made of the following:

- Proposed stone source (quarry, storage yard).
- Proposed mason's yard.
- Materials stored at the yard or on site.
- The prepared stone sample range.
- Stone in worked condition at the mason's yard.
- Stone laid out before fixing.
- Substrate prepared to receive the specified stonework.
- Control joints ready for insertion of joint filler.

1.5 TESTS

Stone

General: Obtain test samples, representative of each required type of stone, and have the tests carried out at the following stages:

- Before awarding a stone supply contract.
- On dimension stone prepared for the works, at intervals during the course of the works.

Natural stone tests schedule

Property to be tested	Test standard	Test criterion (if not in the test standard)	Number and frequency of tests
Unconfined compressive strength (dry and saturated): - Intact rock core specimens - Dimension stone	ASTM D7012 ASTM C170		
Surface absorption rate	ASTM C97		

Property to be tested	Test standard	Test criterion (if not in the test standard)	Number and frequency of tests
Porosity	ASTM C97		
Wet and dry density	ASTM C97		
Modulus of rupture	ASTM C99		
Flexural strength	ASTM C880		

1.6 SAMPLES

Stone samples
Number: 3.

Stone units: For each type and grade of stone, submit samples of each stone unit (e.g. block, panel, tile):

- The full size of the unit.
- Showing the expected range of variation of colour, pattern, texture, and surface finish in stone to be supplied.

Associated materials and products
Accessories: Submit 2 samples of each accessory proposed for fixing stonework.

Marking
General: Label samples for identification. Label natural stone samples to show the quarry source, section, bed and lift.

1.7 PROTOTYPES

General
Self-supported stonework: Provide a sample wall section consisting of at least 2 courses of masonry, each at least 1500 mm long, and including the following:

- Corner stones or quoins.
- Capping stones.
- Joint finishes (including mortar pointing and sealant).

1.8 SUBMISSIONS

Subcontractors
General: Submit name and contact details of proposed specialist stoneworker.

Design
Bird proofing: Submit details of the proposed method together with evidence of proven performance including addresses of existing installations, date of installation, contact personnel at the installation addresses, brief history of the installations, and current performance data.

Materials
Proposed mortar mix: Submit details of the proposed mix, at least 7 days before commencing stonework.

Supplier’s data: Submit statements from the stone supplier, with the following information:

- The supplier’s experience in the required type of work.
- Production capacity for material of the required type, sizes and quantity.
- Particulars of established quality control procedures (if any), and the category of the procedures to the relevant standard.
- The physical properties of the required material.
- Lead times for delivery of the material to the site.

Shop drawings
General: Submit shop drawings showing the following where applicable:

- Projecting courses.
- Cutting details for mouldings such as lintels, sills, steps and cornices.
- Stonework setting out.

- Position and identifying number of each stone.
- Dimensions of each stone and lay of natural bed.
- Lifting detail and fixing detail of each stone.
- Proposed dowel restraints for column and mullion joints.

Execution
Supervision: Submit the names and qualifications of proposed bench masons.

1.9 TOLERANCES

Dimension stone units
Maximum deviation from required dimensions:
- Loadbearing stone: ± 2 mm.
- Other stone: ± 10 mm.

Masonry construction
Conformance: Conform to AS 3700 Table 11.1.

2 PRODUCTS

2.1 NATURAL STONE

General
General: Conform to the accepted samples and prototypes.

Stone types
Sandstone defects: Minor shale laminae or interbeds and minor concentrations of carbonaceous material (tea leaves) are acceptable in visible faces at ground level or in public areas. Neither defect is acceptable in carved or moulded work.

Granite: Igneous stone (e.g. granite) obtained from quarry stone extracted in blocks sufficiently large to suit the project requirements, and containing no more than a small degree of microcracking.

Stone selection
Grading: Select stone of the designated quality grade.

Matching: Within each grade, select stone for the optimum matching of visual properties such as colour and pattern.

2.2 MORTAR

Mortar materials
Cement type to AS 3972: GP.

White cement: Iron salts content ≤ 1%.

Masonry cement: To AS 1316.

Lime: To AS 1672.1.

Sand: Fine aggregate with no clay content, free from efflorescing salts and selected for colour and grading.

Admixtures: Do not provide admixtures.

Water
General: Clean and free from any deleterious matter.

Mortar mix
Batching: Batch by weight and machine mix.

Mix compressive strength: ≤ compressive strength of the stone bedded on it.

Mix permeability: ≥ stone permeability.

Preparing lime putty:
- Using hydrated lime: Add lime to water in a clean container and stir to a thick creamy consistency. Leave undisturbed for at least 16 hours. Remove excess water and protect from drying out.
- Using quicklime: Run to putty as soon as possible after receipt of quicklime. Partly fill clean container with water, add lime to half the height of the water, then stir and hoe ensuring that no lime remains exposed above the water. Continue stirring and hoeing for at least 5 minutes after all

reaction has ceased, then sieve into a maturing bin. Leave undisturbed for at least 14 days. Protect from drying out. Take appropriate safety measures.

Sand stockpile

General: Before commencing stonework, stockpile sand sufficient for the whole of the works. Keep stockpiled sand dry.

2.3 COMPONENTS

Wall ties

Standard: To AS/NZS 2699.1.

- Type: A.

Classification

Durability classification to AS/NZS 2699.1.

Conformance; Provide ties in conformance with the **Wall ties category table**.

Wall ties category table

Classification to AS/NZS 2699.1 (Type A)	Service conditions
Light duty	Normal cavity construction
Medium duty	Tie bonding at abutments
Heavy duty	Cavities > 60 mm wide

Corrosion protection: To BCA Table 3.3.3.1.

Corrosion resistance and durability

Compliance: Conform to the **Corrosion resistance and durability tables**, or provide proprietary products with metallic and/or organic coatings of equivalent corrosion resistance:

- Galvanize: To AS/NZS 4680.
- Built-in products below damp proof course: Stainless steel 316 or engineered polymer.
- Mortar: Below damp-proof course provide mortar grade M4.

Corrosion resistance and durability table – Atmospheric corrosivity category – A and B to AS/NZS 2312

Situation	Steel lintels (each surface)	Wall ties, connectors and other structural steel accessories above damp proof course (each surface)	Minimum cement content (mortar grade) above damp proof course
External	Galvanize after fabrication 600 g/m^2	- Galvanize after fabrication 300 g/m^2 - Metallic-coated sheet Z600 - Galvanized wire 470 g/m^2	M2

Corrosion resistance and durability table – Atmospheric corrosivity category – C to AS/NZS 2312

Situation	Steel lintels (each surface)	Wall ties, connectors and other structural steel accessories above damp proof course (each surface)	Minimum cement content (mortar grade) above damp proof course
External	Galvanize after fabrication 600 g/m^2	- Galvanize after fabrication 600 g/m^2 - Galvanized wire 470 g/m^2	M3

Corrosion resistance and durability table – Atmospheric corrosivity category – D and F to AS/NZS 2312

Situation	Steel lintels (each surface)	Wall ties, connectors and other structural steel accessories above damp proof course (each surface)	Minimum cement content (mortar grade) above damp proof course
External	- Stainless 316 - Galvanize after fabrication 600 g/m^2 plus organic coating [1]	- Stainless 316 - Engineered polymer	M4
[1] Avoid organic coating in Category F zones.			

Connectors and accessories
Standard: To AS/NZS 2699.2.

Flexible masonry ties: If accommodation of movement is required at control joints and where masonry abuts structural elements such as column faces and slab soffits, provide details.

Flashings and damp-proof courses
Standard: To AS/NZS 2904.

3 EXECUTION

3.1 GENERAL

Mortar mixing
General: Measure volumes accurately to achieve the specified proportions. Machine mix for at least six minutes.

Protection from contamination
General: Protect masonry materials and components from ground moisture and contamination.

Bond
Type: Stretcher bond.

Building in
Embedded items: Build in wall ties and accessories as the construction proceeds.

Construction at different rates or times
Monolithic structural action: If two or more adjoining sections of masonry, including intersecting walls, are constructed at different rates or times, rake back or tie the intersections between those sections so that monolithic structural action is obtained in the completed work.

Joining to existing
General: If jointing to existing work is required, provide a straight joint. Do not tooth new masonry into existing work.

Joints
Finish:

- Externally: Tool to give a dense water-shedding finish.
- Thickness: 10 mm.

Cutting: Set out joints of uniform width and minimise cutting.

Rate of construction
Regulate the rate of construction to eliminate joint deformation, slumping or instability.

Weather protection
General: Keep the top surface of stonework covered to prevent the entry of rainwater.

3.2 BENCH MASON

Supervision
General: Arrange to have on site a bench mason qualified to supervise stonework fixing and site adjustments to joints and surface finishing.

3.3 WORKMANSHIP GENERALLY

Storing
General: Store stone so that it is protected from the weather and atmospheric pollution, clear of the ground on its natural bed, on supports which do not locally overstress it, and in conditions suitable to promote good seasoning without staining, marking or damage.

Cutting
General: Perform the necessary cutting and shaping of stone to designated profiles including weathering, jointing, chasing, forming grooves and drilling for handling and fixing. Work the bed, face and back joints of the stone square and true.

Carving and moulding
General: Achieve a clean sharp finish.

Visual variations
General: If the accepted samples and prototype panels have a range of variation in colour, pattern, texture or surface finish, distribute the production panels throughout the work so that local concentrations of similar variations do not occur.

3.4 LAYING UNITS

Bedding
General: Remove dust and foreign material from the bedding surfaces. If necessary adjust the moisture content of the stone units so that adverse effects, such as reduced bond, are kept within acceptable limits. Where possible, bed and joint the stone in one operation. Lay each stone on a full bed of mortar. Solidly fill vertical joints, joggles and cramps as the work proceeds. Point up joints around flashings as necessary.

Temporary support
General: Provide support as necessary to the stone while the mortar is curing, using bracing, joint spacers, or both.

Bracing and joint spacers: Non-damaging and non-staining softwood wedges or laths soaked in water. Do not allow metal pinch bars to bear directly on the stone.

Later construction: If the final stability of the stonework is dependent on (structural) elements to be constructed later, provide proposals for temporary support or bracing.

Raking and toothing
General: Raise advanced work no more than 1.5 m above the general level, and rake back. Do not tooth stonework for subsequent additions except where toothing is shown on the drawings.

Bonding
General: Bond the masonry so as to provide stability and monolithic structural action to the stonework assembly.

3.5 FIXINGS

Provision of fixings
General: If the necessary fixings for stonework are not otherwise provided as part of the structure provide suitable fixings sufficient to support and restrain each stone and effectively resist the loads from permanent, imposed, wind and earthquake actions to which it will be subjected in service.

Metals for fixings
General: Provide metal fixings that are:

- Corrosion resistant e.g. non-ferrous metal or stainless steel.
- Stamped for identification.
- Compatible with the materials with which they will be in contact or effectively insulated from electrochemical reaction with incompatible materials.

3.6 WALL TIES

Location
Provide wall ties spacing in conformance with AS 3700 clause 4.10 Wall ties or BCA Figure 3.3.3.1 as follows:

- Not more than 600 mm in each direction.
- Adjacent to vertical lateral supports.

- Adjacent to control joints.
- Around openings.

Installation
Embedment: At least 50 mm into mortar ensuring that mortar cover is 15 mm minimum to the outside face of the mortar.

3.7 JOINTING AND POINTING

General
General: Carry out jointing and pointing simultaneously to form a homogeneous bed.

3.8 CONTROL OF MOVEMENT

Joints
Requirement: Provide joints as follows:
- Maximum length of continuous wall: 6 m.
- Maximum vertical spacing: 8 m.
- Width of vertical joint: ≥ 10 mm ≤ 20 mm.
- Width of horizontal joint: ≥ 15 mm ≤ 20 mm.

3.9 SURFACE TREATMENTS

Abutting surfaces
General: Seal concealed faces of stone walling or facing panels where they abut brickwork or concrete.

Dissimilar stones
Isolation: Isolate contact surfaces of dissimilar types of stone with a membrane. Isolate sedimentary stonework from brickwork and other masonry to prevent salts movement.

3.10 COMPLETION

Maintenance manual
General: On completion submit a maintenance manual setting out a program for regular maintenance cycles at not more than five-year intervals. Include stonework cleaning, desalination, inspection and repair of joints and flashings, checking rainwater goods for blockages and breakdown, and detection of potential failures arising from movement or other causes. Include particulars of stone source, type of stone, and jointing materials.

Cleaning
Cleaning: Leave the stonework clean on completion.

0344 STEEL – HOT-DIP GALVANIZED COATINGS

1 GENERAL

1.1 RESPONSIBILITIES

General
General: Provide hot-dip galvanized coatings that controls atmospheric corrosion to structural steelwork or steel products in the time to first maintenance.

1.2 CROSS REFERENCES

General
Requirement: Conform to the following:
- *General requirements*.
- *Landscape – fences and barriers.*

1.3 STANDARDS

General
Coating: To AS/NZS 4680.

Coating on fasteners: To AS 1214.

Durability: To AS 2309 and AS/NZS 2312.

Metal finishing
Steel preparation methods: To AS 1627.

Coating mass/thickness minimum: To AS/NZS 4680.

Threaded fasteners coating mass/thickness minimum: To AS 1214 Table 2.

1.4 INSPECTION

Notice
Inspection: Give notice so that inspection may be made of the following:
- Coating appearance and thickness, at the galvanizing plant.

1.5 TESTS

Galvanizing tests
Coating mass tests: To AS/NZS 4680 Appendix G.

Magnetic method: To AS 2331.1.3.

Coating thickness tests: To AS/NZS 4680 Appendix G.
- Test method: To AS/NZS 4680 clause 9 and AS/NZS 4680 Appendix G.

Test method: To AS/NZS 4680 Appendix G.
- Frequency of tests: To AS/NZS 4680 clause 9.2.

Sampling plan: to be in accordance with the recommendations of AS 1214 Appendix B for threaded fasteners, or to AS/NZS 4680 Appendix B, as appropriate
- Method: To AS/NZS 4680 Appendix G clause G5.

Testing authority: NATA registered galvanizing plant.

1.6 SUBMISSIONS

Holes and lifting lugs
General: If holes and lifting lugs are required to facilitate handling, filling, venting and draining during galvanizing, submit details on size and location.

Detailing features
General: If design and fabrication features of the items to be galvanized leads to difficulties during galvanizing, identify these and submit details for improvement.

2 EXECUTION

2.1 GENERAL

Care
Dimensional change: If design and fabrication features of items to be galvanized are likely to lead to dimensional change or distortion, identify these and submit proposals for its minimisation.

Embrittlement: Take due care to avoid embrittlement of susceptible steels.

Mechanical properties: Avoid mechanical damage. Ensure that mechanical properties of the base metal do not change.

Surface preparation
Surface contaminants and coatings generally: Chemical clean, then acid pickle.

Chemical cleaning: To AS 1627.1.

Acid pickling: To AS 1627.5.

- Inhibitor: Required.

Post treatment
General: Passivate.

Drilling after completion of hot-dip galvanizing
Repair: Prime drill hole surfaces to AS/NZS 4680 clause 8 before the surfaces begin to corrode.

Coating
Threaded fasteners: To AS 1214.

Structural sections
Cold worked items: Except for hollow sections, anneal to 650°C before galvanizing.

Hollow sections: Provide seal plates with breather holes.

Surface finish
Standard: To AS/NZS 4680 clause 7.

Coating quality: Continuous, adherent, smooth or evenly textured and uniform, free from defects detrimental to the end use of the finished article, such as lumps, blisters, gritty areas, uncoated spots, acids and black spots, dross and flux.

- Silicon killed steels: Dull grey is acceptable.

Friction-type bolted connections: Treat coated contact surfaces to achieve the required design slip factor, without removing excessive coating thickness.

- Contact surface preparation: To GAA After-fabrication hot dip galvanizing Chapter 4.

Slip factor test: To AS 4100 Appendix J.

Surplus zinc on fastener threads: Remove.

Coating repair
Rejection: If uncoated surfaces or areas damaged by handling at the galvanizing plant exceed the limits specified for repair in AS/NZS 4680 clause 8, reject the galvanizing.

Extent and methods: To AS/NZS 4680 clause 8.

Preparation for architectural finishes
Coarse preparation: Remove spikes, and ensure edges are free from lumps and runs.

Light sweep blasting before painting: Required.

- Maximum zinc removal: 10 µm.
- Abrasive grade (range): 150 – 180 µm.
- Abrasive type - clean ilmenite or garnet.
- Blasting angle to surface: 45° maximum.
- Blast pressure (maximum): 275 kPa.
- Distance of nozzle from surface (range): 350 – 400 mm.
- Nozzle type: 10 – 13 mm minimum diameter venturi type.

2.2 SITE WORK

Site welding

Grinding of edges: Permitted.

Weld areas: Reinstate coating to AS/NZS 4680 clause 8.

Site coating reinstatement

Rejection: If any item has damaged areas exceeding the limits specified for repair in AS/NZS 4680 clause 8.1, reject the object.

Extent: Areas damaged by transport, site welding, site flame cutting, site handling, or erection.

Method: To AS/NZS 4680 clause 8.

1424 LANDSCAPE – MAINTENANCE

1 GENERAL

1.1 RESPONSIBILITIES

General

Landscape maintenance: Maintain the contract area during the landscape maintenance period.

Landscape maintenance period: From completion of landscape establishment period and through to the end of the defects liability period.

Summary of responsibilities:

- Watering of lawn, garden bed areas, pots.
- Weeding of lawn, garden bed areas, and pavement.
- Supply and spreading of fertiliser to lawn, garden bed areas and pots.
- Supply and installation of mulch to existing garden bed areas and pots.
- Pruning, trimming and tree surgery.
- Pest and disease control of lawn, shrubs and trees.
- Mowing and edge trimming to all lawn areas including collection and removal of clippings.
- Replacement of dead or failed plants.
- Maintenance of irrigation systems.
- Removal of rubbish and debris in garden areas.
- Keeping of a log book.
- Monthly reports.

Maintenance procedures: To accepted horticultural and arboricultural practice.

1.2 CROSS REFERNECES

General

Requirement: Conform to the following:

- *General requirements*.
- *Landscape – soils.*
- *Landscape – soft surfaces.*
- *Landscape – planting.*
- *Irrigation.*
- *Landscape – establishment.*
- *Landscape – furniture and fixtures.*
- *Concrete pavement.*
- *Segmental pavers – mortar bed.*

1.3 THE SITE

Site restrictions

Entry permits: Make available, to persons entering designated secure areas, valid entry permits. Ensure these persons comply with conditions of entry.

List: At least 10 working days before entry is required, submit the full name, address, and date and place of birth of persons required to enter designated secure areas.

- Purpose of submission: Review.

Occupied premises

General: For the parts of the site designated as occupied premises:

- Allow occupants to continue in secure possession and occupancy of the premises for the required period.

- Make available safe access for occupants.
- Arrange work to minimise nuisance to occupants and ensure their safety.
- Protect occupants against weather, dust, dirt, water or other nuisance, by such means as temporary screens.

Proposals: Submit details of proposed methods.

- Purpose of submission: Information only.

No smoking policy

Policy: Smoking is only permitted in designated zones.

Protection of persons and property

Temporary works: Provide and maintain required barricades, guards, fencing, shoring, temporary roadways, footpaths, signs, lighting, watching and traffic flagging.

Accessways, services: Do not obstruct or damage roadways and footpaths, drains and watercourses and other existing services in use on or adjacent to the site. Determine the location of such services.

Property: Do not interfere with or damage property which is to remain on or adjacent to the site, including adjoining property encroaching onto the site, and trees.

Rectification

Accessways, services: Rectify immediately any obstruction or damage to roadways and footpaths, drains and watercourses and other existing services in use on or adjacent to the site. Provide temporary services whilst repairs are carried out.

Property: Rectify immediately any interference or damage to property which is to remain on or adjacent to the site, including adjoining property encroaching onto the site, and trees.

1.4 GENERAL

Contractor and staff

Affiliation: Suitable professional qualifications acceptable to the principal.

Representative: Nominate a senior partner/personal experienced in maintenance nursery practices and horticulture, to be responsible for taking and carrying out instruction, and reporting to the principal.

Special instructions

Priority: If instructed by the principal attend to certain areas and procedures as a priority. Obtain approval for additional costs prior to commencement of works.

Reporting

Monthly report: Submit regular reports by the last Friday of each month:

- Of the general status of works.
- Include soil test results as required for the fertilising programs.
- Plant replacement requirements.

Incident reports: Report immediately verbally and confirmed in writing any disturbance or incidence affecting or likely to affect the day to day scheduling of works.

Notice

Inspection: Provide two days notice of the following operations:

- Application of herbicide.
- Application of fertiliser.
- Watering.
- Each site maintenance visit.
- Public amenity: Give notice of any work affecting public access or amenity on the Thursday of the week before the work is planned.

Log book

Records: Log the following on a weekly basis:

- Description, time and method of application of toxic material.
- Maintenance work details.
- Inclement weather to verify inability to carry out work within the specified time frame.

Availability: Upon request.

Disruption of works by others
Other contractors: Make arrangements to work around the disturbance.

Warranty
Parties: Supplier(s) to the principal.

Form: All the plants supplied under these works are true-to-species and type, and free of disease, fungal infection and/or any other impediment to their future growth and that they have been fully acclimatised for the conditions of the site.

Submission of warranty: At the time of each delivery.

Plant hire
Existing arrangements: Take responsibility for the re-hiring, installation, care and maintenance of all internal plant material currently under existing plant hire contract for the duration of the maintenance contract.

2 EXECUTION

2.1 GENERALLY

Weeding
Weeds: Unwanted broadleaf plants and grasses considered invasive to the locality.

Program:
- Lawns: Quarterly and as determined by the relationship of the general lawn condition and weed growth.
- Trees and shrubs: As required for planted, paved and mulched areas to be weed free when observed at bi-weekly intervals.

Method: Clear and keep clear vigorous ground covers 200 mm from the base of any shrub or tree:
- Small areas: By hand.
- Large areas: Proprietary herbicides.

Herbicide application: Avoid windy days or if rain is likely to follow within 12 hours.

Apply:
- To the manufacturer’s instructions and material data and safety sheets.
- When the weather is humid with moderate temperatures and maximum sunlight.
- When the ground has adequate soil moisture.

Pest and disease control
The contractor is responsible for the control of any pest or disease which may affect the lawn and garden bed areas.

Actions:
- Identify the problem.
- Execute the correct treatment until the problem has been eliminated.
- Apply hazardous material out of normal working hours.
- Protect staff and public.

2.2 LAWN

Mowing and trimming
Litter: Remove litter and fallen branches prior to mowing.

Height: Consistent with the growth habit of the grass variety and maintained at 25 mm to 40 mm throughout the year.

Program: Weekly during the mowing season, November to March, and at bi-weekly intervals during April to October. Do not mow under wet conditions.

Raking: Once every month before mowing during the mowing season with a flexible rake. On alternate mowings, adopt a north-south and east-west pattern.

Edges: At the same time as mowing, trim lawn edges to plant beds, pathways, base of trees and other obstacles. Ensure trees and shrubs are not damaged.

Clippings distribution: Off-site.

Non-selective herbicide: Ensure application does not exceed the area limits of normal manual trimming. Repair all damage from overuse or over spray.

Fertilising

N:P:K (nitrogen:phosphous:potassium) ratio: Balanced 10:4:6.

Rate: To the manufacturer's recommendation.

Regular application: Each September and April.

Additional application: Each November and February at reduced rates.

Soil pH adjustment: Apply additional fertilisers and soil conditioners as indicated from soil testing or from the physical soil structure. Maintain a pH range of 5.5 – 6.5.

pH testing program: Two year schedule commencing in the first year of the contract.

Spreading:

- Dry: Crush lumps and broadcast dry material by hand or mechanically when the lawn is dry.
- Spray: Acceptable.
- Ensure fertiliser does not leach to adjoining planted beds particularly those with sensitive native trees and shrubs.

Topdressing

Topdressing material for established lawns: Weed free imported sandy topsoil to a depth of 5 mm.

Program: The spring following establishment.

Topdressing material for remediation of depressions or irregularities: Apply coarse or medium soil, to AS 4419, suitable for application to turf or grass seeded areas.

Renovation

Well established lawns of sandy soil profile: Renovate by dethatching or verti-cutting.

Program: In association with and prior to topdressing and fertilising procedures.

2.3 TREES AND SHRUBS

Pruning and trimming

General: Prune to reflect the natural growth flowering and regrowth habit of the individual species. Shrubs: Prune after flowering.

Program: Spring and Summer and on a spot basis as required.

Hedge trimming: Schedule trimming at times which will maintain the character and design of hedges. Allow up to three times per season.

Tip pruning: Do not remove buds before the flowering season in those plants that have terminal flowers.

- Purpose: To encourage development of new shoots during the active growing season.
- Method: The removal of the top 25 mm or growing tip of each branch.

Radical pruning:

- Purpose: To maintain a hedge or formal shape or when a particular problem, growth habit, damage, or disease requires branch removal.
- Clear and keep clear vigorous groundcovers 200 mm from the base of any shrub or tree.
- Use only tools fit for purpose.

Trees: Prune to:

- Eliminate diseased or damaged growth, avoid inter-branch contact and thin out crowns in a natural manner.
- Maintain sight lines to signs and lights.
- Maintain visibility for personal security.

Tree branch removal:

- To AS 4373.
- Give notice and engage a suitably qualified 'arborist'.

Fertilising

Fertilising program: Base the program on soil testing results.

Soil testing: Undertake soil tests as follows:

- At the commencement of the contract.
- Take samples from a cross section of planting beds.

Soil pH adjustment: Apply additional fertilisers and soil conditioners as indicated from soil testing or from the physical soil structure. Maintain a pH range of 5.5 – 6.5.

Shrubs:

- N:P:K ratio: Balanced 10:4:6.
- Rate: To the manufacturer's recommendation and cultivate two rows into the soil 100 mm deep.
- Regular application: Each September and March.
- Ensure the appropriate dosage for sensitive native species.

Trees:

- Application: Apply pill to the root zone at a distance from the trunk equal to the spread of the foliage. Make holes 400 mm deep to take the pill. Backfill with sand, equally spaced around the plant.

Micro nutrients: Apply 1 kg of urea in 20 litres of water per 100 m^2, through a hose proportioner every four weeks during Summer.

Stakes and ties

Generally: If plants are unable to be self supported or if stakes are damaged, stake or restake the plants as follows:

- Drive three hardwood stakes placed obliquely with the first stake on the opposite side to the prevailing winds.
- Do not single stake large plants.

If plants are robust with well developed systems and are strong enough to no longer require support, remove stakes and ties.

Plant replacements

General: Replace all evergreen plants that have died or lost 50% of their normal foliage cover.

Provide replacement plants as follows:

- Of the same species and variety and of the closest commercially available size.
- Of uniformly high quality stock equal to the best commercially available.
- Representative of optimum growth for the species as restricted by the container size.
- With a balanced root system in relation to the size of the plant and conducive to successful transpiration. Inspect the root conditions of plants by knocking plants from their containers.
- Without signs of having been stressed at any stage during their development due to inadequate watering, excessive shade/sunlight, suffered physical damage or have restricted habit due to growth in nursery rows.
- Healthy, well grown, hardened off specimens of good shape and free from pests and disease.
- Well rooted and without any indication of having been restricted (pot bound) or damaged at any time.
- Been grown in their final containers for not less than twelve (12) weeks.

2.4 WATERING

Lawn and planted areas

Generally: Maintain a vigorous healthy appearance.

Application rates: Soak to a depth of 150 mm for lawn and 300 mm for planting. Avoid frequent dampening of the surface. Allow the surface of the soil to partially dry out between waterings. Confirm soaked depth and record in the log book.

Timing: Water at times of day to minimise water evaporation loss. Do not water during the hottest period of Summer days.

Public areas without installed watering systems: Water only in excessive dry periods. Make available all necessary equipment to carry out hand and sprinkler watering as required.

Water restrictions: Coordinate the water supply and confirm the watering regime against federal and state government legislation and restrictions at the time.

Hand watering
General: Manually water all lawn and planting areas in the absence of an irrigation system or until the proposed irrigation system is fully operational.

Irrigation
Irrigation system program: To suit the following:
- The precipitation requirements of the individual zones/stations with regard to types of plants.
- The infiltration rate of the soil/medium and associated physical factors seasons, evaporation, exposure, topography, local authority restrictions.
- An allowance for adjustment or shut down during and after periods prolonged heavy rains.
- To co-ordinate water supply and to confirm watering regime against federal and state government legislation and restrictions at the time.

Equipment maintenance:
- Check all components for proper operation.
- Repair or replace damaged component with equivalent parts.
- Flush any dirt or foreign matter from the system and clear all blockages.

Operation: Ensure by adjustment or replacement of components, that the overall operation of the system is efficient and operational for the entire planting establishment period.

Supervision: Prevent excessive use of water.

Programming
Automated systems: Check that they are programmed to coincide with optimum periods of water pressure and water absorption.

Public access: Do not inconvenience persons occupying the site by water spray or block normal pedestrian or traffic flow.

2.5 MULCHING

General
Clean up: Remove all mulching materials off lawn or paved areas and maintain a clean and tidy appearance when viewed on a weekly basis.

Depth: Maintain a minimum depth of:
- 75 mm for organic mulch.
- 50 mm for gravel mulch.

Top up: Areas of excessive wear.

Appearance: Maintain to keep clean and tidy with no soil disturbance evident on the surface of the mulch.

2.6 INCIDENTAL WORKS

Supplementary works
General: Execute the following:
- Removal of rubbish arising from maintenance work.
- Removal of leaf litter fortnightly during leaf fall.
- Wash paving on completion of herbicide application.

Paving
Slip resistance tests:
- Test to AS 4663 annually.
- Notify deviation from the design value.
- Rectify the surface and re-test as required to comply with the design value.

Furniture, signage and barriers
Scope: All fixed and movable features noted in the record drawings.

Furniture and pots:
- Move and relocate as required for maintenance of the area.
- Repair of replace items damaged by the maintenance contract staff.

Signage: Maintain sight line visibility.

Drains

General: Inspect and clean all drainage structures and pit covers and ensure that they are in proper working order.

Frequency: As required so that all overflow drains are cleared when observed at fortnightly intervals.

3 SELECTIONS

3.1 MAINTENANCE REPORT SCHEDULE

Monthly reports

Minimum requirements: Check list.

Item	Action
Plant material	Replace failed plants
	Additional planting
	Treat for disease or insect attack
	Tree surgery
	Fertilising generally
	Fertilising for specific nutrient deficiencies
	Thin out planting
	Pruning/trimming
Turf	Returfing
	Seeding
	Treat for disease
	Topdressing
	Weeding
	Mowing/trimming
Soil	Erosion/bank stabilisation
	Additional soil
	Soil conditioner
	Weeding
Mulch	Top up mulch
Rubbish removal	Generally remove bottles, paper, cigarette butts etc.
	Remove leaf, litter from path and paved areas
Irrigation	Replace parts
	Repair
	Clean out
	Adjust
	Clean out subsurface drains
Paving and pathways	Repair dips, hollows, irregularities
	Remove stains and graffiti
	Replace sections of uplift
	Clear main pathway drains of debris
	Weeding
	Test against AS 4663
Infant playground	Ensure that all play structures are secure and in working order
Fencing	Repair fencing

Item	Action
Furniture and hard fixtures	Bench/seat
	Bollard
	Lighting
	Barriers

3.2 MAINTENANCE PROCEDURE SCHEDULE

Maintenance scope of works
Minimum attendance: Check list.

WEEK	SPRING (Sept, Oct, Nov)	SUMMER (Dec, Jan, Feb)	AUTUMN (Mar, Apr, May)	WINTER (Jun, Jul, Aug)
1	Mow and trim lawns	Mow lawns; weed	Mow lawns	Weed
2	Weed; trim and adjust trees and shrubs	Weed; mow lawns, trim and adjust trees and shrubs	Weed; mow lawns, trim and adjust trees and shrubs	Mow and trim lawns Trim and adjust trees and shrubs
3	Mow and fertilise lawns; treat plant material for insects and disease	Mow lawns; weed; treat plant material for insects and disease	Mow and trim lawn	Weed
4	Weed; topdress, condition lawns and oversow bare patches; issue maintenance report	Weed; mow and trim lawns; issue maintenance report	Weed; mow lawns; issue maintenance report	Mow lawns; issue maintenance report
5	Fertilise all trees and shrubs in garden beds; mow and trim lawns	Mow lawns; weed	Mow lawns	Mow lawns
6	Weed; inspect mulch for deficiencies in cover; check and adjust irrigation	Mow lawns; check and adjust irrigation	Weed; inspect mulch for deficiencies in cover; check and adjust irrigation	Mow and trim lawns; treat for insects and disease; check and adjust irrigation
7	Reinstate mulch as required; treat plant material for insects and disease; mow lawns	Mow lawns; weed	Reinstate mulch as required; mow, trim and fertilise lawns	Weed
8	Weed; inspect condition of paving and furniture; issue maintenance report	Mow and trim lawns; inspect condition of paving & furniture; issue maintenance report	Weed; inspect condition of paving and furniture; issue maintenance report	Mow lawns; Inspect condition of paving and furniture; issue maintenance report
9	Mow and trim lawns	Mow lawns; treat plant material for insects and disease	Mow lawns	Weed
10	Weed; mow lawns	Mow and topdress lawns	Weed; treat plant material for insects and disease	Mow and trim lawns

WEEK	SPRING (Sept, Oct, Nov)	SUMMER (Dec, Jan, Feb)	AUTUMN (Mar, Apr, May)	WINTER (Jun, Jul, Aug)
11	Mow and fertilise lawns; trim and adjust trees and shrubs	Mow lawns; trim and adjust lawns; weed	Mow and trim lawns; trim and adjust trees and shrubs	Prune back trees and shrubs after flowering
12	Weed; mow lawns; treat plant material for insects and disease	Mow, trim & fertilise lawns	Weed	Mow lawns; treat plant material for insects and disease
13	Check and adjust irrigation; mow lawns; issue maintenance report	Check and adjust irrigation; mow lawns; weed; issue maintenance report	Check and adjust irrigation; mow lawns; weed; issue maintenance report	Check and adjust irrigation; weed; issue maintenance report

3.3 IRRIGATION SCHEDULE

Irrigation maintenance scope of works
Minimum attendance: Check list.

General:	
Filters – mainline	Monthly
Electrical source output (auto system)	Monthly
Controller (automatic systems)	Monthly
Operation – progression - Sta to Sta.	Weekly
Proper activation of valves	Monthly
Proper timing of stations	Bi-annually
Proper time and day readings	Weekly
Exterior appearance	Bi-annually
Valve operation	Bi-annually
Open, close completely (weeping)	Weekly
Sprinkler operation	Weekly
Rotaries – clogged nozzles	Bi-monthly
Plant obstructed pattern	Bi-monthly
Arc coverage	Bi-monthly
Radius adjustment	Bi-monthly
Pop-up action	Bi-monthly
Riser seal leaks	Bi-monthly
Set to grade	Bi-monthly
Coverage pressure	Bi-monthly
Rotational speed	Bi-monthly
Clogged screens	Bi-monthly
Head damage	Bi-monthly
Piping	Bi-monthly
Leaks – broken or cracked pipe	As Needed
Bad solvent welds, bad threaded	As Needed
Connection	As Needed
Clogged pipe	As Needed

Studios

Adelaide
Level 1 82 Waymouth Street
Adelaide SA Australia 5000
T +61 8 8220 5000
E adelaide@hassellstudio.com

Brisbane
36 Warry Street
Fortitude Valley QLD Australia 4006
T +61 7 3914 4000
E brisbane@hassellstudio.com

Hong Kong
22F, 169 Electric Road
North Point Hong Kong
T +852 2552 9098
E hongkong@hassellstudio.com

London
1 Curtain Place
London EC2A 3AN United Kingdom
T +44 20 7490 7669
E london@hassellstudio.com

Melbourne
61 Little Collins Street
Melbourne VIC Australia 3000
T +61 3 8102 3000
E melbourne@hassellstudio.com

Perth
Level 1
Commonwealth Bank Building
242 Murray Street
Perth WA Australia 6000
T +61 8 6477 6000
E perth@hassellstudio.com

San Francisco
Level 7 650 California Street
San Francisco CA 94108 United States
T +1 415 860 7067
E sanfrancisco@hassellstudio.com

Shanghai
12F base 45 Caoxi North Road
Xuhui District Shanghai 200030 China
T +8621 5456 3666
E shanghai@hassellstudio.com

Singapore
33 Tras Street
#02-01 078973 Singapore
T +65 6224 4688
E singapore@hassellstudio.com

Sydney
Level 2 Pier 8/9
23 Hickson Road
Sydney NSW Australia 2000
T +61 2 9101 2000
E sydney@hassellstudio.com

Document Control

Rev	Date	Approved By	Description
A	16.08.2021	AE	For Tender

© Hassell. This document and the ideas incorporated within, as an instrument of professional service, is the property of Hassell. It shall not be used or reproduced in any manner what so-ever, in whole or in part, or for any other project without the prior permission of Hassell.

DRAWING INDEX

DRAWING No.	DRAWING TITLE
GENERAL	
HSL_S1B_0001	COVER SHEET
HSL_S1B_0002	DRAWING INDEX
HSL_S1B_0003	DRAWING LEGEND
HSL_S1B_0004	PLANTING SCHEUDLE
SITE PLAN	
HSL_S1B_0100	SITE PLAN
GENERAL ARRANGEMENT PLANS	
HSL_S1B_1001	GENERAL ARRANGEMENT PLAN SHEET 1 OF 10
HSL_S1B_1002	GENERAL ARRANGEMENT PLAN SHEET 2 OF 10
HSL_S1B_1003	GENERAL ARRANGEMENT PLAN SHEET 3 OF 10
HSL_S1B_1004	GENERAL ARRANGEMENT PLAN SHEET 4 OF 10
HSL_S1B_1005	GENERAL ARRANGEMENT PLAN SHEET 5 OF 10
~~HSL_S1B_1006~~	~~GENERAL ARRANGEMENT PLAN SHEET 6 OF 10~~
HSL_S1B_1007	GENERAL ARRANGEMENT PLAN SHEET 7 OF 10
HSL_S1B_1008	GENERAL ARRANGEMENT PLAN SHEET 8 OF 10
HSL_S1B_1009	GENERAL ARRANGEMENT PLAN SHEET 9 OF 10
HSL_S1B_1010	GENERAL ARRANGEMENT PLAN SHEET 10 OF 10
HSL_S1B_5001	DETAIL PLAN SHEET - BRIDGE
DETAILS	
HSL_S1B-5201	DETAILS - FURNITURE & FIXTURE
HSL_S1B-5202	DETAILS - FURNITURE & FIXTURE
HSL_S1B-5203	DETAILS - FURNITURE & FIXTURE
HSL_S1B-5301	DETAILS - PAVING
HSL_S1B-5302	DETAILS - PAVING
HSL_S1B-5401	DETAILS - PLANTING
SPECIFICATIONS	
HSL_S1B-6001	MATERIALS & FINISHES SCHEDULE
HSL_S1B-6003	LANDSCAPE SPECIFICATION
APPENDIX	
APPENDIX 1	PORPHYRY SETTS VEHICULAR PAVEMENT - 'STANDARD DRAWINGS CITY OF RYDE'
APPENDIX 2	GRANITE EXPANSION JOINT - 'STANDARD DRAWINGS CITY OF RYDE'
APPENDIX 3	GRANITE ISOLATION JOINT - 'STANDARD DRAWINGS CITY OF RYDE'
APPENDIX 4	TREE PIT WITH GRATE AND GRANITE BANDING TYPICAL - 'STANDARD DRAWINGS CITY OF RYDE'
APPENDIX 5	STEEL EDGE TYPES GRANITE PAVING TO GARDEN BED 'STANDARD DRAWINGS CITY OF RYDE'

C DRAWING ADDED

C UPDATED

CONSULTANT

Hassell LTD ABN 24 007 711 435
Level2, Pier 8/9,23 Hickson Rd
Sydney NSW 2000 Australia
T +61 2 9101 2000
F +61 2 9101 2100
sydney@hassellstudio.com
Nominated Architects NSW:
Tony Grist 5350
Glenn Scott 6842
Ross de la Motte 7398

REFERENCE

NORTH

NOTES
1. Do not scale drawing. Written dimensions govern
2. All dimensions are in millimeters unless noted otherwise
3. All dimensions shall be verified on site before proceeding with the work. Hassell shall be notified in writing of any discrepancies.
4. This drawing must be read in conjunction with all relevant contracts, specifications and drawings

This drawing is an uncontrolled copy. Unless noted otherwise

© Copyright of this drawing is vested in Hassell Ltd.

REV	DESCRIPTION	DATE
C	TENDER ADDENDUM	18 10 2021
B	FOR TENDER	04 08 2021
A	FOR TENDER	16 08 2021

CLIENT
FRASERS PROPERTY AUSTRALIA

PROJECT
STAGE 1B STREETSCAPES
MIDTOWN IVANHOE, MACQUARIE PARK
SYDNEY, NSW 2113

STATUS
TENDER DOCUMENTATION

DRAWING TITLE
DRAWING INDEX

REVIEWED

APPROVED

DRAWING NO.
HSL_S1B_0002

SCALE @ A1

PROJECT NO.
012092

REV NO.
C

LEGEND

REFER TO 'SH_L-S1B-6001 MATERIALS & FINISHES SCHEDULE' FOR SPECIFICATIONS

SITE

DRAWING	DETAIL REF	CODE	SYMBOL	
-	-	-		IVANHOE ESTATE SITE BOUNDARY
-	-	-		STAGE 1 & 1A LOT BOUNDARY
-	-	-		IVANHOE ESTATE LOT BOUNDARIES
-	-	-		STAGE 1B EXTENT OF WORKS
-	-	-	RL 0.00	INDICATIVE RELATIVE LEVEL REFER TO CIVIL ENGINEERS DRAWINGS
-	-	-	TW 0.00 BW 0.00	INDICATIVE TOP OF WALL BOTTOM OF WALL LEVEL. REFER TO CIVIL ENGINEERS DRAWINGS
-	-	-	0.00	PROPOSED CONTOURS. REFER TO CIVIL ENGINEERS DRAWINGS

PL - SOFTWORKS

DRAWING	DETAIL REF	CODE	SYMBOL	
L-S1B_5402	03 04	PL02		PLANTING MIX 02 MAIN STREET
L-S1B_5402	03 04	PL03		PLANTING MIX 03 NEIGHBOURHOOD STREET
L-S1B_5402	02 03	PL09		PLANTING MIX 09 LYON PARK ROAD CAR PARK
L-S1B_5402	01 05	PL10		PLANTING MIX 10 SHRIMPTONS CREEK

TREES

DRAWING	DETAIL REF	CODE	SYMBOL	DESCRIPTION
L-S1B_5401	01 02	-		PROPOSED TREE 750LTR
L-S1B_5401	01 03	-		PROPOSED TREE 400LTR
L-S1B_5401	01	-		PROPOSED PALM TREE

WA - WALLS

DRAWING	DETAIL REF	CODE	SYMBOL	DESCRIPTION
-	-	WA01		GABION RETAINING WALL LOCATION: SHRIMPTONS CREEK REFER ENGINEERS DETAILS
L-S1B_5102	04	WA02		CONCRETE RETAINING WALL LOCATION: LGS CAR PARK REFER ENGINEER DETAILS

FN - FURNITURE

DRAWING	DETAIL REF	CODE	SYMBOL	
L-S1B_5201	01 02 04	FN01		SINGLE SEAT 'PRECINCT SEAT' LOCATION: PUBLIC DOMAIN
L-S1B_5201	01 03	FN02		BENCH WITH BACKREST 'PRECINCT SEAT' LOCATION: PUBLIC DOMAIN
L-S1B_5201	01 03	FN04		BENCH WITH BACKREST 'PRECINCT SEAT' LOCATION: PUBLIC DOMAIN
L-S1B_5201	05	FN05		LINEAR STONE EDGING LOCATION: MAIN & NEIGHBOURHOOD STREETS
L-S1B_5203	01	FE02		VERTICAL PALISADE FENCE/ SCREEN LOCATION: LGS CARPARK

FI - FIXTURES

DRAWING	DETAIL REF	CODE	SYMBOL	
L-S1B_5202	01 02	FI01		CAST ALUMINIUM TREE SURROUNDS LOCATION: PUBLIC DOMAIN
L-S1B_5201	05	FI02 A		80L BIN - GENERAL WASTE LOCATION: PUBLIC DOMAIN
L-S1B_5201	05	FI02 B		80L BIN - RECYCLING' LOCATION: PUBLIC DOMAIN
L-S1B_5202	03	FI04		ETCHED GAME
L-S1B_5202	05	FI05		ETCHED GAME
L-S1B_5202	05	FI06		ETCHED GAME
-	-	FI07		NATIVE BIRD NESTING BOX LOCATION: STREETSCAPES

PV - HARDWORKS

DRAWING	DETAIL REF	CODE	SYMBOL	
L-S1B_5301	01	PV01		GRANITE PAVING LOCATION: FOOTPATH - MAIN STREET
L-S1B_5301 L-S1B_5302	02 01	PV02		GRANITE PAVING LOCATION: NEIGHBOURHOOD STREETS
L-S1B_5301	01 02	PV03		GRANITE PAVER - HEADER LOCATION: MAIN & NEIGHBOURHOOD STREETS
L-S1B_5301	03	PV04		GRANITE PAVING - SQUARE LOCATION: MAIN & NEIGHBOURHOOD STREETS
L-S1B_5301	06	PV05		GRANITE PAVING - PARKING BAYS LOCATION: MAIN & NEIGHBOURHOOD STREETS (TRAFFICABLE)
L-S1B_5302	06	PV07		CONCRETE FOOTPATH LOCATION: SHRIMPTONS CREEK

LI - LIGHTING

DRAWING	DETAIL REF	CODE	SYMBOL	
-	-			POLE TOP STREET LIGHTING COLOUR: BLACK RAL 9004 REFER ELECTRICAL ENGINEER DOCUMENTATION FOR SPECIFICATION

DRAWING NOTES

1. INFORMATION, OTHER THAN LANDSCAPE ARCHITECTURAL WORKS, HAS BEEN PROVIDED BY VARIOUS CONSULTANTS AND IS INCLUDED FOR INFORMATION ONLY.
2. FINAL COORDINATION OF ALL TREES, LIGHT POLES AND STREET FURNITURE LOCATIONS TO BE CONFIRMED POST TENDER FOLLOWING TRAFFIC SAFETY AUDIT
3. FINAL COORDINATION OF ALL TREES AND LOCATION OF PITS AND SERVICES TO BE CONFIRMED POST TENDER
4. PLANTING SCHEDULES ARE INDICATIVE ONLY AND SUBJECT TO REFINEMENT POST AWARD OF TENDER
5. ALL SITE LEVELS TO ADWJ DOCUMENTATION

CONSULTANT

Hassell LTD ABN 24 007 711 435
Level2, Pier 8/9,23 Hickson Rd
Sydney NSW 2000 Australia
T +61 2 9101 2000
F +61 2 9101 2100
sydney@hassellstudio.com
Nominated Architects NSW:
Tony Grist 5350
Glenn Scott 6842
Ross de la Motte 7398

REFERENCE

NORTH

NOTES
1. Do not scale drawing. Written dimensions govern
2. All dimensions are in millimeters unless noted otherwise
3. All dimensions shall be verified on site before proceeding with the work. Hassell shall be notified in writing of any discrepancies.
4. This drawing must be read in conjunction with all relevant contracts, specifications and drawings

This drawing is an uncontrolled copy. Unless noted otherwise

© Copyright of this drawing is vested in Hassell Ltd.

REV	DESCRIPTION	DATE
A	FOR TENDER	16 08 2021

CLIENT
FRASERS PROPERTY AUSTRALIA

PROJECT
STAGE 1B STREETSCAPES
MIDTOWN IVANHOE, MACQUARIE PARK
SYDNEY, NSW 2113

STATUS
TENDER DOCUMENTATION

DRAWING TITLE
DRAWING LEGEND

REVIEWED

APPROVED

DRAWING NO.
HSL_S1B_0003

SCALE @ A1

PROJECT NO.
012092

REV NO.
A

PLANTING SCHEDULE - STAGE 1B PUBLIC DOMAIN

CODE	BOTANIC NAME	COMMON NAME	POT SIZE	MIX %	QUANTITY
TREES					
Er	Elaeocarpus reticulatus 'Prima Donna'	Blueberry Ash	400ltr	-	37
Fm	Ficus microcarpa var. hilli 'Flash'	Hills Fig	750ltr	-	48
Hf	Howea forsteriana	Kentia Palm	Ex ground/ 12m(h)	-	4
			Ex ground/ 11m(h)		4
			Ex ground/ 9m(h)		4
Cf	Cercis canadensis 'Forest Pansy'	Eastern Redbud	400ltr	-	6
Wf	Waterhousia floribunda 'Amaroo'	Weeping Lily Pilly	400ltr	-	43
GROUNDCOVER MIXES					
PL 02	MAIN STREET (1221m²)				
	Lomandra hystrix 'Katie Belles'	Spiny Head Mat Rush	200mm	25	952
	Pennisetum alopecuroidea 'Nafray'	Swamp Foxtail Grass	200mm	25	952
	Liriope spicata	Lilyturf	150mm	20	1714
	Myoporum parvifolium	Creeping Boobialla	150mm	10	857
	Ophiopogon japonicus	Dwarf Turf Lily	150mm	20	2285
PL 03	NEIGHBOURHOOD STREET (594m²)				
	Lomandra longifolia 'Verday'	Spiny Head Mat Rush	200mm	25	585
	Tulbaghia violacea	Pink Agapanthis	200mm	25	585
	Liriope muscari 'Amethyst'	Lilyturf	150mm	20	1053
	Pratia pedunculata	Pratia	150mm	20	1872
	Trachelospermum asiaticum 'Flat Mat'	Chinese Star Jasmine	150mm	10	527
PL 09	LYON PARK ROAD CAR PARK (564m2)				
	Billardiera scandens	Apple Berry	200mm	15	338
	Centella asiatica	Swamp Pennywort	150mm	10	226
	Dianella caerulea 'Cassa Blue'	Native Flax Plant	200mm	15	338
	Goodenia hederacea	Violet-leaved Goodenia	150mm	10	226
	Hardenbergia violacea	False Saraparilla	200mm	15	338
	Helmholtzia glaberrima	Stream Lily	200mm	15	338
	Liriope muscari	Lily Turf	150mm	10	226
	Wahlenbergia gracilis	Australian Bluebell	150mm	10	226
PL 10	SHRIMPTONS CREEK (1039m2)				
	Callistemon hybrid 'Calkwr'	Bottlebrush	200mm	2	57
	Crowea exalta	Waxflower	200mm	8	228
	Dianella caerulea 'Casssa Blue'	Native Flax Lily	200mm	8	228
	Lamberta formosa	Mountain Devil	200mm	2	57
	Leptospermum 'Vertical Drop'	Tea tree	200mm	8	228
	Liriope muscari 'Amethyst'	Lily Turf	200mm	8	228
	Lomandra confertifolia 'Wingarra'	Mat Rush	200mm	8	228
	Lomandra confertifolia 'Katrinus'	Mat Rush	200mm	8	228
	Melaleuca 'Little Red'	Honey Myrtle	200mm	8	228
	Ozmanthus diosmifolius	Rice Flower	200mm	2	57
	Platysace lanceolata	Edna Walling Flower Girl	200mm	8	228
	Pennisetum alopecuroides 'Nafray'	Swamp Grass	200mm	8	228
	Poa labillardierei	Tussock Grass	200mm	8	228
	Russelia equisetiformis	Firecracker Plant	200mm	2	57
	Sarcococca confusa	Sweet Box	200mm	2	57
	Scaevola humilis 'Purple Fusion'	Fan Flower	200mm	8	57

C PLANT QUANTITIES REDUCED

C PLANT QUANTITIES REDUCED

CONSULTANT

Hassell LTD ABN 24 007 711 435
Level2, Pier 8/9,23 Hickson Rd
Sydney NSW 2000 Australia
T +61 2 9101 2000
F +61 2 9101 2100
sydney@hassellstudio.com
Nominated Architects NSW:
Tony Grist 5350
Glenn Scott 6842
Ross de la Motte 7398

REFERENCE

NORTH

NOTES

1. Do not scale drawing. Written dimensions govern
2. All dimensions are in millimeters unless noted otherwise
3. All dimensions shall be verified on site before proceeding with the work. Hassell shall be notified in writing of any discrepancies.
4. This drawing must be read in conjunction with all relevant contracts, specifications and drawings

This drawing is an uncontrolled copy. Unless noted otherwise

© Copyright of this drawing is vested in Hassell Ltd.

REV	DESCRIPTION	DATE
C	TENDER ADDENDUM	18 10 2021
B	FOR TENDER	24 08 2021
A	FOR TENDER	16 08 2021

CLIENT
FRASERS PROPERTY AUSTRALIA

PROJECT
STAGE 1B STREETSCAPES
MIDTOWN IVANHOE, MACQUARIE PARK
SYDNEY, NSW 2113

STATUS
TENDER DOCUMENTATION

DRAWING TITLE
PLANTING SCHEDULE

REVIEWED

APPROVED

DRAWING NO.
HSL_S1B_0004

SCALE @ A1

PROJECT NO.
012092

REV NO.
C

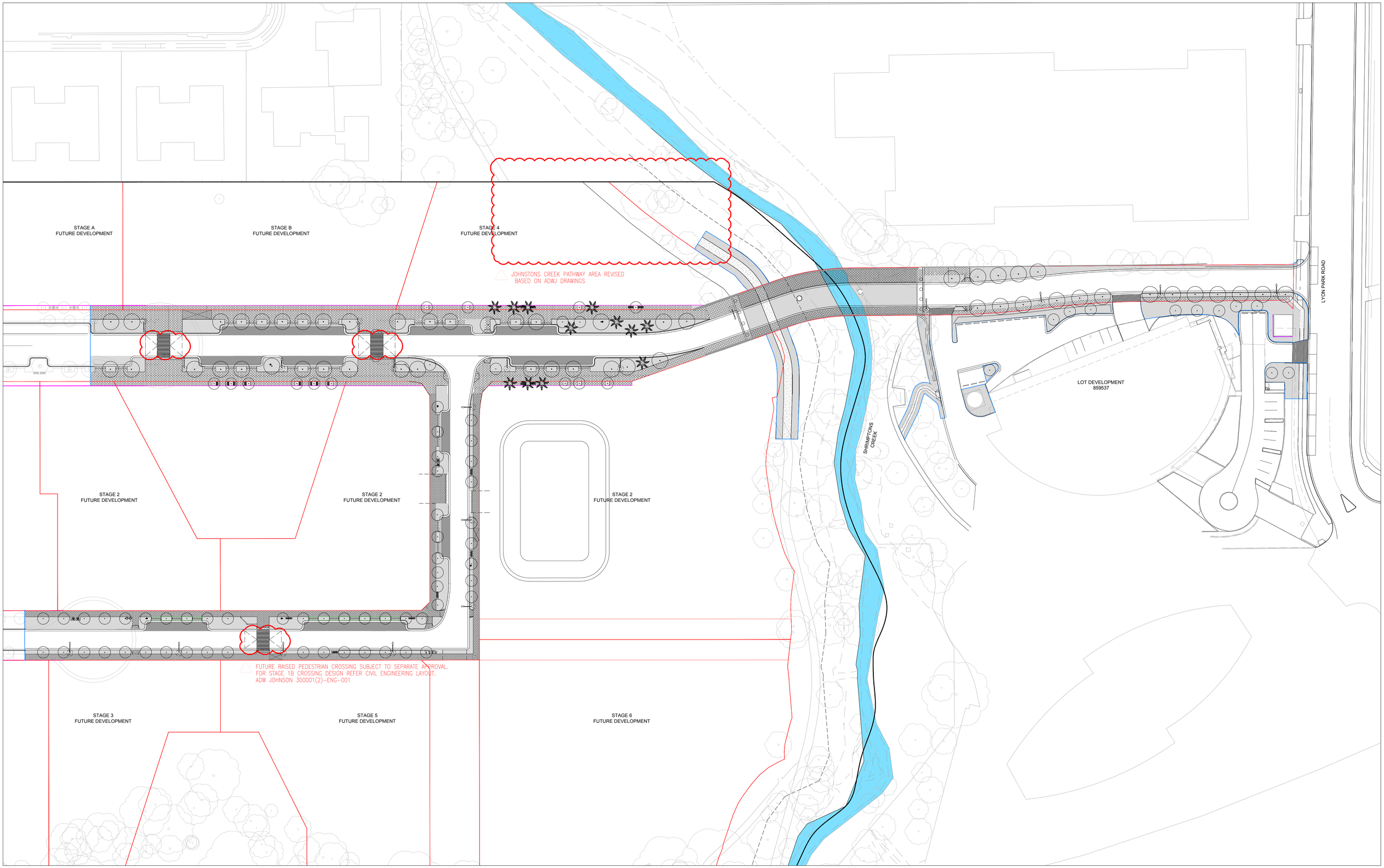

CONSULTANT

Hassell LTD ABN 24 007 711 435
Level2, Pier 8/9,23 Hickson Rd
Sydney NSW 2000 Australia
T +61 2 9101 2000
F +61 2 9101 2100
sydney@hassellstudio.com
Nominated Architects NSW:
Tony Grist 5350
Glenn Scott 6842
Ross de la Motte 7398

REFERENCE

NORTH

NOTES

1. Do not scale drawing. Written dimensions govern
2. All dimensions are in millimeters unless noted otherwise
3. All dimensions shall be verified on site before proceeding with the work. Hassell shall be notified in writing of any discrepancies.
4. This drawing must be read in conjunction with all relevant contracts, specifications and drawings

This drawing is an uncontrolled copy. Unless noted otherwise

© Copyright of this drawing is vested in Hassell Ltd.

REV	DESCRIPTION	DATE
C	TENDER ADDENDUM	18 10 2021
B	FOR TENDER	24 08 2021
A	FOR TENDER	16 08 2021

CLIENT
FRASERS PROPERTY AUSTRALIA

PROJECT
STAGE 1B STREETSCAPES
MIDTOWN IVANHOE, MACQUARIE PARK
SYDNEY, NSW 2113

STATUS
TENDER DOCUMENTATION

DRAWING TITLE
SITE PLAN

REVIEWED

APPROVED

DRAWING NO.
HSL_S1B_0100

SCALE @ A1

PROJECT NO.
012092

REV NO.
C

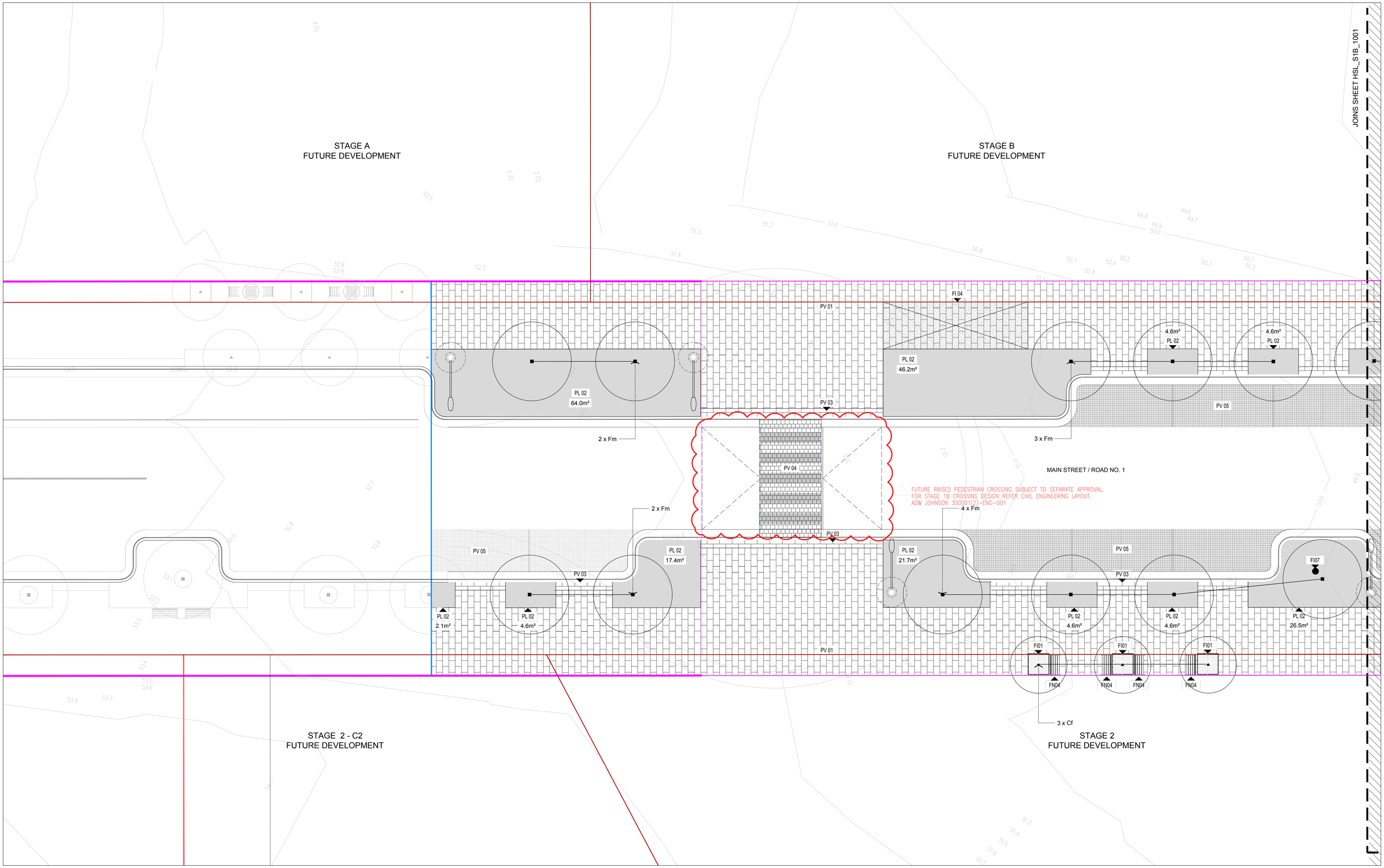

CONSULTANT

Hassell LTD ABN 24 007 711 435
Level2, Pier 8/9,23 Hickson Rd
Sydney NSW 2000 Australia
T +61 2 9101 2000
F +61 2 9101 2100
sydney@hasselstudio.com
Nominated Architects NSW:
Tony Grist 5350
Glenn Scott 6842
Ross de la Motte 7398

REFERENCE

NORTH

NOTES

1. Do not scale drawing. Written dimensions govern
2. All dimensions are in millimeters unless noted otherwise
3. All dimensions shall be verified on site before proceeding with the work. Hassell shall be notified in writing of any discrepancies.
4. This drawing must be read in conjunction with all relevant contracts, specifications and drawings

This drawing is an uncontrolled copy. Unless noted otherwise

© Copyright of this drawing is vested in Hassell Ltd.

REV	DESCRIPTION	DATE
A	FOR TENDER	16 08 2021

CLIENT
FRASERS PROPERTY AUSTRALIA

PROJECT
STAGE 1B STREETSCAPES
MIDTOWN IVANHOE, MACQUARIE PARK
SYDNEY, NSW 2113

STATUS
TENDER DOCUMENTATION

DRAWING TITLE
GENERAL ARRANGEMENT

REVIEWED

APPROVED

DRAWING NO.
HSL_S1B_1001

SCALE @ A1

PROJECT NO.
012092

REV NO.
A

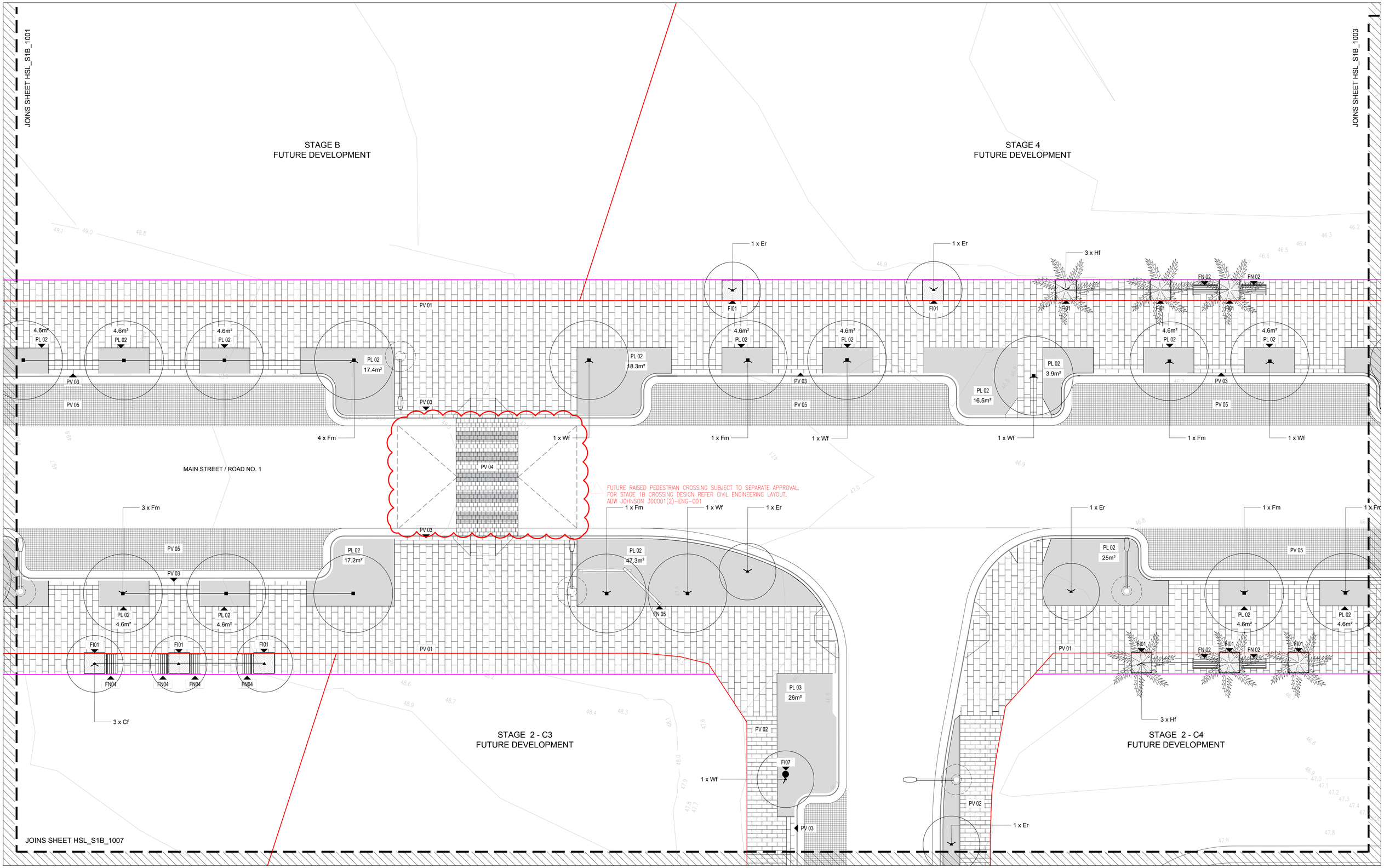

CONSULTANT

Hassell LTD ABN 24 007 711 435
Level2, Pier 8/9,23 Hickson Rd
Sydney NSW 2000 Australia
T +61 2 9101 2000
F +61 2 9101 2100
sydney@hassellstudio.com
Nominated Architects NSW:
Tony Grist 5350
Glenn Scott 6842
Ross de la Motte 7398

REFERENCE

NORTH

NOTES

1. Do not scale drawing. Written dimensions govern
2. All dimensions are in millimeters unless noted otherwise
3. All dimensions shall be verified on site before proceeding with the work. Hassell shall be notified in writing of any discrepancies.
4. This drawing must be read in conjunction with all relevant contracts, specifications and drawings

This drawing is an uncontrolled copy. Unless noted otherwise

© Copyright of this drawing is vested in Hassell Ltd.

REV	DESCRIPTION	DATE
A	FOR TENDER	16 08 2021

CLIENT
FRASERS PROPERTY AUSTRALIA

PROJECT
STAGE 1B STREETSCAPES
MIDTOWN IVANHOE, MACQUARIE PARK
SYDNEY, NSW 2113

STATUS
TENDER DOCUMENTATION

DRAWING TITLE
GENERAL ARRANGEMENT

REVIEWED

APPROVED

DRAWING NO.
HSL_S1B_1002

SCALE @ A1

PROJECT NO.
012092

REV NO.
A

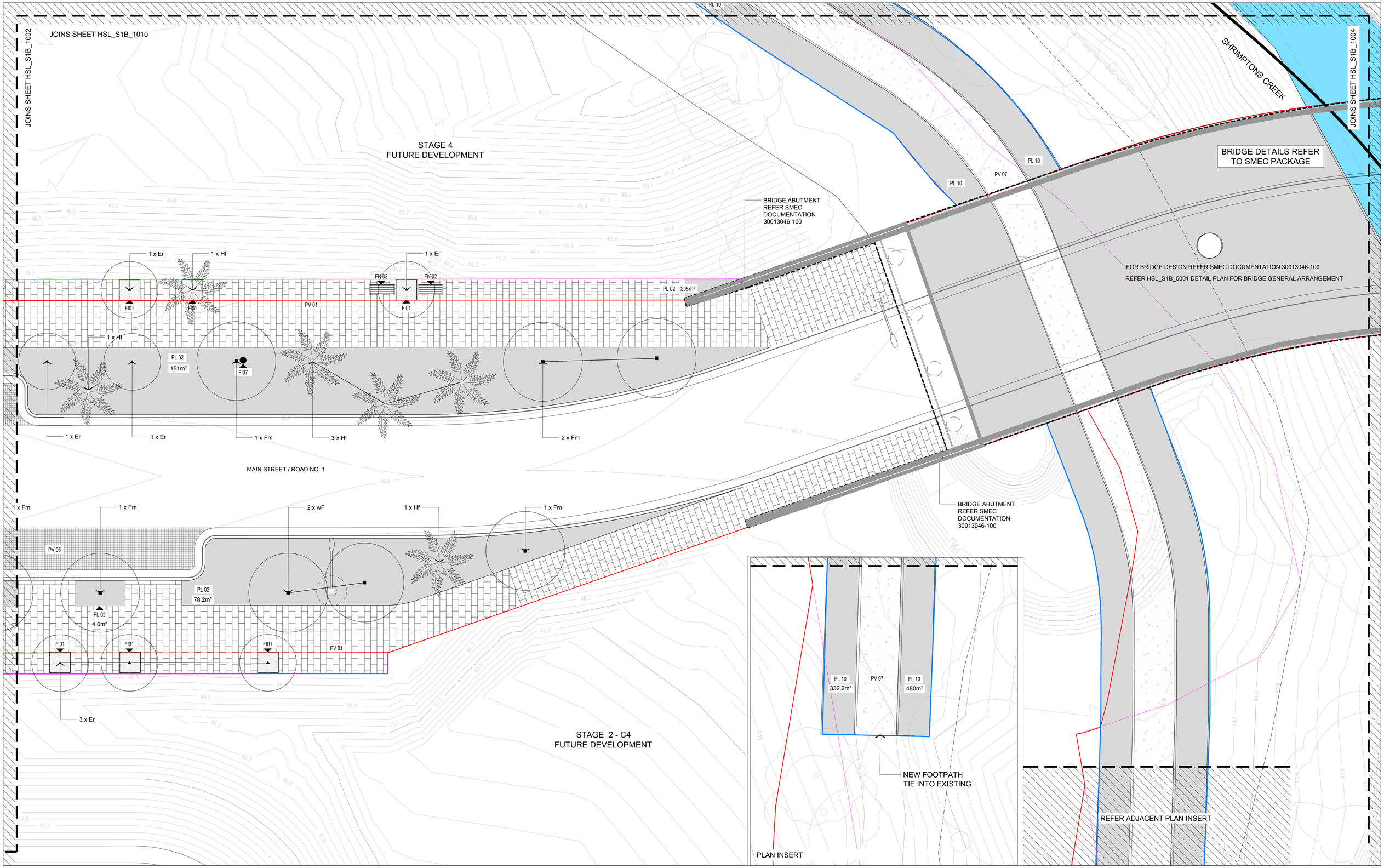

CONSULTANT

Hassell LTD ABN 24 007 711 435
Level2, Pier 8/9,23 Hickson Rd
Sydney NSW 2000 Australia
T +61 2 9101 2000
F +61 2 9101 2100
sydney@hassellstudio.com
Nominated Architects NSW:
Tony Grist 5350
Glenn Scott 6842
Ross de la Motte 7398

REFERENCE

NORTH

NOTES

1. Do not scale drawing. Written dimensions govern
2. All dimensions are in millimeters unless noted otherwise
3. All dimensions shall be verified on site before proceeding with the work. Hassell shall be notified in writing of any discrepancies.
4. This drawing must be read in conjunction with all relevant contracts, specifications and drawings

This drawing is an uncontrolled copy. Unless noted otherwise

© Copyright of this drawing is vested in Hassell Ltd.

REV	DESCRIPTION	DATE
B	TENDER ADDENDUM	18 10 2021
A	FOR TENDER	16 08 2021

CLIENT
FRASERS PROPERTY AUSTRALIA

PROJECT
STAGE 1B STREETSCAPES
MIDTOWN IVANHOE, MACQUARIE PARK
SYDNEY, NSW 2113

STATUS
TENDER DOCUMENTATION

DRAWING TITLE
GENERAL ARRANGEMENT

REVIEWED

APPROVED

DRAWING NO.
HSL_S1B_1003

SCALE @ A1

PROJECT NO.
012092

REV NO.
B

PRINT INFORMATION_ PRINTED BY: Chloe Walsh _ ON: 2021/10/18 _ USING PAGESETUP: --- _ USING PLOTSTYLE TABLE: halfweight.ctb _ PC3: DWG To PDF.pc3 _ PSLTSCALE: 1 _ LTSCALE: 1.000000

FILENAME \\syd-p-fs-06\fs045\012092-61a-p\Working\AutoCAD\10_td_stage01b\Sheet\HSL_S1B_1003 GENERAL ARRANGEMENT.dwg

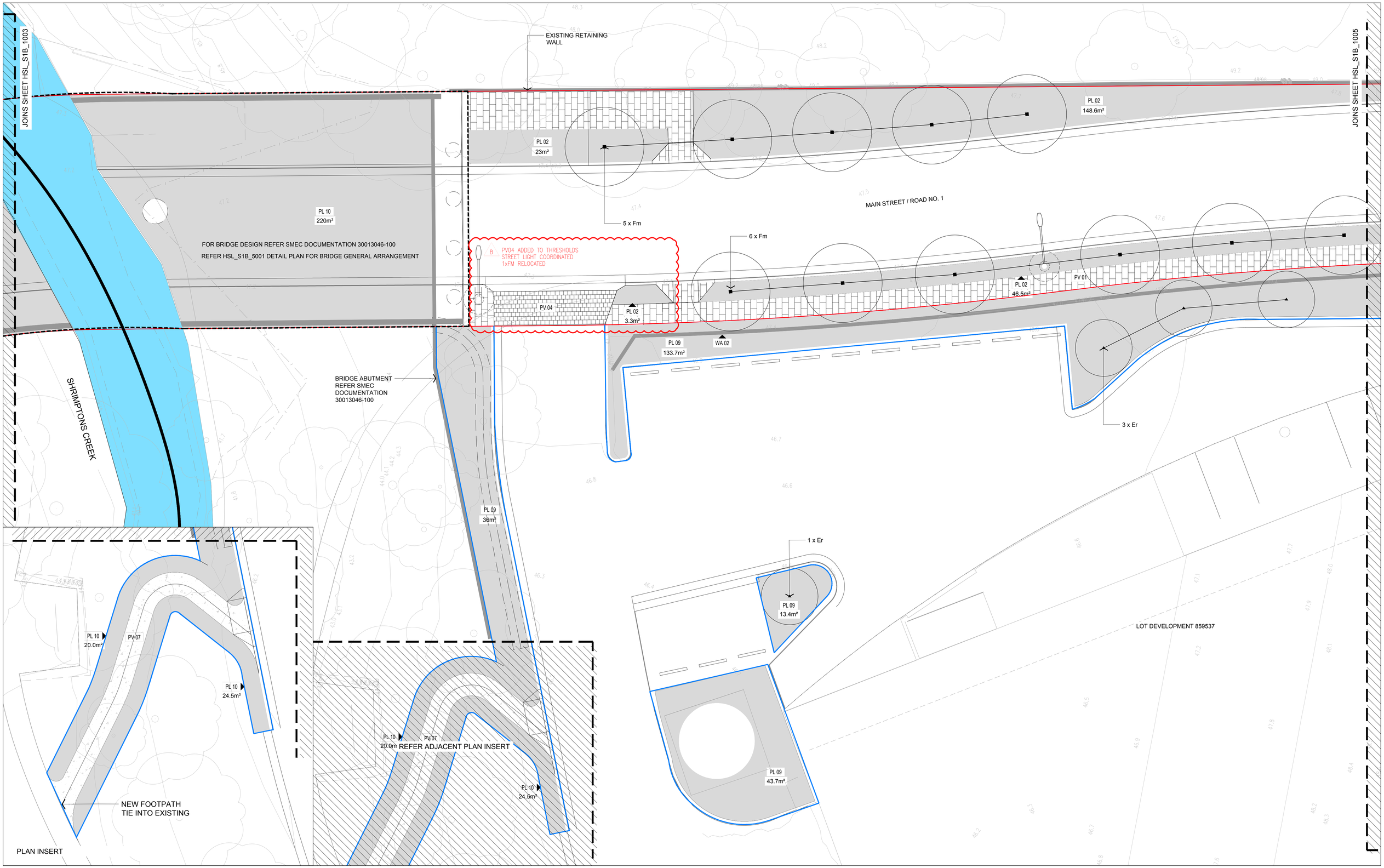

CONSULTANT

Hassell LTD ABN 24 007 711 435
Level2, Pier 8/9,23 Hickson Rd
Sydney NSW 2000 Australia
T +61 2 9101 2000
F +61 2 9101 2100
sydney@hassellstudio.com
Nominated Architects NSW:
Tony Grist 5350
Glenn Scott 6842
Ross de la Motte 7398

REFERENCE

NORTH

NOTES

1. Do not scale drawing. Written dimensions govern
2. All dimensions are in millimeters unless noted otherwise
3. All dimensions shall be verified on site before proceeding with the work. Hassell shall be notified in writing of any discrepancies.
4. This drawing must be read in conjunction with all relevant contracts, specifications and drawings

This drawing is an uncontrolled copy. Unless noted otherwise

© Copyright of this drawing is vested in Hassell Ltd.

REV	DESCRIPTION	DATE
B	FOR TENDER	24 08 2024
A	FOR TENDER	16 08 2021

CLIENT
FRASERS PROPERTY AUSTRALIA

PROJECT
STAGE 1B STREETSCAPES
MIDTOWN IVANHOE, MACQUARIE PARK
SYDNEY, NSW 2113

STATUS
TENDER DOCUMENTATION

DRAWING TITLE
GENERAL ARRANGEMENT

REVIEWED

APPROVED

SCALE @ A1

PROJECT NO.
012092

DRAWING NO.
HSL_S1B_1004

REV NO.
B

PRINT INFORMATION_ PRINTED BY: Georgia Darling _ ON: 2021/08/24 _ USING PAGESETUP: ---- _ USING PLOTSTYLE TABLE: halfweight.ctb _ PC3: DWG To PDF.pc3 _ PSLTSCALE: 1 _ LTSCALE: 1.000000

FILENAME \\aydproj\fs03\012092-61A-PI\Working\AutoCAD\10_TD_Stage01B\Sheet\HSL_S1B_1004 GENERAL ARRANGEMENT.dwg

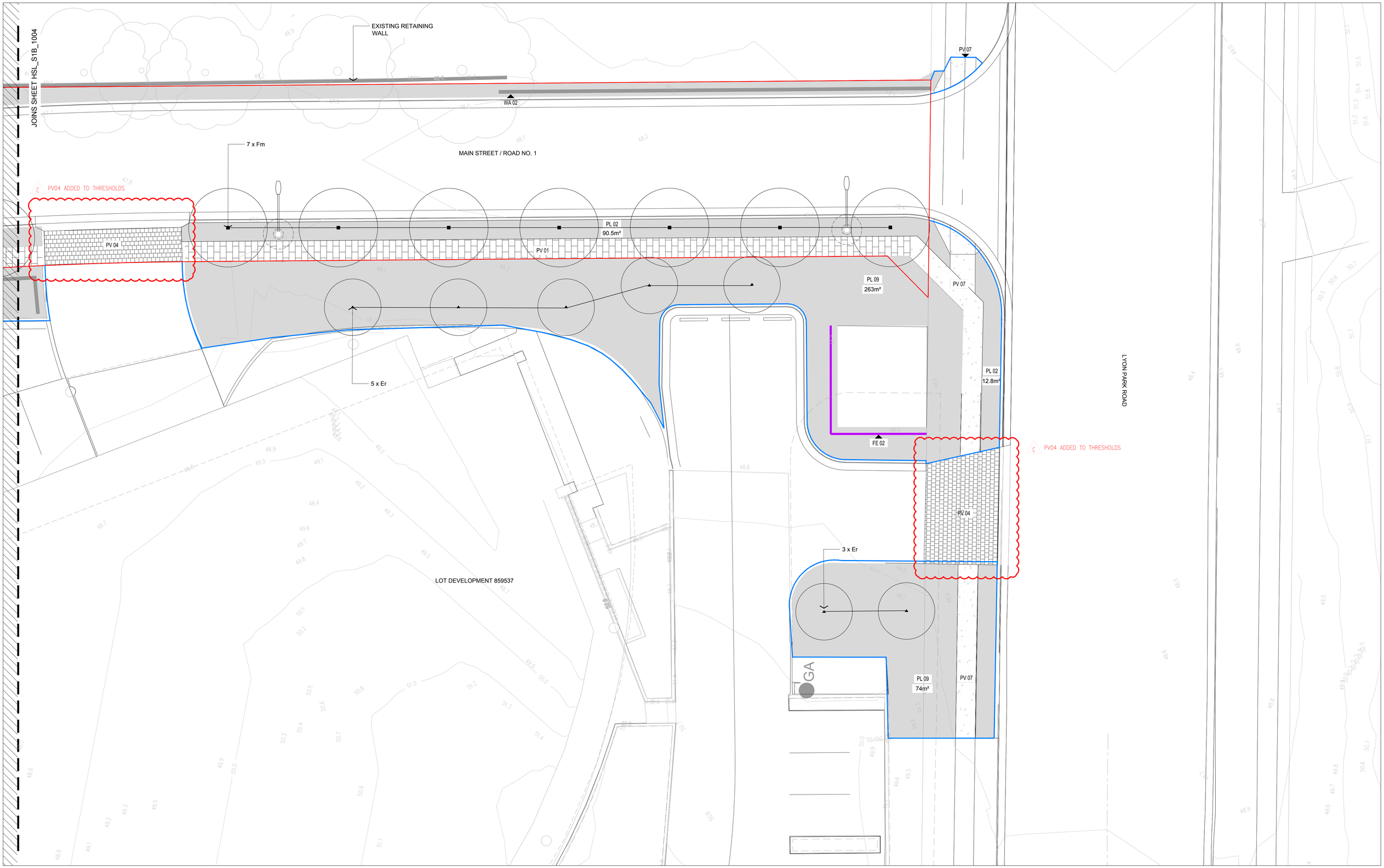

CONSULTANT

Hassell LTD ABN 24 007 711 435
Level2, Pier 8/9,23 Hickson Rd
Sydney NSW 2000 Australia
T +61 2 9101 2000
F +61 2 9101 2100
sydney@hassellstudio.com
Nominated Architects NSW:
Tony Grist 5350
Glenn Scott 6842
Ross de la Motte 7398

REFERENCE

NORTH

NOTES

1. Do not scale drawing. Written dimensions govern
2. All dimensions are in millimeters unless noted otherwise
3. All dimensions shall be verified on site before proceeding with the work. Hassell shall be notified in writing of any discrepancies.
4. This drawing must be read in conjunction with all relevant contracts, specifications and drawings

This drawing is an uncontrolled copy. Unless noted otherwise

© Copyright of this drawing is vested in Hassell Ltd.

REV	DESCRIPTION	DATE
C	FOR TENDER	24 08 2021
B	FOR TENDER	17 08 2021
A	FOR TENDER	16 08 2021

CLIENT
FRASERS PROPERTY AUSTRALIA

PROJECT
STAGE 1B STREETSCAPES
MIDTOWN IVANHOE, MACQUARIE PARK
SYDNEY, NSW 2113

STATUS
TENDER DOCUMENTATION

DRAWING TITLE
GENERAL ARRANGEMENT

REVIEWED

APPROVED

DRAWING NO.
HSL_S1B_1005

SCALE @ A1

PROJECT NO.
012092

REV NO.
C

PRINT INFORMATION_ PRINTED BY: Georgia Darling _ ON: 2021/08/24 _ USING PAGESETUP: ---- _ USING PLOTSTYLE TABLE: halfweight.ctb _ PC3: DWG To PDF.pc3 _ PSLTSCALE: 1 _ LTSCALE: 1.000000

FILENAME \\sydproj\hs03\012092-61A-PI\Working\AutoCAD\10_TD_Stage01B\Sheet\HSL_S1B_1005 GENERAL ARRANGEMENT.dwg

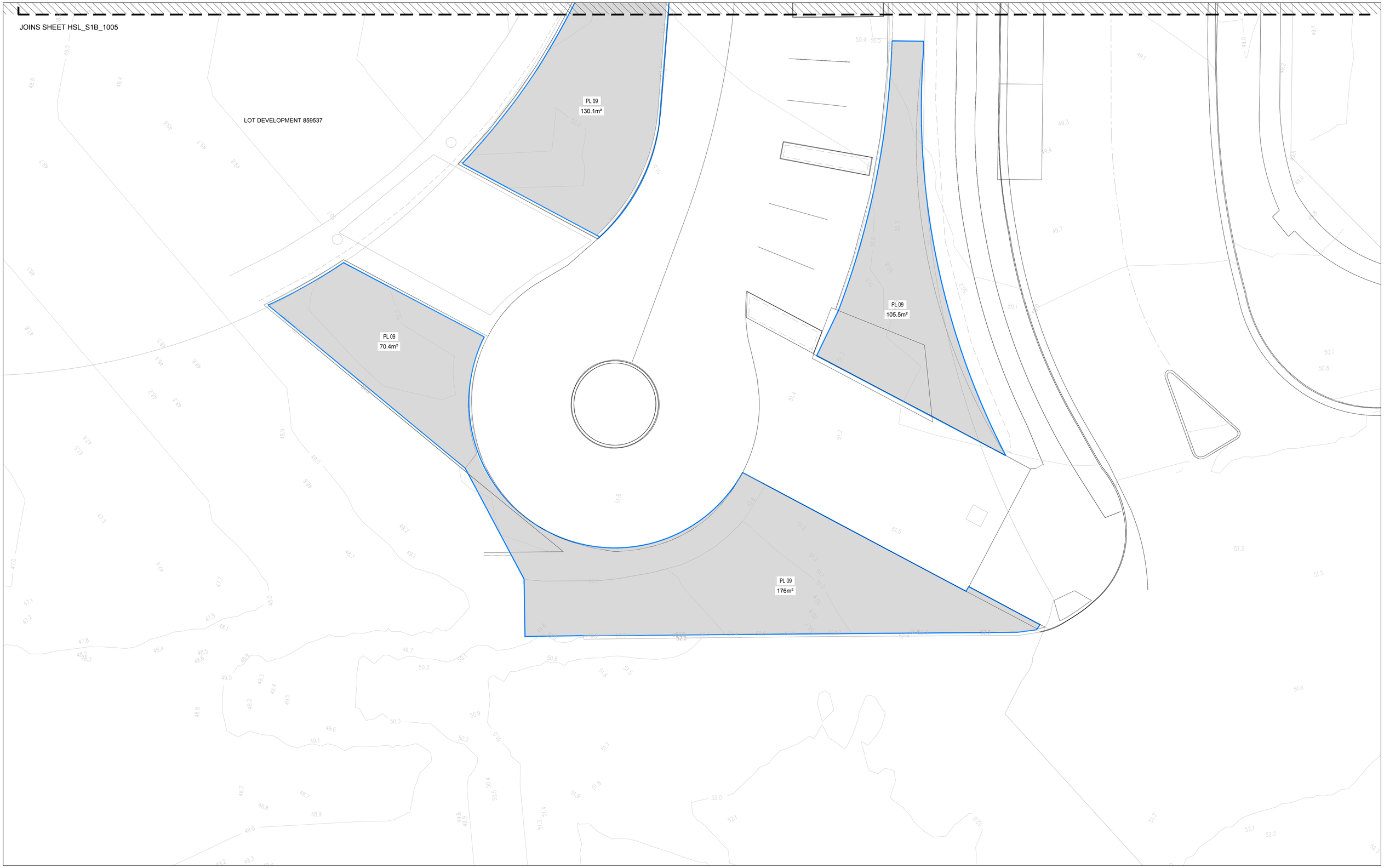

CONSULTANT

Hassell LTD ABN 24 007 711 435
Level2, Pier 8/9,23 Hickson Rd
Sydney NSW 2000 Australia
T +61 2 9101 2000
F +61 2 9101 2100
sydney@hassellstudio.com
Nominated Architects NSW:
Tony Grist 5350
Glenn Scott 6842
Ross de la Motte 7398

REFERENCE

NORTH

NOTES

1. Do not scale drawing. Written dimensions govern
2. All dimensions are in millimeters unless noted otherwise
3. All dimensions shall be verified on site before proceeding with the work. Hassell shall be notified in writing of any discrepancies.
4. This drawing must be read in conjunction with all relevant contracts, specifications and drawings

This drawing is an uncontrolled copy. Unless noted otherwise

© Copyright of this drawing is vested in Hassell Ltd.

REV	DESCRIPTION	DATE
A	FOR TENDER	16 08 2021

CLIENT
FRASERS PROPERTY AUSTRALIA

PROJECT
STAGE 1B STREETSCAPES
MIDTOWN IVANHOE, MACQUARIE PARK
SYDNEY, NSW 2113

STATUS
TENDER DOCUMENTATION

DRAWING TITLE
GENERAL ARRANGEMENT

REVIEWED

APPROVED

DRAWING NO.
HSL_S1B_1006

SCALE @ A1

PROJECT NO.
012092

REV NO.
A

PRINT INFORMATION_ PRINTED BY: Georgia Darling _ ON: 2021/08/16 _ USING PAGESETUP: ---- _ USING PLOTSTYLE TABLE: halfweight.ctb _ PC3: DWG To PDF.pc3 _ PSLTSCALE: 1 _ LTSCALE: 1.000000

FILENAME \\aydproj\fs03\012092-61A-P\Working\AutoCAD\10_TD_Stage01B\Sheet\HSL_S1B_1006 GENERAL ARRANGEMENT.dwg

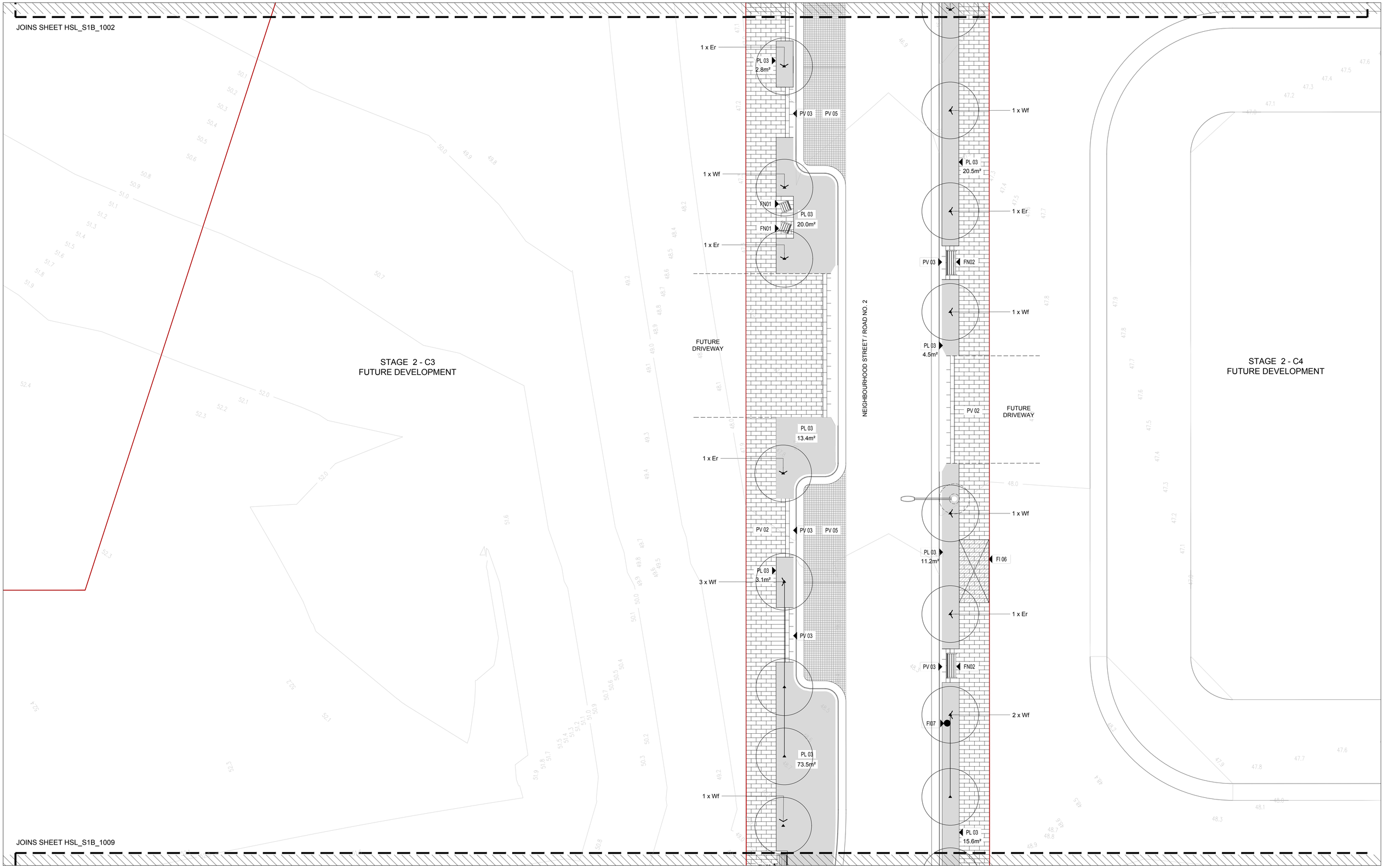

CONSULTANT

Hassell LTD ABN 24 007 711 435
Level2, Pier 8/9,23 Hickson Rd
Sydney NSW 2000 Australia
T +61 2 9101 2000
F +61 2 9101 2100
sydney@hassellstudio.com
Nominated Architects NSW:
Tony Grist 5350
Glenn Scott 6842
Ross de la Motte 7398

REFERENCE

NORTH

NOTES

1. Do not scale drawing. Written dimensions govern
2. All dimensions are in millimeters unless noted otherwise
3. All dimensions shall be verified on site before proceeding with the work. Hassell shall be notified in writing of any discrepancies.
4. This drawing must be read in conjunction with all relevant contracts, specifications and drawings

This drawing is an uncontrolled copy. Unless noted otherwise

© Copyright of this drawing is vested in Hassell Ltd.

REV	DESCRIPTION	DATE
A	FOR TENDER	16 08 2021

CLIENT
FRASERS PROPERTY AUSTRALIA

PROJECT
STAGE 1B STREETSCAPES
MIDTOWN IVANHOE, MACQUARIE PARK
SYDNEY, NSW 2113

STATUS
TENDER DOCUMENTATION

DRAWING TITLE
GENERAL ARRANGEMENT

REVIEWED

APPROVED

DRAWING NO.
HSL_S1B_1007

SCALE @ A1

PROJECT NO.
012092

REV NO.
A

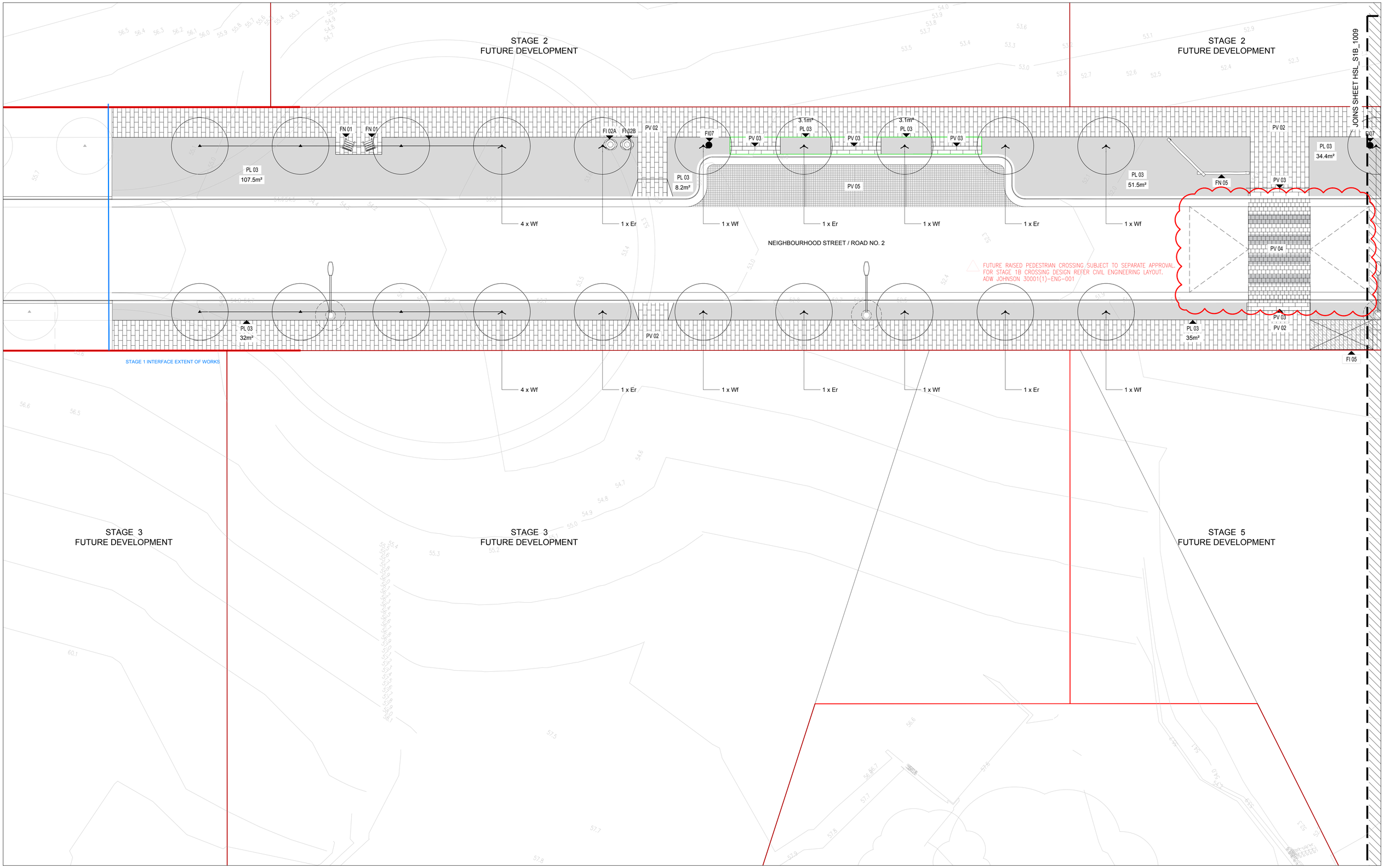

CONSULTANT

Hassell LTD ABN 24 007 711 435
Level2, Pier 8/9,23 Hickson Rd
Sydney NSW 2000 Australia
T +61 2 9101 2000
F +61 2 9101 2100
sydney@hassellstudio.com
Nominated Architects NSW:
Tony Grist 5350
Glenn Scott 6842
Ross de la Motte 7398

REFERENCE

NORTH

NOTES

1. Do not scale drawing. Written dimensions govern
2. All dimensions are in millimeters unless noted otherwise
3. All dimensions shall be verified on site before proceeding with the work. Hassell shall be notified in writing of any discrepancies.
4. This drawing must be read in conjunction with all relevant contracts, specifications and drawings

This drawing is an uncontrolled copy. Unless noted otherwise

© Copyright of this drawing is vested in Hassell Ltd.

REV	DESCRIPTION	DATE
A	FOR TENDER	16 08 2021

CLIENT
FRASERS PROPERTY AUSTRALIA

PROJECT
STAGE 1B STREETSCAPES
MIDTOWN IVANHOE, MACQUARIE PARK
SYDNEY, NSW 2113

STATUS
TENDER DOCUMENTATION

DRAWING TITLE
GENERAL ARRANGEMENT

REVIEWED

APPROVED

SCALE @ A1

PROJECT NO.
012092

DRAWING NO.
HSL_S1B_1008

REV NO.
A

PRINT INFORMATION_ PRINTED BY: Georgia Darling _ ON: 2021/08/16 _ USING PAGESETUP: ---- _ USING PLOTSTYLE TABLE: halfweight.ctb _ PC3: DWG To PDF.pc3 _ PSLTSCALE: 1 _ LTSCALE: 1.000000

FILENAME \\aydproj\fs03\012092-61A-P\Working\AutoCAD\10_TD_Stage01B\Sheet\HSL_S1B_1008 GENERAL ARRANGEMENT.dwg

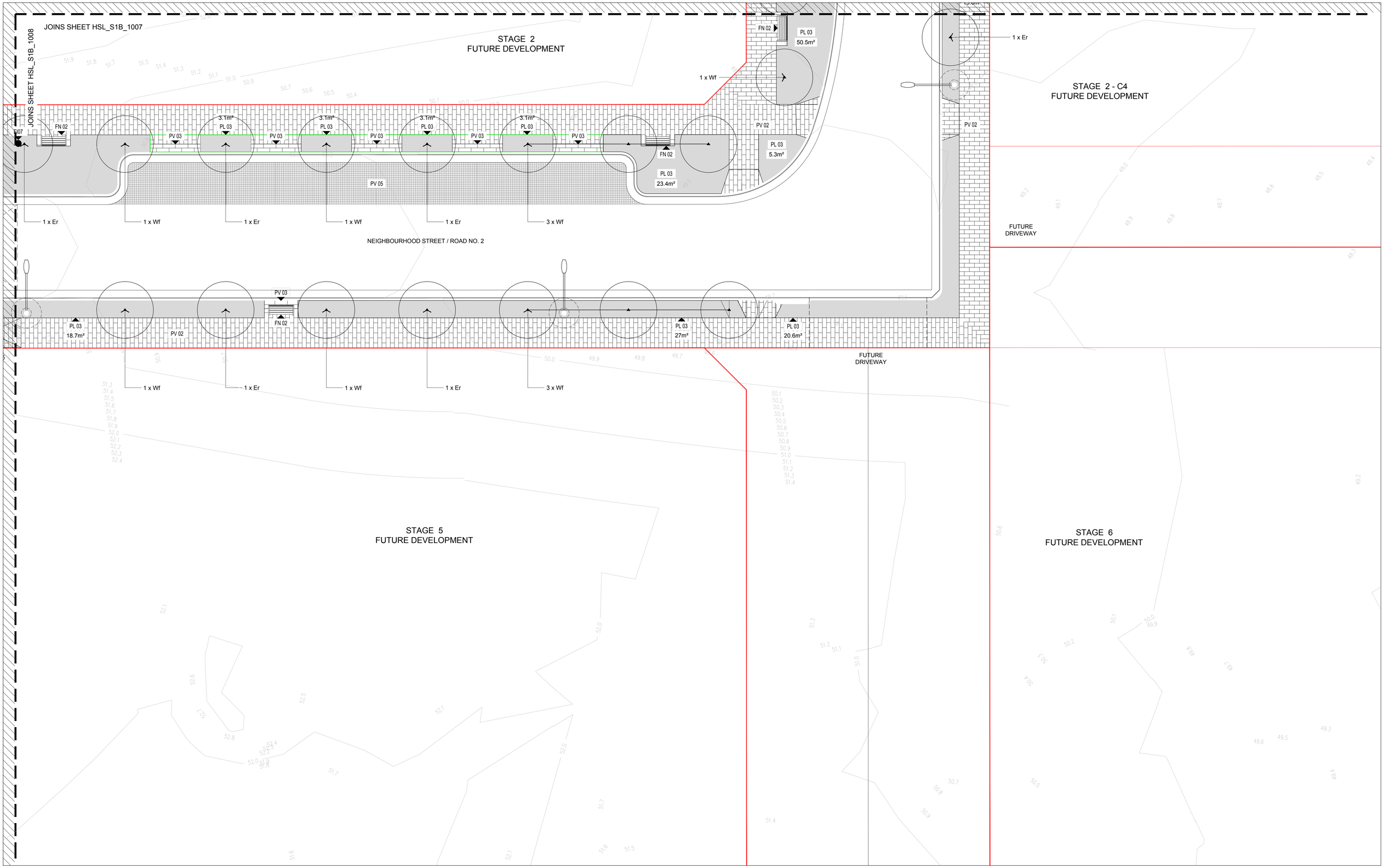

CONSULTANT

Hassell LTD ABN 24 007 711 435
Level2, Pier 8/9,23 Hickson Rd
Sydney NSW 2000 Australia
T +61 2 9101 2000
F +61 2 9101 2100
sydney@hassellstudio.com
Nominated Architects NSW:
Tony Grist 5350
Glenn Scott 6842
Ross de la Motte 7398

REFERENCE

NORTH

NOTES

1. Do not scale drawing. Written dimensions govern
2. All dimensions are in millimeters unless noted otherwise
3. All dimensions shall be verified on site before proceeding with the work. Hassell shall be notified in writing of any discrepancies.
4. This drawing must be read in conjunction with all relevant contracts, specifications and drawings

This drawing is an uncontrolled copy. Unless noted otherwise

© Copyright of this drawing is vested in Hassell Ltd.

REV	DESCRIPTION	DATE
A	FOR TENDER	16 08 2021

CLIENT
FRASERS PROPERTY AUSTRALIA

PROJECT
STAGE 1B STREETSCAPES
MIDTOWN IVANHOE, MACQUARIE PARK
SYDNEY, NSW 2113

STATUS
TENDER DOCUMENTATION

DRAWING TITLE
GENERAL ARRANGEMENT

REVIEWED

APPROVED

DRAWING NO.
HSL_S1B_1009

SCALE @ A1

PROJECT NO.
012092

REV NO.
A

PRINT INFORMATION_ PRINTED BY: Georgia Darling _ ON: 2021/08/16 _ USING PAGESETUP: ---- _ USING PLOTSTYLE TABLE: halfweight.ctb _ PC3: DWG To PDF.pc3 _ PSLTSCALE: 1 _ LTSCALE: 1.000000

FILENAME \\sydproj\fs03\012092-61A-P\Working\AutoCAD\10_TD_Stage01B\Sheet\HSL_S1B_1009 GENERAL ARRANGEMENT.dwg

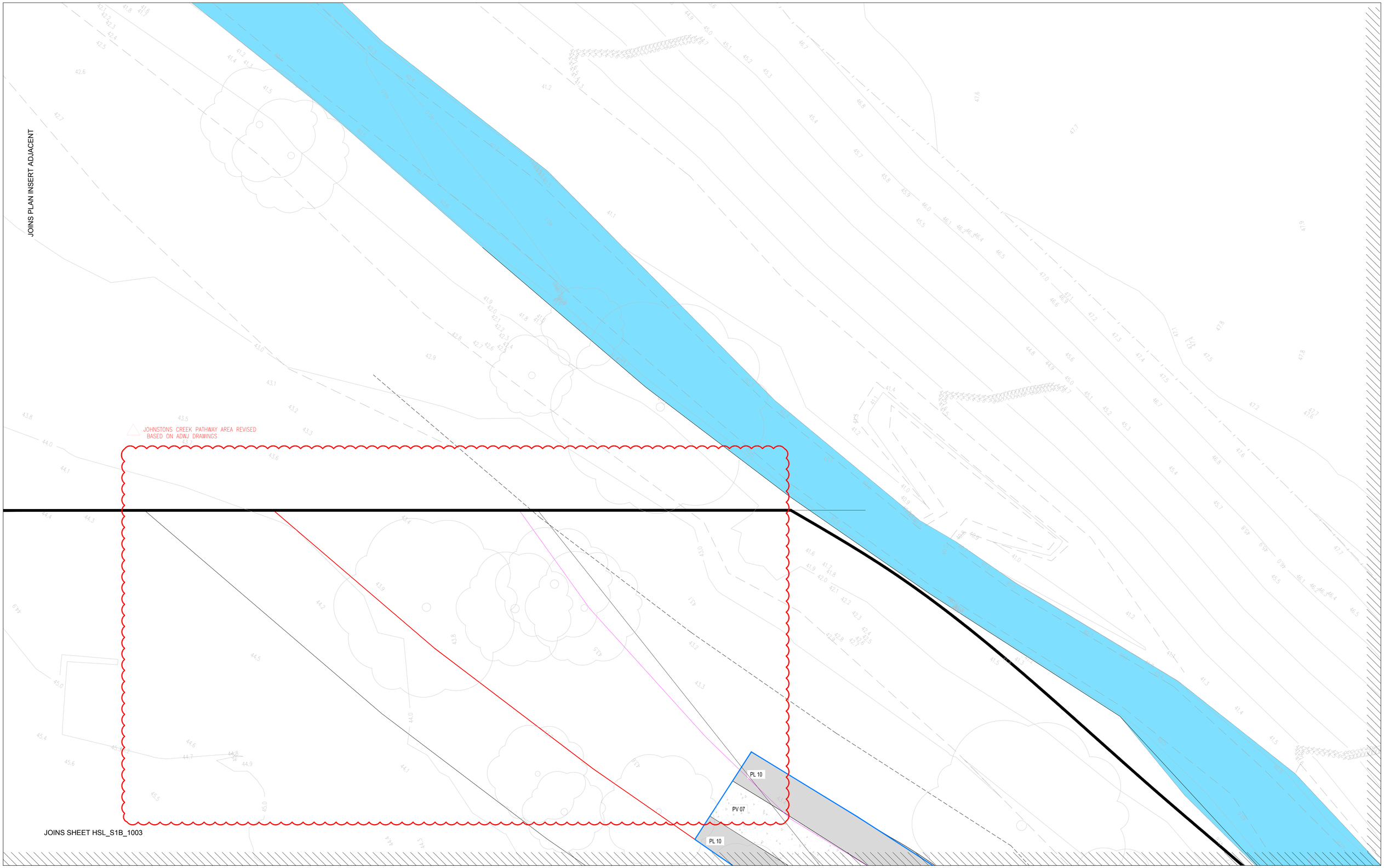

CONSULTANT

Hassell LTD ABN 24 007 711 435
Level2, Pier 8/9,23 Hickson Rd
Sydney NSW 2000 Australia
T +61 2 9101 2000
F +61 2 9101 2100
sydney@hassellstudio.com
Nominated Architects NSW:
Tony Grist 5350
Glenn Scott 6842
Ross de la Motte 7398

REFERENCE

NORTH

NOTES

1. Do not scale drawing. Written dimensions govern
2. All dimensions are in millimeters unless noted otherwise
3. All dimensions shall be verified on site before proceeding with the work. Hassell shall be notified in writing of any discrepancies.
4. This drawing must be read in conjunction with all relevant contracts, specifications and drawings

This drawing is an uncontrolled copy. Unless noted otherwise

© Copyright of this drawing is vested in Hassell Ltd.

REV	DESCRIPTION	DATE
B	TENDER ADDENDUM	18 10 2021
A	FOR TENDER	16 08 2021

CLIENT
FRASERS PROPERTY AUSTRALIA

PROJECT
STAGE 1B STREETSCAPES
MIDTOWN IVANHOE, MACQUARIE PARK
SYDNEY, NSW 2113

STATUS
TENDER DOCUMENTATION

DRAWING TITLE
GENERAL ARRANGEMENT

REVIEWED

APPROVED

DRAWING NO.
HSL_S1B_1010

SCALE @ A1

PROJECT NO.
012092

REV NO.
B

PRINT INFORMATION_ PRINTED BY: Chloe Walsh _ ON: 2021/10/18 _ USING PAGESETUP: --- _ USING PLOTSTYLE TABLE: halfweight.ctb _ PC3: DWG To PDF.pc3 _ PSLTSCALE: 1 _ LTSCALE: 1.000000

FILENAME \\syd-p-fs-06\fs045\012092-61a-p\Working\AutoCAD\10_td_stage01b\Sheet\HSL_S1B_1010 GENERAL ARRANGEMENT.dwg

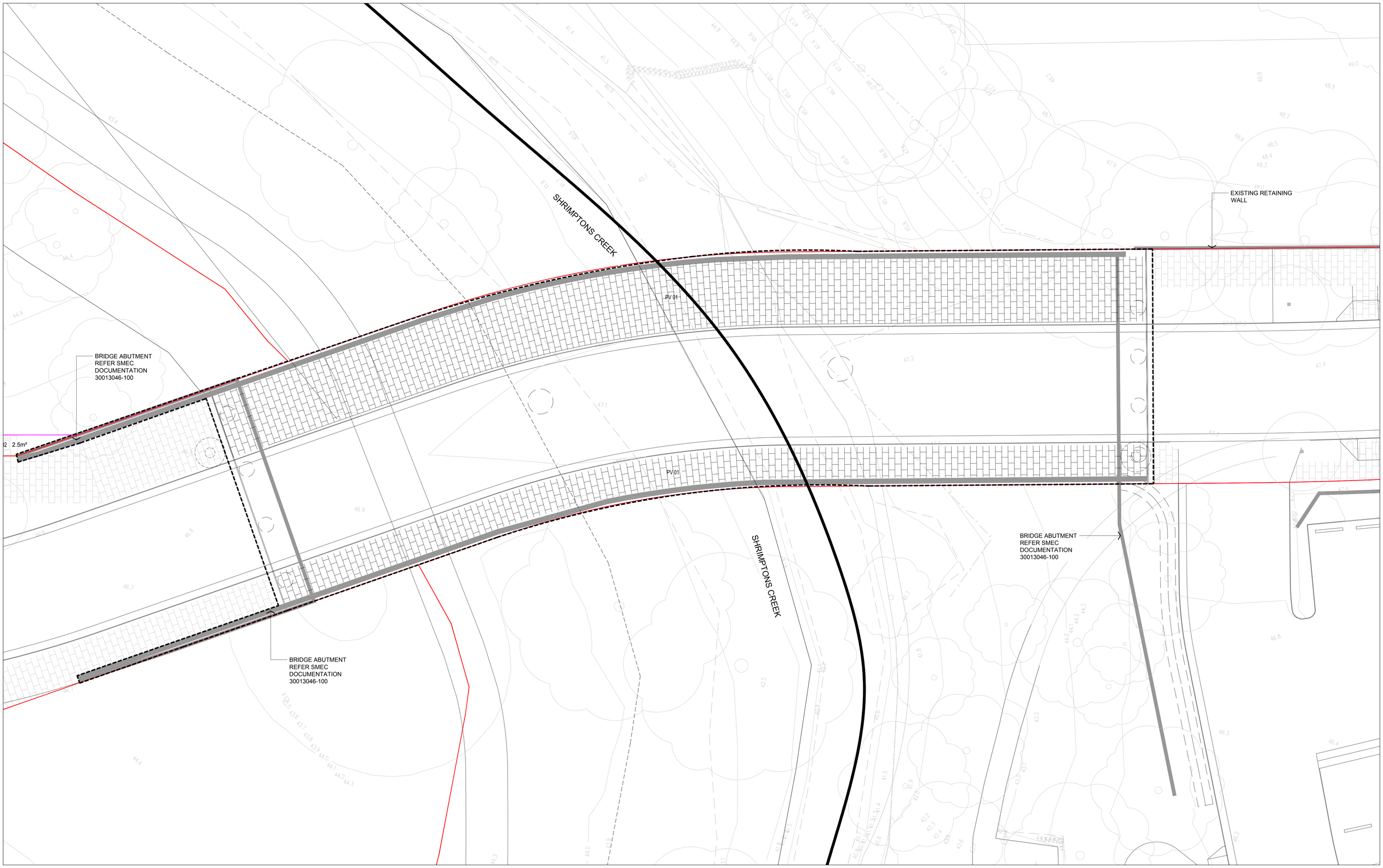

CONSULTANT

Hassell LTD ABN 24 007 711 435
Level2, Pier 8/9,23 Hickson Rd
Sydney NSW 2000 Australia
T +61 2 9101 2000
F +61 2 9101 2100
sydney@hassellstudio.com
Nominated Architects NSW:
Tony Grist 5350
Glenn Scott 6842
Ross de la Motte 7398

REFERENCE

NORTH

NOTES

1. Do not scale drawing. Written dimensions govern
2. All dimensions are in millimeters unless noted otherwise
3. All dimensions shall be verified on site before proceeding with the work. Hassell shall be notified in writing of any discrepancies.
4. This drawing must be read in conjunction with all relevant contracts, specifications and drawings

This drawing is an uncontrolled copy. Unless noted otherwise

© Copyright of this drawing is vested in Hassell Ltd.

REV	DESCRIPTION	DATE
A	FOR TENDER	16 08 2021

CLIENT
FRASERS PROPERTY AUSTRALIA

PROJECT
STAGE 1B STREETSCAPES
MIDTOWN IVANHOE, MACQUARIE PARK
SYDNEY, NSW 2113

STATUS
TENDER DOCUMENTATION

DRAWING TITLE
DETAIL PLAN - SHRIMPTONS CREEK BRIDGE

REVIEWED

APPROVED

DRAWING NO.
HSL_S1B_5001

SCALE @ A1

PROJECT NO.
012092

REV NO.
A

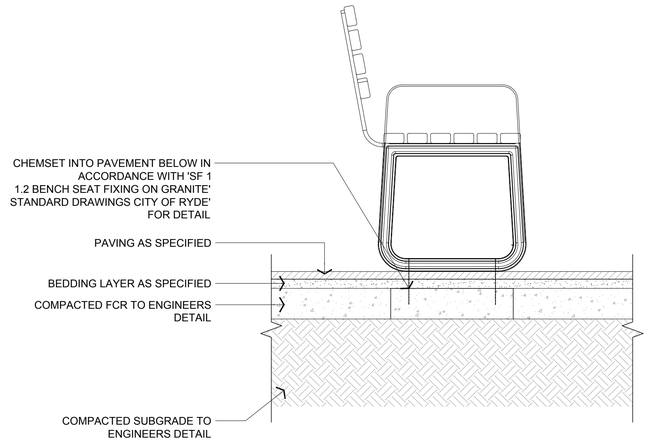

01 FN01/02 - SEAT ON STONE PAVING
ELEVATION - Scale: 1:10@A1

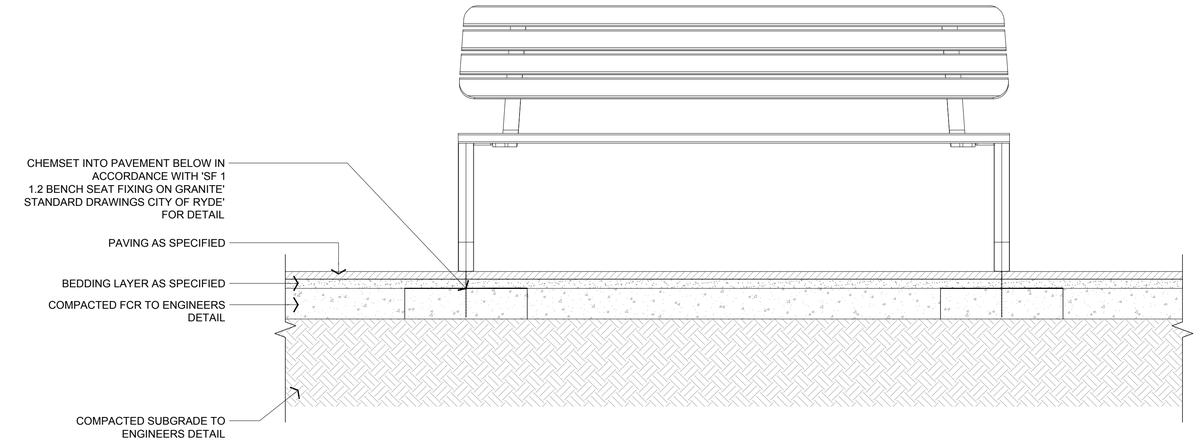

03 FN02 - BENCH ON STONE PAVING
SECTION - Scale: 1:10@A1

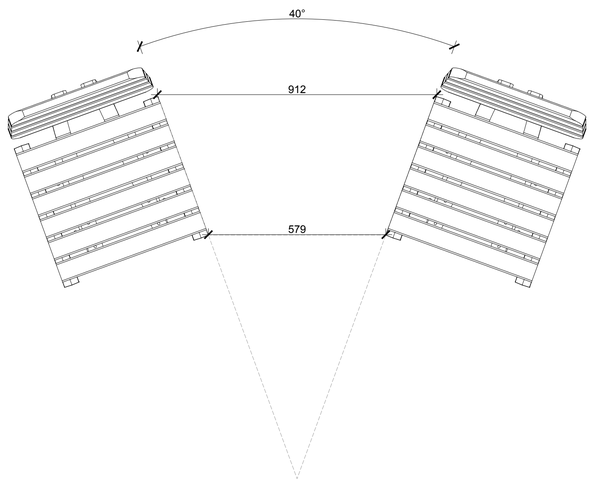

02 FN01 - SEAT SETOUT
PLAN - Scale: 1:10@A1

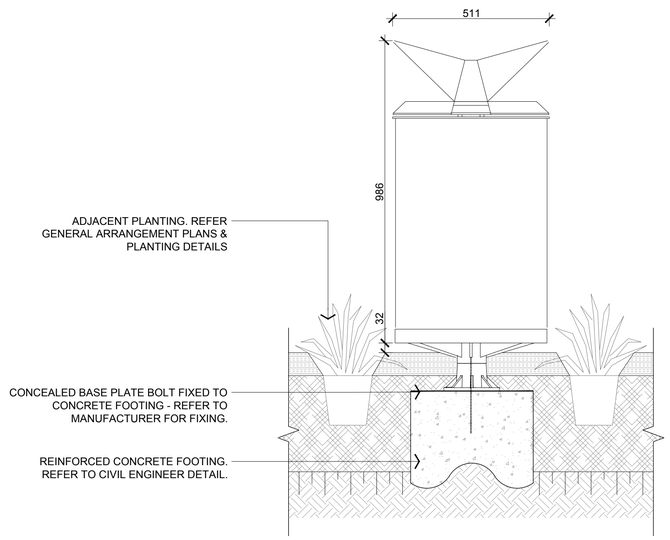

04 FI02 A/B - BIN IN PLANTING
PLAN - Scale: 1:10@A1

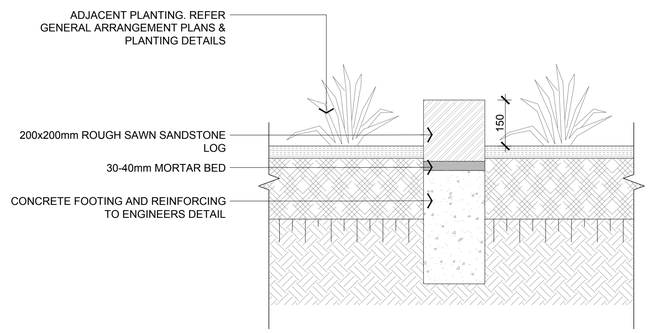

05 FN05 - LINEAR STONE EDGING
PLAN - Scale: 1:10@A1

CONSULTANT

Hassell LTD ABN 24 007 711 435
Level2, Pier 8/9,23 Hickson Rd
Sydney NSW 2000 Australia
T +61 2 9101 2000
F +61 2 9101 2100
sydney@hassellstudio.com
Nominated Architects NSW:
Tony Griet 5350
Glenn Scott 6842
Ross de la Motte 7398

REFERENCE

NORTH

NOTES
1. Do not scale drawing. Written dimensions govern
2. All dimensions are in millimeters unless noted otherwise
3. All dimensions shall be verified on site before proceeding with the work. Hassell shall be notified in writing of any discrepancies.
4. This drawing must be read in conjunction with all relevant contracts, specifications and drawings

This drawing is an uncontrolled copy. Unless noted otherwise

© Copyright of this drawing is vested in Hassell Ltd.

REV	DESCRIPTION	DATE
A	FOR TENDER	16 08 2021

CLIENT
FRASERS PROPERTY AUSTRALIA

PROJECT
STAGE 1B STREETSCAPES
MIDTOWN IVANHOE, MACQUARIE PARK
SYDNEY, NSW 2113

STATUS
TENDER DOCUMENTATION

DRAWING TITLE
DETAILS - FURNITURE & FIXTURES

REVIEWED

APPROVED

DRAWING NO.
HSL_S1B_5201

SCALE @ A1
1:10

PROJECT NO.
012092

REV NO.
A

PRINT INFORMATION_ PRINTED BY: Georgia Darling _ ON: 2021/08/16 _ USING PAGESETUP: ---- _ USING PLOTSTYLE TABLE: halfweight.ctb _ PC3: DWG To PDF.pc3 _ PSLTSCALE: 1 _ LTSCALE: 1.000000

FILENAME \\sydproj\fs03\012092-61A-P\Working\AutoCAD\10_TD_Stage01B\Sheet\HSL_S1B_5201 DETAILS - FURNITURE & FIXTURES.dwg

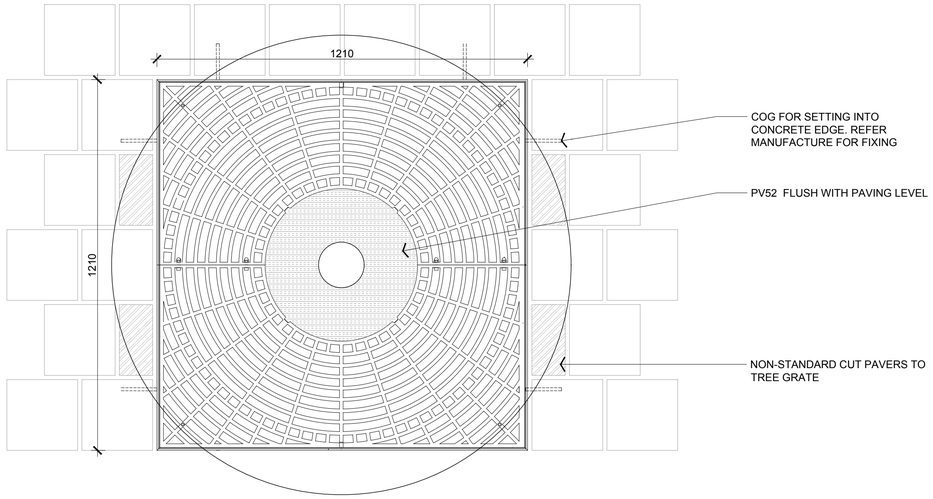

INDICATIVE ETCHING IMAGE

01 FI01 - TREE SURROUNDS IN PV01

ELEVATION - Scale: 1:10@A1

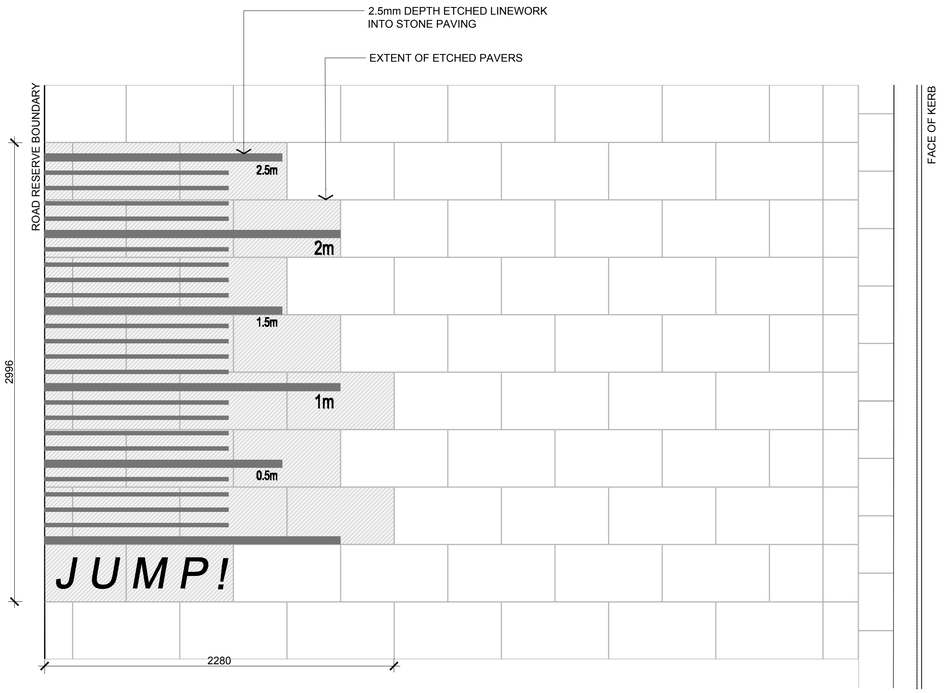

02 FI04 - ETCHED GAME

PLAN - Scale: 1:20@A1

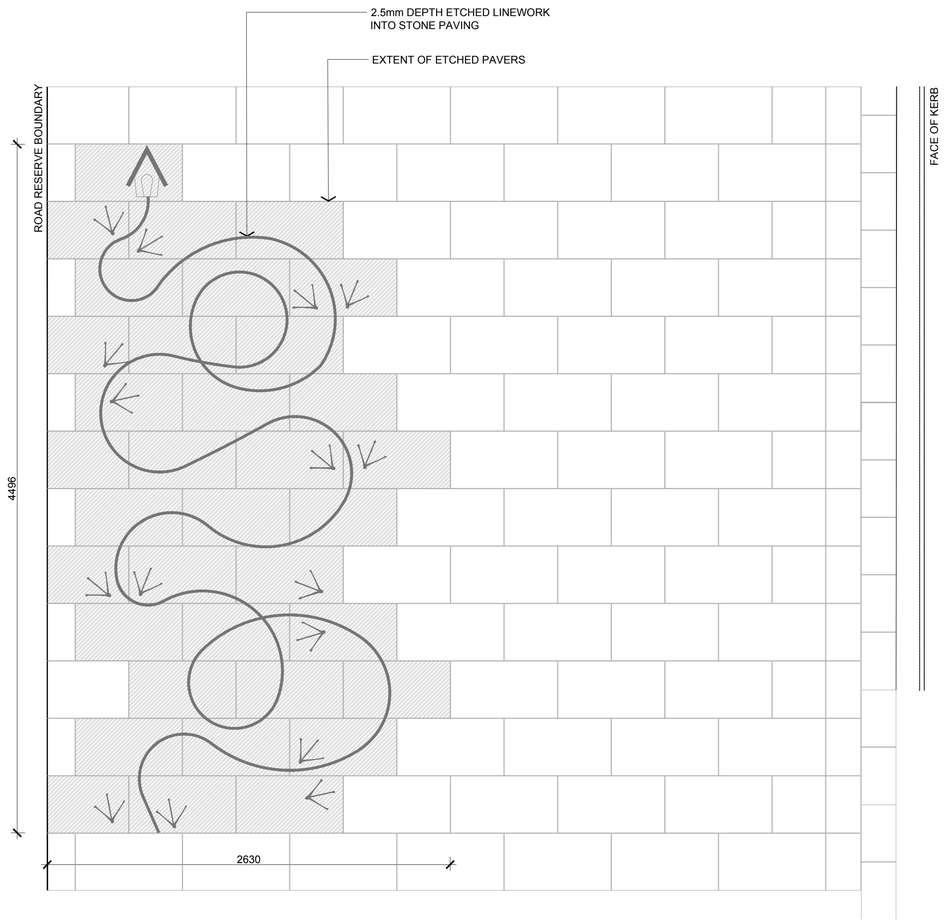

03 FI05 - ETCHED GAME

PLAN - Scale: 1:20@A1

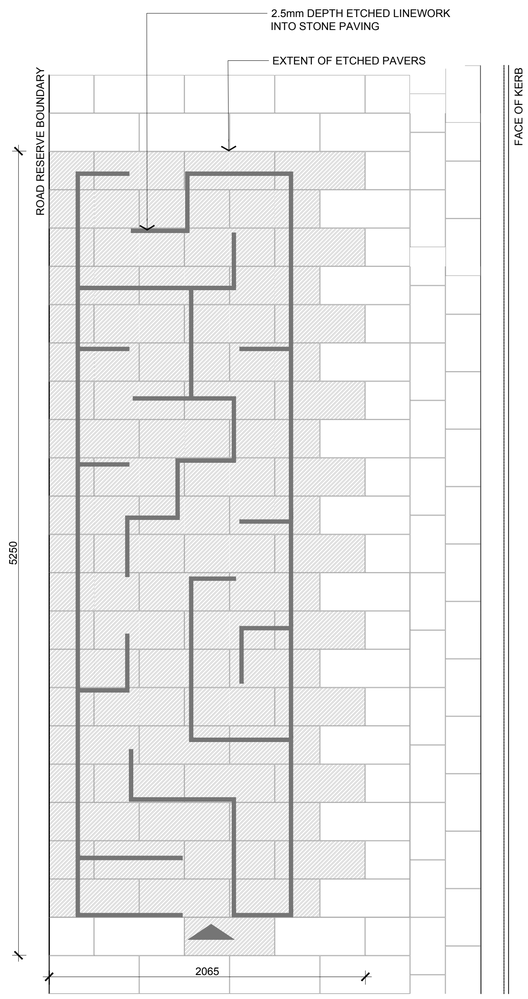

04 FI06 - ETCHED GAME

PLAN - Scale: 1:20@A1

CONSULTANT

Hassell LTD ABN 24 007 711 435
Level2, Pier 8/9,23 Hickson Rd
Sydney NSW 2000 Australia
T +61 2 9101 2000
F +61 2 9101 2100
sydney@hassellstudio.com
Nominated Architects NSW:
Tony Grist 5350
Glenn Scott 6842
Ross de la Motte 7398

REFERENCE

NORTH

NOTES

1. Do not scale drawing. Written dimensions govern
2. All dimensions are in millimeters unless noted otherwise
3. All dimensions shall be verified on site before proceeding with the work. Hassell shall be notified in writing of any discrepancies.
4. This drawing must be read in conjunction with all relevant contracts, specifications and drawings

This drawing is an uncontrolled copy. Unless noted otherwise

© Copyright of this drawing is vested in Hassell Ltd.

REV	DESCRIPTION	DATE
A	FOR TENDER	16 08 2021

CLIENT
FRASERS PROPERTY AUSTRALIA

PROJECT
STAGE 1B STREETSCAPES
MIDTOWN IVANHOE, MACQUARIE PARK
SYDNEY, NSW 2113

STATUS
TENDER DOCUMENTATION

DRAWING TITLE
DETAILS - FURNITURE & FIXTURES

REVIEWED

APPROVED

DRAWING NO.
HSL_S1B_5202

SCALE @ A1
VARIES

PROJECT NO.
012092

REV NO.
A

PRINT INFORMATION_ PRINTED BY: Georgia Darling _ ON: 2021/08/16 _ USING PAGESETUP: ---- _ USING PLOTSTYLE TABLE: halfweight.ctb _ PC3: DWG To PDF.pc3 _ PSLTSCALE: 1 _ LTSCALE: 1.000000

FILENAME \\sydproj\fs03\012092-61A-P\Working\AutoCAD\10_TD_Stage01B\Sheet\HSL_S1B_5202 DETAILS - FURNITURE & FIXTURES.dwg

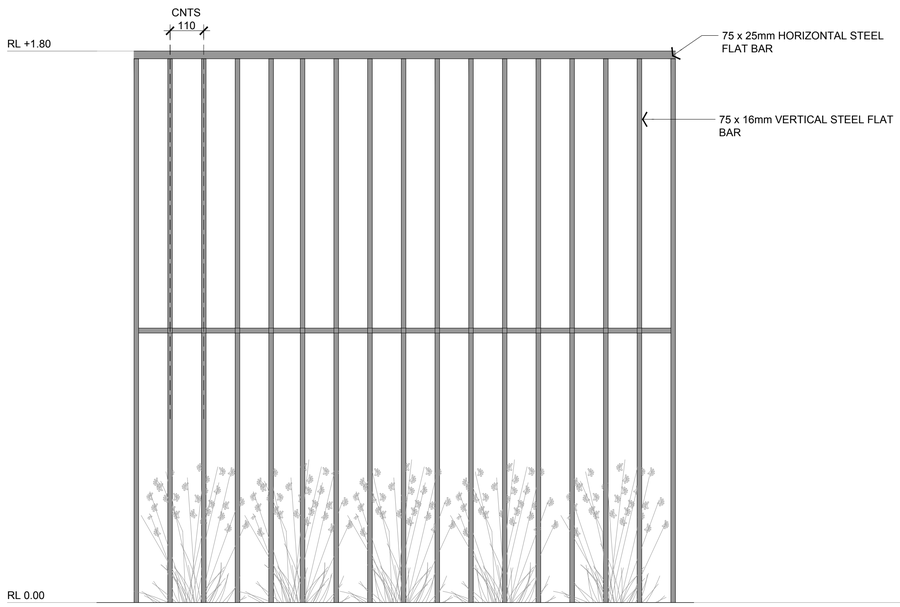

ELEVATION

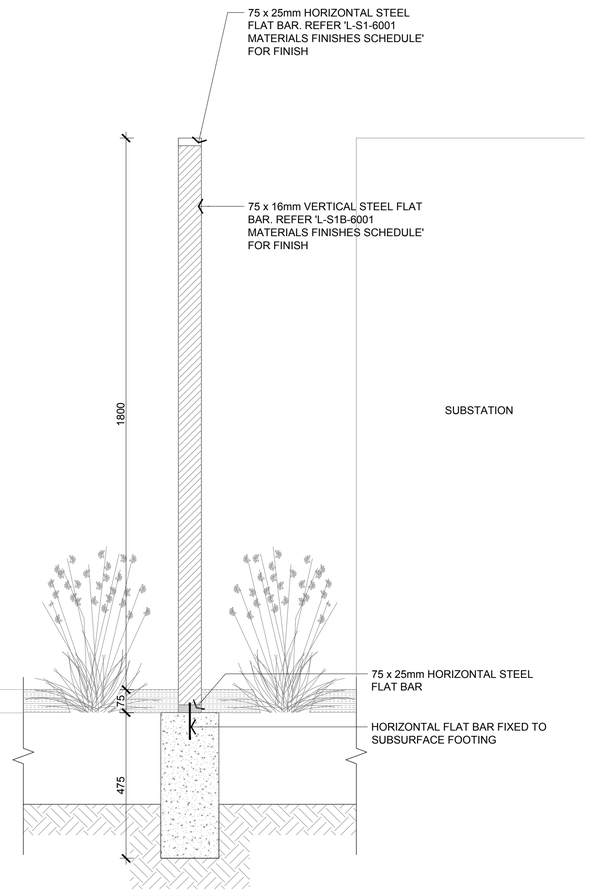

SECTION - AA

01 FE02 - VERTICAL PALISADE FENCE

SECTION - Scale: 1:10@A1

CONSULTANT

Hassell LTD ABN 24 007 711 435
Level2, Pier 8/9,23 Hickson Rd
Sydney NSW 2000 Australia
T +61 2 9101 2000
F +61 2 9101 2100
sydney@hassellstudio.com
Nominated Architects NSW:
Tony Grist 5350
Glenn Scott 6842
Ross de la Motte 7398

REFERENCE

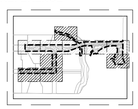

NORTH

NOTES

1. Do not scale drawing. Written dimensions govern
2. All dimensions are in millimeters unless noted otherwise
3. All dimensions shall be verified on site before proceeding with the work. Hassell shall be notified in writing of any discrepancies.
4. This drawing must be read in conjunction with all relevant contracts, specifications and drawings

This drawing is an uncontrolled copy. Unless noted otherwise

© Copyright of this drawing is vested in Hassell Ltd.

REV	DESCRIPTION	DATE
A	FOR TENDER	16 08 2021

CLIENT
FRASERS PROPERTY AUSTRALIA

PROJECT
MIDTOWN IVANHOE
MACQUARIE PARK
SYDNEY, NSW 2113

STATUS
TENDER DOCUMENTATION

DRAWING TITLE
DETAILS - FURNITURE & FIXTURES

REVIEWED

APPROVED

DRAWING NO.
HSL_S1B_5203

SCALE @ A1
1:10

PROJECT NO.
012092

REV NO.
A

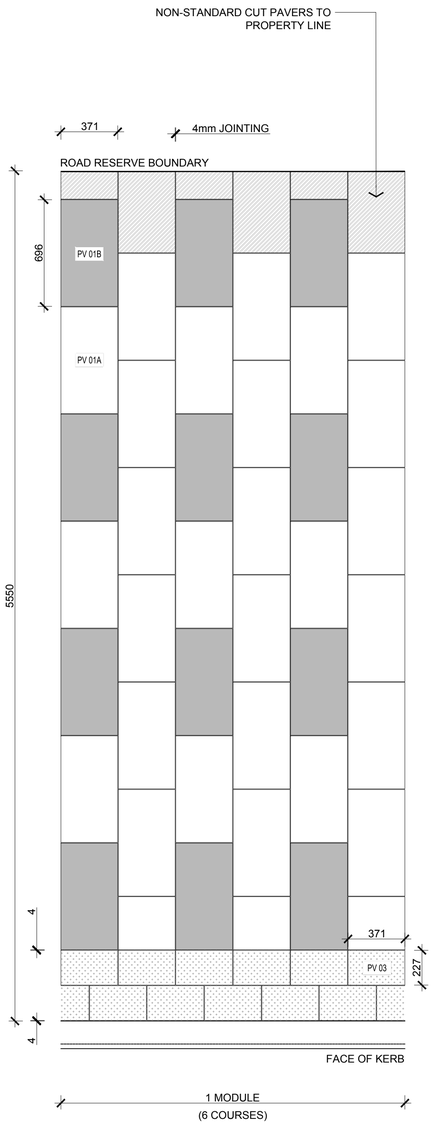

01 PV01 / PV03 - MAIN STREET PAVING

PLAN - Scale: 1:20@A1

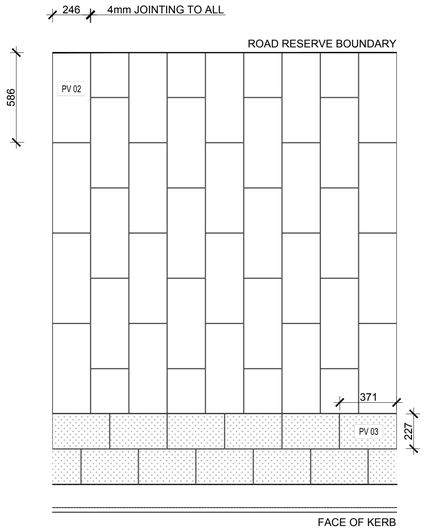

02 PV02 / PV03 - NEIGHBOURHOOD STREET PAVING

PLAN - Scale: 1:20@A1

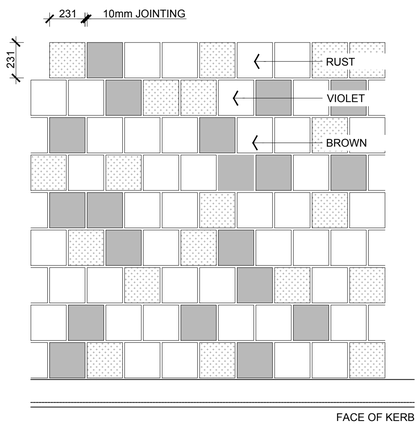

NOTE: PAVING COLOURS TO BE SET OUT IN AN IRREGULAR MIX ACROSS THE GRID. NO SAME COLOURS TO OCCUR IN A ROW OF THREE OR MORE

03 PV04 - MAIN STREET ARRIVAL

PLAN - Scale: 1:20@A1

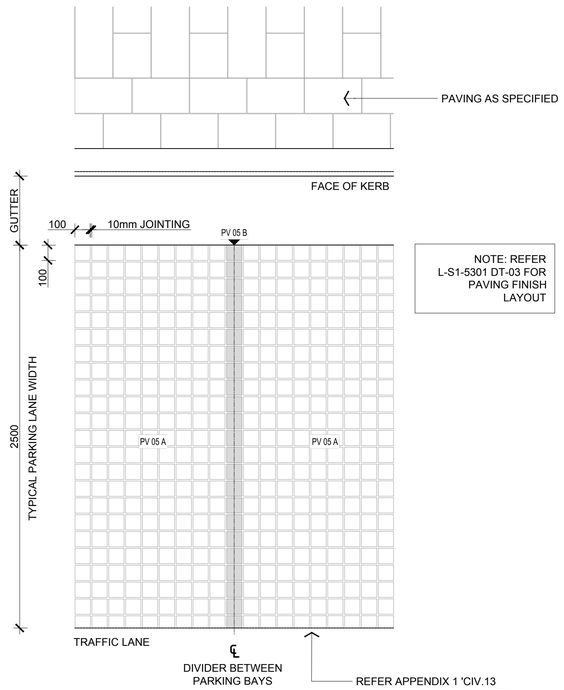

NOTE: REFER L-S1-5301 DT-03 FOR PAVING FINISH LAYOUT

04 PV05 - PARKING BAYS

PLAN - Scale: 1:20@A1

CONSULTANT

Hassell LTD ABN 24 007 711 435
Level2, Pier 8/9,23 Hickson Rd
Sydney NSW 2000 Australia
T +61 2 9101 2000
F +61 2 9101 2100
sydney@hassellstudio.com
Nominated Architects NSW:
Tony Grist 5350
Glenn Scott 6842
Ross de la Motte 7398

REFERENCE

NORTH

NOTES

1. Do not scale drawing. Written dimensions govern
2. All dimensions are in millimeters unless noted otherwise
3. All dimensions shall be verified on site before proceeding with the work. Hassell shall be notified in writing of any discrepancies.
4. This drawing must be read in conjunction with all relevant contracts, specifications and drawings

This drawing is an uncontrolled copy. Unless noted otherwise

© Copyright of this drawing is vested in Hassell Ltd.

REV	DESCRIPTION	DATE
A	FOR TENDER	16 08 2021

CLIENT
FRASERS PROPERTY AUSTRALIA

PROJECT
STAGE 1B STREETSCAPES
MIDTOWN IVANHOE, MACQUARIE PARK
SYDNEY, NSW 2113

STATUS
TENDER DOCUMENTATION

DRAWING TITLE
DETAILS - PAVING

REVIEWED

APPROVED

DRAWING NO.
HSL_S1B_5301

SCALE @ A1
1:20

PROJECT NO.
012092

REV NO.
A

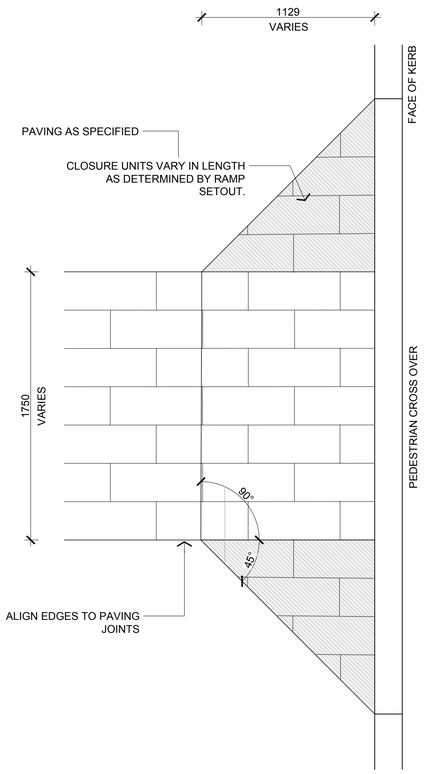

01 STONE PAVING - PEDESTRIAN RAMP

PLAN - Scale: 1:20@A1

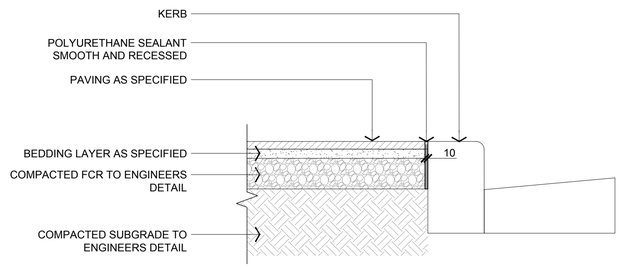

03 JUNCTION - STONE PAVING & KERB

PLAN - Scale: 1:10@A1

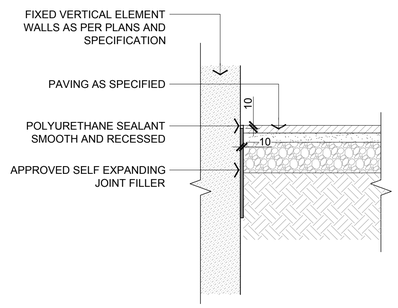

04 JUNCTION - STONE PAVING & WALL

PLAN - Scale: 1:10@A1

CONSULTANT

Hassell LTD ABN 24 007 711 435
Level2, Pier 8/9,23 Hickson Rd
Sydney NSW 2000 Australia
T +61 2 9101 2000
F +61 2 9101 2100
sydney@hasselstudio.com
Nominated Architects NSW:
Tony Grist 5350
Glenn Scott 6842
Ross de la Motte 7398

REFERENCE

NORTH

NOTES

1. Do not scale drawing. Written dimensions govern
2. All dimensions are in millimeters unless noted otherwise
3. All dimensions shall be verified on site before proceeding with the work. Hassell shall be notified in writing of any discrepancies.
4. This drawing must be read in conjunction with all relevant contracts, specifications and drawings

This drawing is an uncontrolled copy. Unless noted otherwise

© Copyright of this drawing is vested in Hassell Ltd.

REV	DESCRIPTION	DATE
A	FOR TENDER	16 08 2021

CLIENT
FRASERS PROPERTY AUSTRALIA

PROJECT
STAGE 1B STREETSCAPES
MIDTOWN IVANHOE, MACQUARIE PARK
SYDNEY, NSW 2113

STATUS
TENDER DOCUMENTATION

DRAWING TITLE
DETAILS - PAVING

REVIEWED

APPROVED

DRAWING NO.
HSL_S1B_5302

SCALE @ A1
VARIES

PROJECT NO.
012092

REV NO.
A

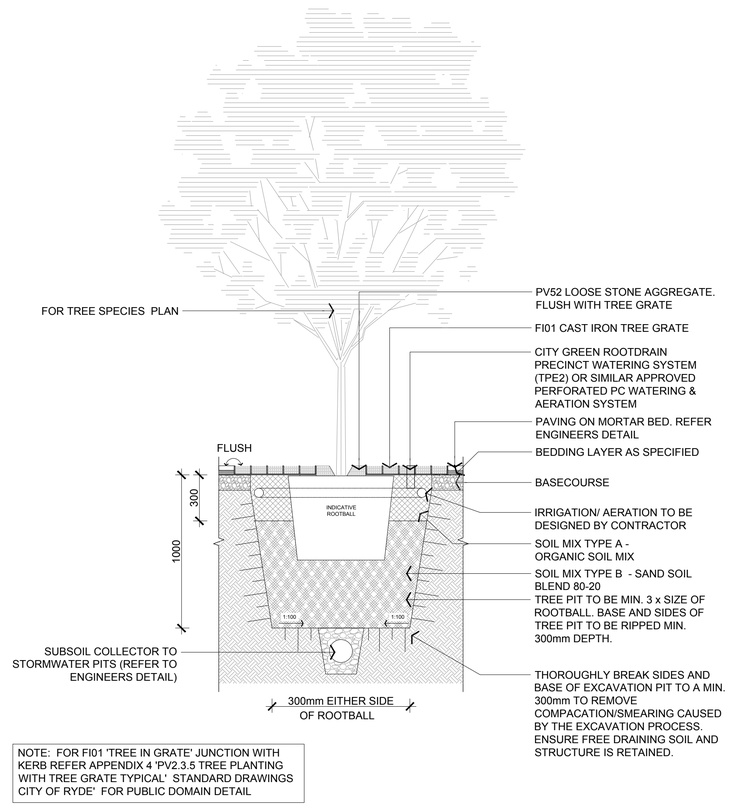

NOTE: FOR FI01 'TREE IN GRATE' JUNCTION WITH KERB REFER APPENDIX 4 'PV2.3.5 TREE PLANTING WITH TREE GRATE TYPICAL' STANDARD DRAWINGS CITY OF RYDE' FOR PUBLIC DOMAIN DETAIL

01 TREE/ FI01 - TREE IN GRATE
SECTION - Scale: 1:20@A1

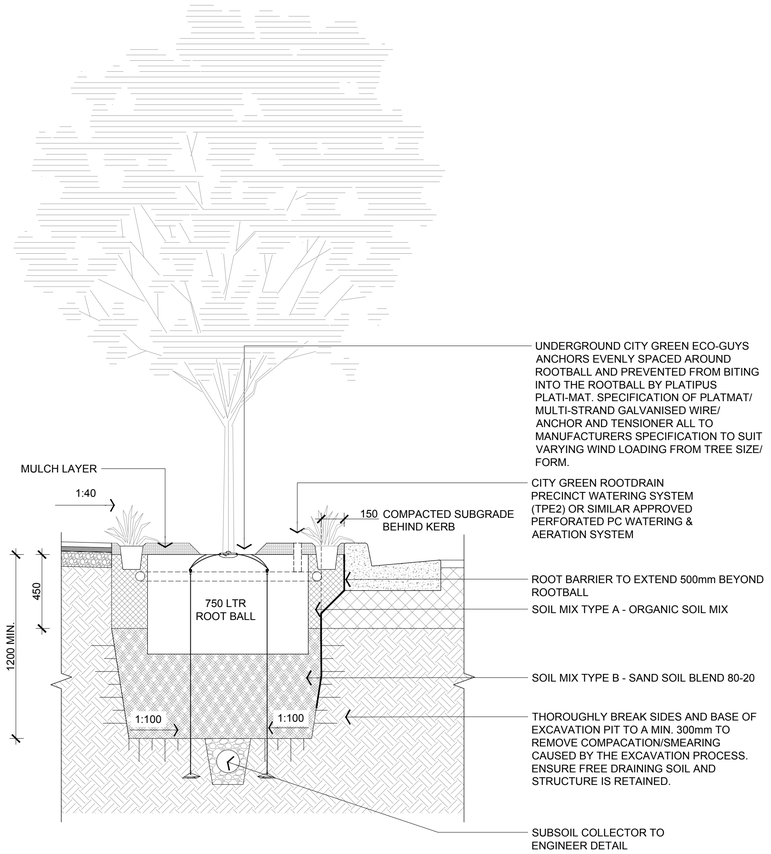

02 TREE - 750LTR STREET TREE
SECTION - Scale: 1:20@A1

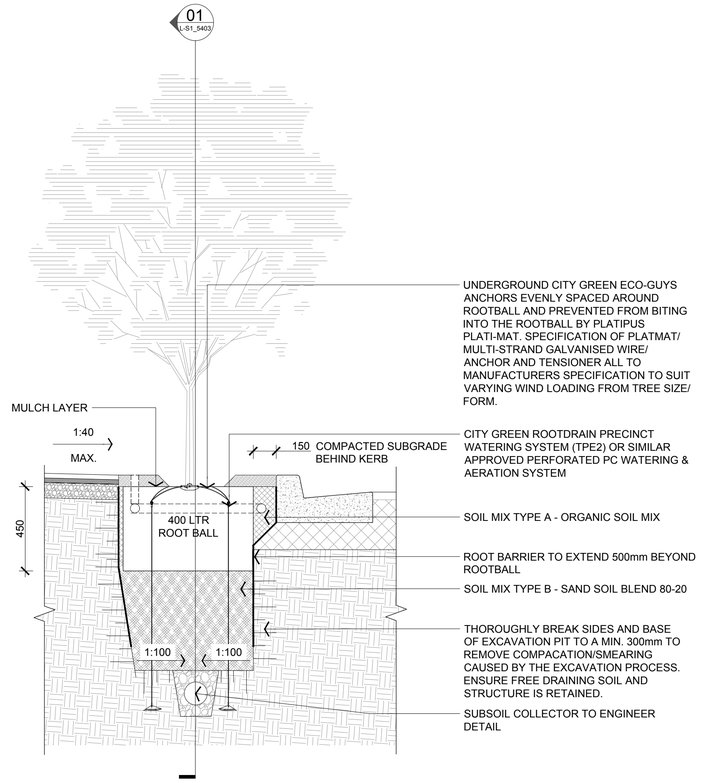

03 TREE - 400LTR STREET TREE
SECTION - Scale: 1:20@A1

DETAIL DISCONTINUED
REFER TO MATERIAL AND FINISHES SCHEDULE

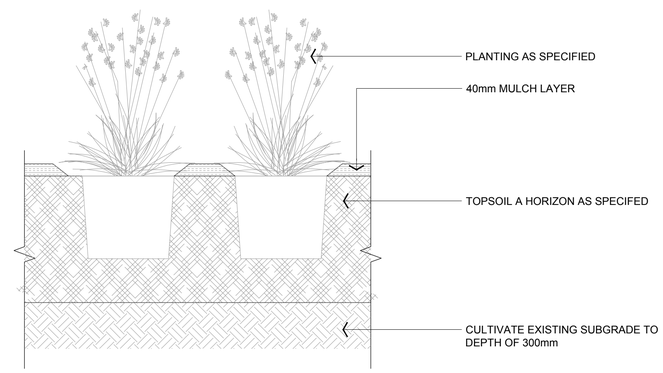

04 PL02/03/09/10 - GROUNDCOVER PLANTING
SECTION - Scale: 1:10@A1

UPDATED TO REFLECT RELEVANT PLANTING MIXES

CONSULTANT

Hassell LTD ABN 24 007 711 435
Level2, Pier 8/9,23 Hickson Rd
Sydney NSW 2000 Australia
T +61 2 9101 2000
F +61 2 9101 2100
sydney@hassellstudio.com
Nominated Architects NSW:
Tony Grist 5350
Glenn Scott 6842
Ross de la Motte 7398

REFERENCE

NORTH

NOTES
1. Do not scale drawing. Written dimensions govern
2. All dimensions are in millimeters unless noted otherwise
3. All dimensions shall be verified on site before proceeding with the work. Hassell shall be notified in writing of any discrepancies.
4. This drawing must be read in conjunction with all relevant contracts, specifications and drawings

This drawing is an uncontrolled copy. Unless noted otherwise

© Copyright of this drawing is vested in Hassell Ltd.

REV	DESCRIPTION	DATE
B	TENDER FOR ADDENDUM	18 10 2021
A	FOR TENDER	16 08 2021

CLIENT
FRASERS PROPERTY AUSTRALIA

PROJECT
STAGE 1B STREETSCAPES
MIDTOWN IVANHOE, MACQUARIE PARK
SYDNEY, NSW 2113

STATUS
TENDER DOCUMENTATION

DRAWING TITLE
DETAILS - PLANTING

REVIEWED

APPROVED

DRAWING NO.
HSL_S1B_5401

REV NO.
B

SCALE @ A1
1:20

PROJECT NO.
012092

PRINT INFORMATION_ PRINTED BY: Chloe Walsh _ ON: 2021/10/18 _ USING PAGESETUP: --- _ USING PLOTSTYLE TABLE: halfweight.ctb _ PC3: DWG To PDF.pc3 _ PSLTSCALE: 1 _ LTSCALE: 1.000000

FILENAME \\syd-p-fs-06\fs04\012092-61a-p\Working\AutoCAD\10_td_stage01b\Sheet\HSL_S1B_5401 DETAILS - PLANTING.dwg

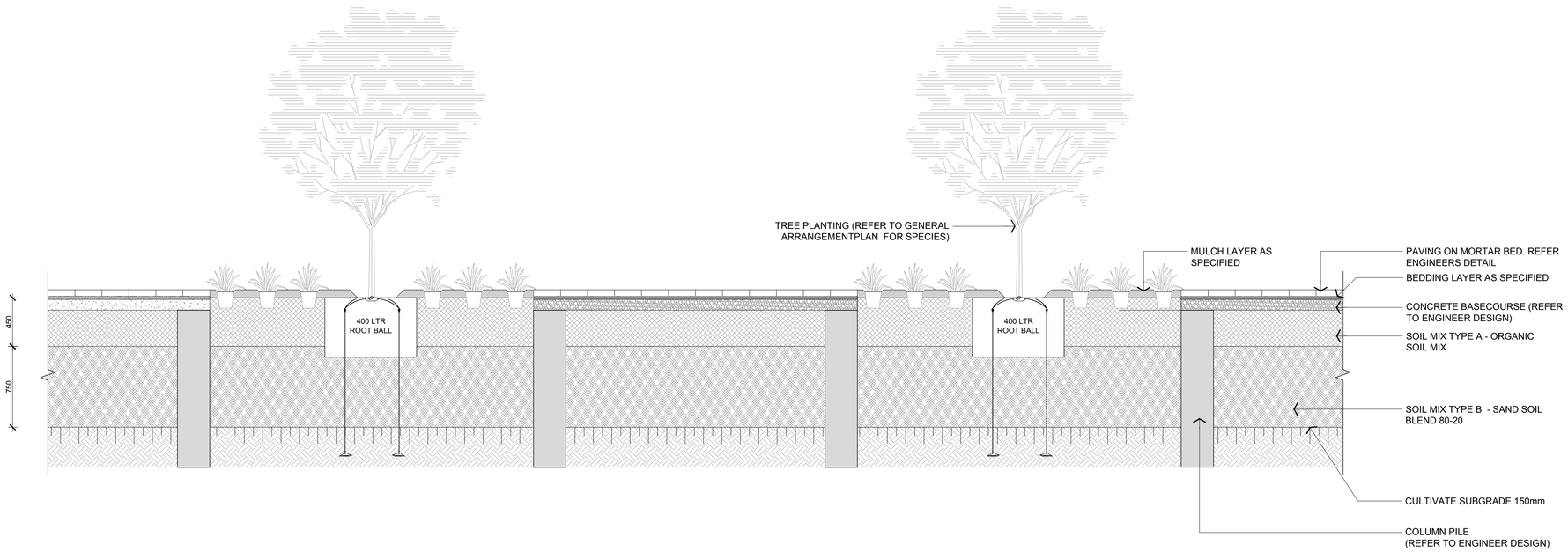

01 TREE - 400LTR STREET TREE

SECTION - Scale: 1:25@A1

CONSULTANT

Hassell LTD ABN 24 007 711 435
Level2, Pier 8/9,23 Hickson Rd
Sydney NSW 2000 Australia
T +61 2 9101 2000
F +61 2 9101 2100
sydney@hassellstudio.com
Nominated Architects NSW:
Tony Grist 5350
Glenn Scott 6842
Ross de la Motte 7398

REFERENCE

NORTH

NOTES

1. Do not scale drawing. Written dimensions govern
2. All dimensions are in millimeters unless noted otherwise
3. All dimensions shall be verified on site before proceeding with the work. Hassell shall be notified in writing of any discrepancies.
4. This drawing must be read in conjunction with all relevant contracts, specifications and drawings

This drawing is an uncontrolled copy. Unless noted otherwise

© Copyright of this drawing is vested in Hassell Ltd.

REV	DESCRIPTION	DATE
A	FOR TENDER	16 08 2021

CLIENT
FRASERS PROPERTY AUSTRALIA

PROJECT
STAGE 1B STREETSCAPES
MIDTOWN IVANHOE, MACQUARIE PARK
SYDNEY, NSW 2113

STATUS
TENDER DOCUMENTATION

DRAWING TITLE
DETAILS - PLANTING

REVIEWED

APPROVED

DRAWING NO.
HSL_S1B_5403

SCALE @ A1
1:25

PROJECT NO.
012092

REV NO.
A

Hassell

MIDTOWN MATERIALS & FINISHES SCHEDULE

Stage 1B Construction Certificate Documentation
L-S1B_6001

Prepared for
Frasers Property Australia

Hassell ©
18 October 2021

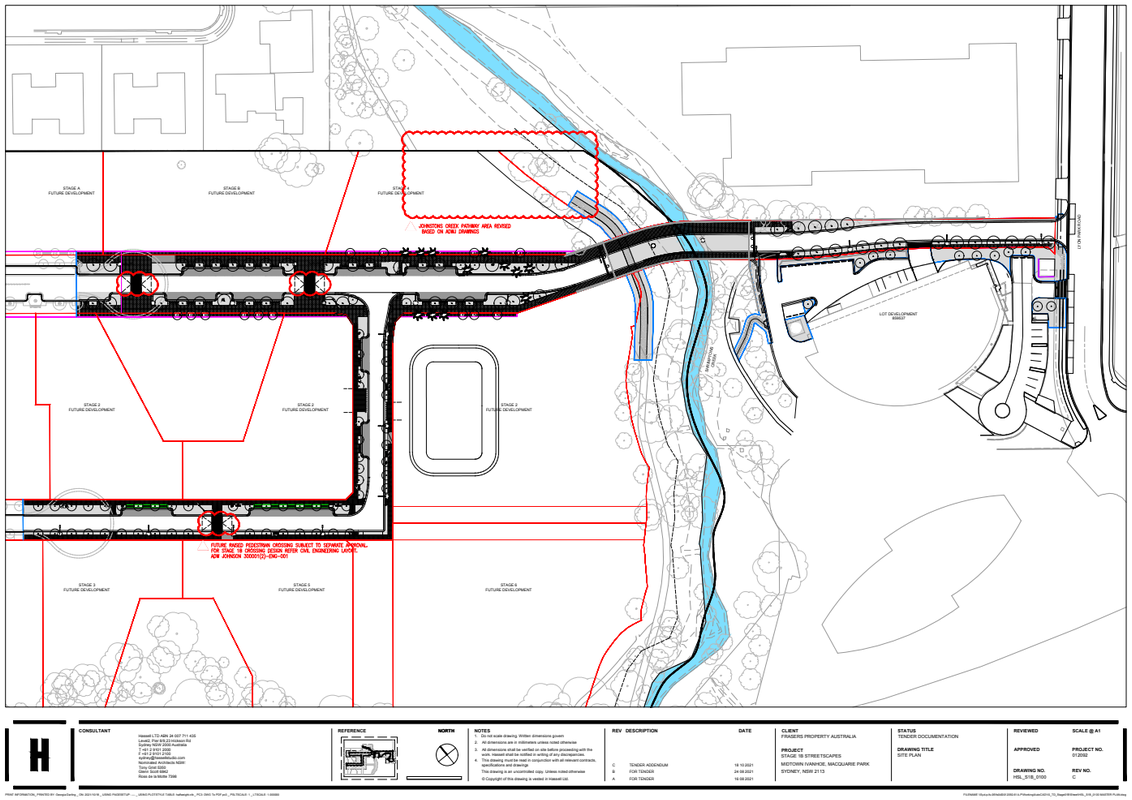

CONSULTANT

Hassell LTD ABN 24 007 711 435
Level2, Pier 8/9 23 Hickson Rd
Sydney NSW 2000 Australia
T +61 2 9101 2000
F +61 2 9101 2100
sydney@hassellstudio.com
hassellstudio.com Nominated Nominated Architect: Tony Gilet 6360
Glenn Scott 6962
Rose de la Motte 7346

REFERENCE

NORTH

NOTES
1. Do not scale drawing. Written dimensions govern
2. All dimensions are in millimetres unless noted otherwise
3. All dimensions shall be verified on site before proceeding with the work. Hassell shall be notified in writing of any discrepancies.
4. This drawing must be read in conjunction with all relevant contracts, specifications and drawings.

This drawing is an uncontrolled copy, unless noted otherwise

© Copyright of this drawing is vested in Hassell Ltd.

REV	DESCRIPTION	DATE
C	TENDER ADDENDUM	18.10.2021
B	FOR TENDER	24.09.2021
A	FOR TENDER	16.09.2021

CLIENT
FRASERS PROPERTY AUSTRALIA

PROJECT
STAGE 1B STREETSCAPES
MIDTOWN IVANHOE, MACQUARIE PARK
SYDNEY, NSW 2113

STATUS
TENDER DOCUMENTATION

DRAWING TITLE
SITE PLAN

REVIEWED

SCALE @ A1

APPROVED

PROJECT NO.
01.0056

DRAWING NO.
HSL_S1B_0100

REV NO.
C

PRINT INFORMATION_PRINTED BY: GeorgiaDarling_ON 2021/10/18 _ LINWIN PAGESETUP: ____ LINWIN PLOTSTYLE TABLE: hatchegacy.ctb _ PC3: DWG To PDF.pc3 _ PAGESIZE: A1 _ LTSCALE: 1.00000

FILENAME: G:\Jobs\HSL\HSL0056 2020-21 Ivanhoe\acad\LS\S1\L_TD_Stage1B\Stage1B_LS_S1B-MASTER.dwg

Contents

Acknowledgment of Country

We acknowledge and respect Traditional Owners across Australia as the original custodians of our land and waters, their unique ability to care for country and deep spiritual connection to it. We honour Elders past, present and emerging whose knowledge and wisdom has, and will, ensure the continuation of cultures and traditional practices.

Hassell
Level 2 Pier 8/9
23 Hickson Road
Sydney NSW Australia 2000
hassellstudio.com
@hassell–studio

Contact
Georgia Darling, Associate
gdarling@hassellstudio.com
Jon Hazelwood, Principal
jhazelwood@hassellstudio.com

Section 1 Furniture, Fixtures and Equipment

Section 2 Hardworks

1.1 FURNITURE

2.1	FURNITURE
CODE	FN 01
DESCRIPTION	SINGLE SEAT 'PRECINCT SEAT'
SUPPLIER	SPARK FURNITURE
FINISH/COLOUR	SEAT: AUSTRALIAN HARDWOOD FRAME: DULUX METROPOLIS BRONZE PEARL
SIZE	500 x 585 x 560mm
LOCATION	STREETSCAPES
DRAWING REF.	L-S1_5201
IMAGE	
CODE	FN 02
DESCRIPTION	BENCH WITH BACKREST 'PRECINCT SEAT'
SUPPLIER	SPARK FURNITURE
FINISH/COLOUR	SEAT: AUSTRALIAN HARDWOOD FRAME: DULUX METROPOLIS BRONZE PEARL
SIZE	1800 x 585 x 560mm
LOCATION	STREETSCAPES
DRAWING REF.	L-S1_5201
IMAGE	
CODE	FN 04
DESCRIPTION	BENCH WITH BACKREST 'PRECINCT SEAT'
SUPPLIER	SPARK FURNITURE
FINISH/COLOUR	SEAT: AUSTRALIAN HARDWOOD FRAME: DULUX METROPOLIS BRONZE PEARL
SIZE	1200 x 585 x 560mm
LOCATION	STREETSCAPES
DRAWING REF.	L-S1_5201
IMAGE	

2.1	FURNITURE
CODE	FN 05
DESCRIPTION	LINEAR STONE EDGING
SUPPLIER	ANL
FINISH/COLOUR	ROUGH SAWN SANDSTONE
SIZE	200 x 200mm
LOCATION	NEIGHBOURHOOD COMMUNAL GARDEN
DRAWING REF.	L-S1_5201
IMAGE	

1.2 FIXTURES

2.2	FIXTURES
CODE	FI 01
DESCRIPTION	CAST ALUMINIUM TREE SURROUNDS 'GR2'
SUPPLIER	STREET FURNITURE AUSTRALIA
FINISH/COLOUR	TEXTURA DARK BRONZE 'GY30BA'
SIZE	1212 x 1212 x 40mm
LOCATION	STREETSCAPE
DRAWING REF.	L-S1_5202
IMAGE	
CODE	FI 02A
DESCRIPTION	'80L MONSOON BIN LB8' - GENERAL WASTE
SUPPLIER	STREET FURNITURE AUSTRALIA
FINISH/COLOUR	BODY: JARRAH HARDWOOD OILED BATTEN FIXING: SUBSURFACE HOOP FIXED LID/COLLAR : TEXTURA DARK BRONZE 'GY30BA' GAL. STEEL LINER WITH ASHTRAY
SIZE	515 DIA x 955MM
LOCATION	STREETSCAPE
DRAWING REF.	L-S1_5201
IMAGE	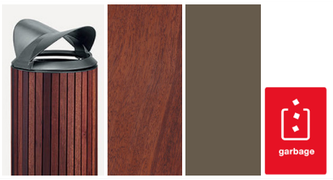
CODE	FI 02B
DESCRIPTION	'80L MONSOON BIN LB8' - RECYCLING
SUPPLIER	SEE F1 02A
FINISH/COLOUR	SEE F1 02A
SIZE	SEE F1 02A
LOCATION	SEE F1 02A
DRAWING REF.	SEE F1 02A
IMAGE	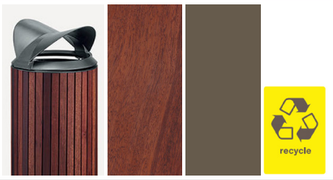

2.2	FIXTURES
CODE	FI-07
DESCRIPTION	NATIVE BIRD NESTING BOX
SUPPLIER	BIRD BOX AUSTRALIA
FINISH/COLOUR	NATURAL TIMBER
SIZE	250 x 250 x 600
LOCATION	COMMUNAL GARDEN
DRAWING REF.	TO MANUFACTURER'S DETAIL
IMAGE	
CODE	FE-02
DESCRIPTION	VERTICAL PALISADE FENCE
SUPPLIER	FINISH - ASTOR METAL FINISHES
FINISH/COLOUR	DULUX DURATEC/ BRONZE PEARL SATIN
SIZE	REFER DETAIL
LOCATION	LGS CAR PARK
DRAWING REF.	HSL_S1B_5203

2.1 STREETSCAPE HARDWORKS

3.1	STREETSCAPE HARDWORKS
CODE	PV 01A
DESCRIPTION	GRANITE PAVING - MAIN 1
SUPPLIER	SAM THE PAVING MAN
FINISH/ COLOUR	HONEY JASPER - EXFOLIATED
SIZE	371 x 696 x 60mm
LOCATION	FOOTPATH - MAIN STREET
DRAWING REF.	L-S1_5301
IMAGE	
CODE	PV 01B
DESCRIPTION	GRANITE PAVING - MAIN 2
SUPPLIER	SAM THE PAVING MAN
FINISH/ COLOUR	MOSAIC RED - EXFOLIATED
SIZE	371 x 696 x 60mm
LOCATION	FOOTPATH - MAIN STREET
DRAWING REF.	L-S1_5301
IMAGE	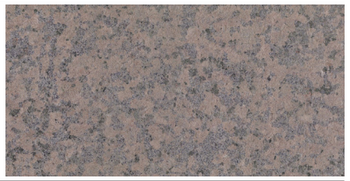
CODE	PV 02
DESCRIPTION	FOOTPATH PAVING
SUPPLIER	SAM THE PAVING MAN
FINISH/ COLOUR	HONEY JASPER - EXFOLIATED
SIZE	246 x 696 x 60mm
LOCATION	NEIGHBOURHOOD STREETS
DRAWING REF.	L-S1_5301
IMAGE	

CODE	PV 03
DESCRIPTION	GRANITE PAVER - HEADER
SUPPLIER	SAM THE PAVING MAN
FINISH/COLOUR	HONEY JASPER - PINEAPPLE
SIZE	227 X 371 x 60mm
LOCATION	MAIN & NEIGHBOURHOOD STREETS
DRAWING REF.	L-S1_5301
IMAGE	
CODE	PV 04 A
DESCRIPTION	GRANITE PAVING - SQUARE
SUPPLIER	SAM THE PAVING MAN
FINISH/COLOUR	ITALIA POPRPHRY - BROWN/RUST/VIOLET
SIZE	231 x 231 x 60mm
LOCATION	MAIN STREET ARRIVAL
DRAWING REF.	L-S1_5301
IMAGE	
CODE	PV 04 B
DESCRIPTION	GRANITE PAVING - SQUARE (TRAFFICABLE)
SUPPLIER	SAM THE PAVING MAN
FINISH/COLOUR	ITALIA POPRPHRY - BROWN/ RUST/ VIOLET
SIZE	231 x 231 x 80mm
LOCATION	MAIN STREET ARRIVAL
DRAWING REF.	L-S1_5301
IMAGE	

2.1 STREETSCAPE HARDWORKS

CODE	PV 05 A
DESCRIPTION	GRANITE PAVING - PARKING 1 (TRAFFICABLE)
SUPPLIER	SAM THE PAVING MAN
FINISH/COLOUR	ITALIA POPRPHRY - BROWN/ RUST/ VIOLET
SIZE	100 x 100 x 80mm
LOCATION	MAIN & NEIGHBOURHOOD STREETS
DRAWING REF.	L-S1_5302
IMAGE	
CODE	PV 05 B
DESCRIPTION	GRANITE PAVING - PARKING DIVIDER
SUPPLIER	SAM THE PAVING MAN
FINISH/COLOUR	SAMSON WHITE - EXFOLIATED
SIZE	100 x 100 x 80mm
LOCATION	MAIN & NEIGHBOURHOOD STREETS
DRAWING REF.	L-S1_5302
IMAGE	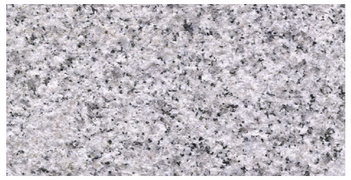
CODE	PV 07
DESCRIPTION	IN SITU CONCRETE FOOTPATH
SUPPLIER	-
FINISH/COLOUR	WHITE, EXPOSED WHITE QUARTZ ROCK & CRUSHED RIVER PEBBLE AGGREGATE
SIZE	SHRIMPTONS CREEK
DRAWING REF.	-
IMAGE	

2.2 WALLS

2.3	WALLS
CODE	WA-02
DESCRIPTION	MASONRY BLOCK RETAINING WALL WITH CAPPING TILE - HEIGHT VARIES
SUPPLIER	AUSTRAL MASONRY
FINISH/COLOUR	NICKLE / GB HONED / RAKED JOINT / WHITE MORTAR / STACK BOND
SIZE	W190 x H190 x L390 / W190 x H40 x L390
LOCATION	ENTRIES, PRIVATE OPEN SPACE & NEIGHBOURHOOD COMMUNAL GARDEN
DRAWING REF.	L-C1-5201
IMAGE	

Studios

Adelaide
Level 1 82 Waymouth Street
Adelaide SA Australia 5000
T +61 8 8220 5000
E adelaide@hassellstudio.com

Brisbane
36 Warry Street
Fortitude Valley QLD Australia 4006
T +61 7 3914 4000
E brisbane@hassellstudio.com

Hong Kong
22F, 169 Electric Road
North Point Hong Kong
T +852 2552 9098
E hongkong@hassellstudio.com

London
1 Curtain Place
London EC2A 3AN United Kingdom
T +44 20 7490 7669
E london@hassellstudio.com

Melbourne
61 Little Collins Street
Melbourne VIC Australia 3000
T +61 3 8102 3000
E melbourne@hassellstudio.com

Perth
Level 1
Commonwealth Bank Building
242 Murray Street
Perth WA Australia 6000
T +61 8 6477 6000
E perth@hassellstudio.com

San Francisco
Level 7 650 California Street
San Francisco CA 94108 United States
T +1 415 860 7067
E sanfrancisco@hassellstudio.com

Shanghai
12F base 45 Caoxi North Road
Xuhui District Shanghai 200030 China
T +8621 5456 3666
E shanghai@hassellstudio.com

Singapore
33 Tras Street
#02-01 078973 Singapore
T +65 6224 4688
E singapore@hassellstudio.com

Sydney
Level 2 Pier 8/9
23 Hickson Road
Sydney NSW Australia 2000
T +61 2 9101 2000
E sydney@hassellstudio.com

Document Control

Rev	Date	Approved By	Description
A	16.08.2021	AE	For Tender
Ab	18.10.2021	AE	For Tender

© Hassell. This document and the ideas incorporated within, as an instrument of professional service, is the property of Hassell. It shall not be used or reproduced in any manner what so-ever, in whole or in part, or for any other project without the prior permission of Hassell.

Hassell

MIDTOWN IVANHOE LANDSCAPE SPECIFICATION

Stage 1B Tender Documentation
HSL-S1B_6003

Prepared for
Frasers Property Australia

Hassell ©
August, 2021

Contents

Acknowledgment of Country

We acknowledge and respect Traditional Owners across Australia as the original custodians of our land and waters, their unique ability to care for country and deep spiritual connection to it. We honour Elders past, present and emerging whose knowledge and wisdom has, and will, ensure the continuation of cultures and traditional practices.

Sections

0171	General Requirements
0241	Landscape - Walling and edging
0242	Landscape - Fences and barriers
0251	Landscape - Soils
0252	Landscape - Soft surfaces
0253	Landscape - Planting
0254	Irrigation
0255	Landscape - Plant Procurement
0256	Landscape - establishment
0274	Concrete pavement
0275	Segmental pavers - mortar bed
0277	Pavement ancillaries
0278	Granular surfaces
0315	Concrete finishes
0316	Precast concrete
0331	Brick and block construction
0332	Stone masonry
0344	Steel - hot-dip galvanized coatings
1424	Landscape - maintenance

0171 GENERAL REQUIREMENTS

1 GENERAL

1.1 RESPONSIBILITIES

General

Requirement: Conform to the following:

- Architectural documentation: ….
- Civil documentation: ….
- Engineering documentation: ….
- Lighting documentation: ….
- Services documentation: ….
- Signage and wayfinding documentation: ….
- … documentation: ….

Design

Design by contractor: If the contractor provides design, use only appropriately qualified persons and conform to all statutory requirements.

Conflict with the documents: If it is believed that a conflict exists between statutory requirements and the documents, notify the contract administrator immediately and provide a recommendation to resolve the conflict.

Noise levels

General: Install systems in conformance with the **Noise level schedule** and within the limits of the contract design and documented equipment performance.

1.2 PRECEDENCE

General

Worksections and referenced documents:

- The requirements of other worksections of the specification override conflicting requirements of this worksection.
- The requirements of the worksections override conflicting requirements of their referenced documents.
- The requirements of the referenced documents are minimum requirements.

1.3 CROSS REFERENCES

General

Requirement: Conform to the following:

- *Landscape Architectural Materials and Finishes Schedule*.

Cross referencing styles

Within the text:

- Worksection titles are indicated by *Italicised* text.
- Subsection titles are indicated by **BOLD** text.
- Clause titles are indicated by **Bold** text.

1.4 REFERENCED DOCUMENTS

Contractual relationships

General: Responsibilities and duties of the principal, contractor and contract administrator are not altered by requirements in the documents referenced in this specification.

Current editions

General: Use referenced documents which are the editions, with amendments, current 3 months before the closing date for tenders, except where other editions or amendments are required by statutory authorities.

1.5 INTERPRETATION

Abbreviations

General: For the purposes of this specification the following abbreviations apply:

- AS: Australian Standard.
- BCA: Building Code of Australia.
- EMC: Electromagnetic compatibility.
- MSDS: Material safety data sheets.
- NATA: National Association of Testing Authorities.
- NZS: New Zealand Standard.
- VOC: Volatile organic compound.

Definitions

General: For the purposes of this specification, the definitions given below apply.

- Attendance: Attendance, provide attendance and similar expressions mean give assistance for examination and testing.
- Contract administrator: Contract administrator has the same meaning as architect or superintendent and is the person appointed by the owner or principal under the contract.
- Default: Specified value, product or installation method which is to be provided unless otherwise documented.
- Design life: The period of time for which it is assumed, in the design, that an asset will be able to perform its intended purpose with only anticipated maintenance but no major repair or replacement being necessary.
- Documented: Documented, as documented and similar terms mean contained in the contract documents.
- Economic life: The period of time from the acquisition of an asset to when the asset, while still physically capable of fulfilling its function and with only anticipated maintenance, ceases to be the lowest cost alternative for satisfying that function.
- Geotechnical site investigation: The process of evaluating the geotechnical characteristics of the site in the context of existing or proposed construction.
- Give notice: Give notice, submit, advise, inform and similar expressions mean give notice (submit, advise, inform) in writing to the contract administrator.
- High level interface: Systems transfer information in a digital format using an open system interface.
- Hot-dip galvanized: Zinc coated to AS/NZS 4680 after fabrication with coating thickness and mass to AS/NZS 4680 Table 1.
- IP: IP, IP code, IP rating and similar expression have the same meaning as IP Code in AS 60529.
- Joints:
  - Construction joint: A joint with continuous reinforcement provided to suit construction sequence.
  - Control joint: An unreinforced joint between or within discrete elements of construction which allows for relative movement of the elements.
  - Contraction joint: An opening control joint with a bond breaking coating separating the joint surfaces to allow independent and controlled contraction of different parts or components, induced by shrinkage, temperature changes or other causes. It may include unbound dowels to assist vertical deflection control.
  - Expansion joint: A closing control joint with the joint surfaces separated by a compressible filler to allow axial movement due to thermal expansion or contraction with changes in temperature or creep. It may include unbound dowels to assist vertical deflection control.
  - Isolation joint: A joint between elements of a structure designed to isolate structural movement while permitting horizontal and/or vertical movement between abutting elements
  - Weakened plane joint: A contraction joint created by forming a groove, extending at least one quarter the depth of the section, either by using a grooving tool, by sawing, or by inserting a premoulded strip.
  - Structural control joint: A control joints (contraction, expansion and isolation) in structural elements when used with applied material and finishes.

  . Substrate joint: A joint in the substrate which includes construction joints and joints between different materials.
  . Sealant joint: A joint filled with a flexible synthetic compound which adheres to surfaces within the joint to prevent the passage of dust, moisture and gases.
- Local government authority: A body established for the purposes of local government by or under a law applying in a state or territory.
- Low level interface: Systems transfer information via terminals and voltage free contacts.
- Manufacturer's and supplier's recommendations: Recommendations, instructions, requirements, specifications (and similar expressions) provided in written or other form by the manufacturer relating to the suitability, use, installation, storage and/or handling of a product.
- Metallic-coated: Steel coated with zinc or aluminium-zinc alloy as follows:
  . Metallic-coated steel sheet: To AS 1397. Metal thicknesses specified are base metal thicknesses.
  . Ferrous open sections zinc coated by an in-line process: To AS/NZS 4791.
  . Ferrous hollow sections zinc coated by a continuous or specialised process: To AS/NZS 4792.
- Network Utility Operator: A person who undertakes the piped distribution of drinking water or natural gas for supply or is the operator of a sewerage system or a stormwater system.
- Network Distributor: Body responsible for the distribution and control of electricity.
- Obtain: Obtain, seek and similar expressions mean obtain (seek) in writing from the contract administrator.
- Practical completion or Defects free completion: The requirements for these stages of completion are defined in the relevant building contract for the project.
- Pipe: Includes pipe and tube.
- Principal: Principal has the same meaning as owner, client and proprietor and is the party to whom the contractor is legally bound to construct the works.
- Professional engineer: As defined by the BCA.
- Proprietary: Proprietary means identifiable by naming manufacturer, supplier, installer, trade name, brand name, catalogue or reference number.
- Provide: Provide and similar expressions mean supply and install and include development of the design beyond that documented.
- Readily accessible: To AS/NZS 3000.
- Registered testing authority:
  . An organisation registered by the National Association of Testing Authorities (NATA) to test in the relevant field; or
  . An organisation outside Australia registered by an authority recognised by NATA through a mutual recognition agreement; or
  . An organisation recognised as being a Registered Testing Authority under legislation at the time the test was undertaken.
- Required: Means required by the documents, the local council or statutory authorities.
- If required: A conditional specification term for work which may be shown in the documents or is a legislative requirement.
- Samples: Includes samples, prototypes and sample panels.
- Statutory authority: A public sector entity created by legislation, that is, a specific law of the Commonwealth.
- Supply: Supply, furnish and similar expressions mean supply only.
- Tests:
  . Pre-completion tests: Tests carried out before completion tests.
    * Type tests: Tests carried out on an item identical with a production item, before delivery to the site.
    * Production tests: Tests carried out on a purchased item, before delivery to the site.
    * Progressive tests: Tests carried out during installation to demonstrate performance in according with this specification.
    * Site tests: Tests carried out on site.

. Completion tests: Tests carried out on completed installations or systems and fully resolved before the date for, to demonstrate that the installation or system, including components, controls and equipment, operates correctly, safely and efficiently, and meets performance and other requirements. The contract administrator may direct that completion tests be carried out after the date for practical completion.

- Tolerance: The permitted difference between the upper limit and the lower limit of dimension, value or quantity.
- Verification: Provision of evidence or proof that a performance requirement has been met or a default exists.

1.6 CONTRACT DOCUMENTS

General

Requirement: Always refer to specialist engaged consultant documentation, including but not limited to, architectural, civil, engineering, lighting, services, and signage and wayfinding.

Services diagrammatic layouts

General: Layouts of service lines, plant and equipment shown on the drawings are diagrammatic only, except where figured dimensions are provided or calculable.

Before commencing work:

- Obtain measurements and other necessary information.
- Coordinate the design and installation in conjunction with all trades.

Levels

General: Spot levels take precedence over contour lines and ground profile lines.

Drawings and manuals for existing services

Warranty: No warranty is given as to the completeness or accuracy of drawings and/or manuals of existing services.

1.7 INSPECTION

Notice

Concealment: If notice of inspection is required in respect of parts of the works that are to be concealed, advise when the inspection can be made before concealment.

Tests: Give notice of the time and place of documented tests.

Minimum notice for inspections to be made and for witnessing of tests: Conform to the **Notices schedule**.

Light level requirements: to AS/NZS 1680.2.4.

Attendance

General: Provide attendance for documented inspections and tests.

1.8 SUBMISSIONS

General

Submit to: Principal and Hassell.

Default timing: Make submissions at least 10 working days before ordering products for, or starting installation of, the respective portion of the works.

Program: Allow in the construction program for at least the following times for response to submissions:

Shop drawings: 10 working days for initial review and 5 working days for each resubmittal.

Samples and prototypes: 5 working days.

Manufacturers' or suppliers' recommendations: 5 working days.

Product data: 5 working days.

Product/design substitution or modification: 5 working days.

Proposed products schedules: If major products are not specified as proprietary items, submit a schedule of those proposed for use within 3 weeks of site possession.

Identification
General: Identify the project, contractor, subcontractor or supplier, manufacturer, applicable product, model number and options, as appropriate and include pertinent contract document references. Include service connection requirements and product certification.

Non-compliance: Identify proposals for non-compliance with project requirements, and characteristics which may be detrimental to successful performance of the completed work.

Errors
General: If a submission contains errors, make a new or amended submission as appropriate, indicating changes made since the previous submission.

Submissions - electronic copies
File format: .pdf and, where applicable, .dwg.

Transmission medium: Project web base application.

Submissions - hard copy
Quantity: Two (2) copies of each size.

Size: the same size as the standard contract documents and A3 reduced size.

Authorities
Authorities' approvals: Submit documents showing approval by the authorities whose requirements apply to the work.

Correspondence: Submit copies of correspondence and notes of meetings with authorities whose requirements apply to the work.

Building penetrations
General: If it is proposed to penetrate or fix to the following, submit details of the methods proposed to maintain the required structural, fire and other properties:

Structural building elements including external walls, fire walls, fire doors and access panels, other tested and rated assemblies or elements, floor slabs and beams.

Membrane elements including damp-proof courses, waterproofing membranes and roof coverings. If penetrating membranes, provide a waterproof seal between the membrane and the penetrating component.

Certification
General: Submit certification that the plant and equipment submitted meets all requirements of the contract documents.

Materials and components
Product certification: If products must conform to product certification schemes, submit evidence of conformance.

Product data: For proprietary equipment, submit the manufacturer's product data as follows:

- Technical specifications and drawings.
- Type-test reports.
- Performance and rating tables.
- Recommendations for installation and maintenance.

Substitutions
Identified proprietary items: Identification of a proprietary item does not necessarily imply exclusive preference for the item so identified, but indicates the necessary properties of the item.

Alternatives: If alternatives to the documented products, methods or systems are proposed, submit sufficient information to permit evaluation of the proposed alternatives, including the following:

- Evidence that the performance is equal to or greater than that specified.
- Evidence of conformity to a cited standard.
- Samples.
- Essential technical information, in English.
- Reasons for the proposed substitutions.
- Statement of the extent of revisions to the contract documents.
- Statement of the extent of revisions to the construction program.
- Statement of cost implications including costs outside the contract.

- Statement of consequent alterations to other parts of the works.

Availability: If the documented products or systems are unavailable within the time constraints of the construction program, submit evidence.

Criteria: If the substitution is for any reason other than unavailability, submit evidence that the substitution:

- Is of net enhanced value to the principal.
- Is consistent with the contract documents and is as effective as the identified item, detail or method.

Samples

Submission: Submit nominated samples.

Incorporation of samples: If it is intended to incorporate samples into the works, submit proposals. Incorporate samples in the works which have been endorsed for inclusion. Do not incorporate other samples.

Retention of samples: Keep endorsed samples in good condition on site, until the date of practical completion.

Shop drawings

General: Include dimensioned drawings showing details of the fabrication and installation of structural elements, building components, services and equipment, including relationship to building structure and other services, cable type and size, and marking details.

Diagrammatic layouts: Coordinate work shown diagrammatically in the contract documents, and submit dimensioned set-out drawings.

Services coordination: Coordinate with other building and service elements. Show adjusted positions on the shop and record drawings.

Space requirements: Check space requirements of equipment and services indicated diagrammatically in the contract documents.

Checking: Ensure that the drawings have been checked before submission.

2 PRODUCTS

2.1 GENERAL

Manufacturers' or suppliers' recommendations

General: Provide and select, if no selection is given, transport, deliver, store, handle, protect, finish, adjust and prepare for use the manufactured items in conformance with the current written recommendations and instructions of the manufacturer or supplier.

Proprietary items/systems/assemblies: Assemble, install or fix to substrate in conformance with the current written recommendations and instructions of the manufacturer or supplier.

Project modifications: Advise of activities that supplement, or are contrary to, manufacturers' or suppliers' written recommendations and instructions.

Sealed containers

General: If materials or products are supplied by the manufacturer in closed or sealed containers or packages, bring the materials or products to point of use in the original containers or packages.

Prohibited materials

Do not provide the following:

- Materials listed in the Safe Work Australia Hazardous Substances Information System (HSIS).
- Materials that use chlorofluorocarbon (CFC) or hydro chlorofluorocarbon (HCFC) in the manufacturing process.

2.2 TESTS

Attendance

General: Provide attendance on tests.

Testing authorities

General: Except for site tests, have tests carried out by a Registered testing authority and submit test reports.

- Reports: Submit copies of test reports, including certificates for type tests, showing the observations and results of tests and conformance or non-conformance with requirements.

- Site tests: Use instruments calibrated by authorities accredited by a Registered testing authority.

2.3 MATERIALS AND COMPONENTS

Consistency
General: For each material or product use the same manufacturer or source and provide consistent type, size, quality and appearance.

Corrosion resistance
General: Conform to the following atmospheric corrosivity category as defined in AS/NZS 2312.

Galvanizing
Severe conditions: Galvanize mild steel components (including fasteners) to AS 1214 or AS/NZS 4680 as appropriate, if:

- Exposed to weather.
- Embedded in masonry.
- Exposed to or in air spaces behind the external leaf of masonry walls.
- In contact with chemically treated timber, other than copper chrome arsenate (CCA).

3 EXECUTION

3.1 OFF-SITE DISPOSAL

Removal of material
General: Dispose of building waste material off site to the requirements of the relevant authorities.

3.2 FIXING

General
Suitability: If equipment is not suitable for fixing to non-structural building elements, fix directly to structure and trim around penetrations in non-structural elements.

Fasteners
General: Use proprietary fasteners capable of transmitting the loads imposed, and sufficient to ensure the rigidity of the assembly.

3.3 WARRANTIES

General
General: If a warranty is documented or if a manufacturer's standard warranty extends beyond the end of the defects liability period, name the principal as warrantee. Register with manufacturers as necessary. Retain copies delivered with components and equipment.

Commencement: Commence warranty periods at practical completion or at acceptance of installation, if acceptance is not concurrent with practical completion.

Approval of installer: If installation is not by manufacturer, and product warranty is conditional on the manufacturer's approval of the installer, submit the manufacturer's written approval of the installing firm.

3.4 RECORD DRAWINGS

General
General: Submit record drawings. Show the 'as installed' locations of building elements, plant and equipment. Show off-the-grid dimensions where applicable.

Shop drawings: Submit all documented shop drawings, including 'as installed' amendments.

Services: Show dimensions, types and location of the services in relation to permanent site features and other underground services. Show the spatial relationship to building structure and other services. Include all changes made during commissioning and the maintenance period.

Services below ground or concealed: If services and fittings are below ground or concealed, show the depth and dimensioned references that will allow the future location of the service for maintenance or expansion.

Extensions and/or changes to existing: If a drawing shows extensions and/or alterations to existing installations, include sufficient of the existing installation to make the drawing comprehensible without reference to drawings of the original installation.

Diagrams: Provide diagrammatic drawings of each system including the following:
- Controls.
- Piping including all valves and valve identification tags.
- Principal items of equipment.
- Single line wiring diagrams.
- Acoustic and thermal insulation.
- Access provisions.
- Fixings.
- Fixtures.
- Switchgear and controlgear assembly circuit schedules including electrical service characteristics, controls and communications.
- Charts of valve tag numbers, with location and function of each valve, keyed to flow and control diagrams.

Detention: If on-site detention tanks or pondage are provided include the volume required on the drawing and the permitted flow rate to the connected system.

Domestic cold water or fire mains: Show the pressure available at the initial connection point and the pressure available at the most disadvantaged location on each major section of the works.

Stormwater: If storm water pipes are shown include the pipe size and pipe grade together with the maximum acceptable flow and the actual design flow.

Accuracy

Progress recording: Keep one set of shop drawings on site at all times expressly for the purpose of marking changes made during the progress of the works.

Documents: Incorporate all modifications made during the progress of the work and testing period. Show any provisions for the future.

Endorsement: Sign and date all record drawings.

Drawing layout

General: Use the same borders and title block as the contract drawings.

Quantity and format

General: Conform to **SUBMISSIONS.**

Date for submission

General: Not later than 2 weeks after the date of practical completion.

3.5 OPERATION AND MAINTENANCE MANUALS

General

General: Submit operation and maintenance manuals for the whole of the work.

Authors and compilers: Personnel experienced in the maintenance and operation of equipment and systems installed, and with editorial ability.

Referenced documents: If referenced documents or technical worksections require that manuals be submitted, include corresponding material in the operation and maintenance manuals.

Subdivision: By installation or system, depending on project size.

Contents

General: Include the following:
- Table of contents: For each volume. Title to match cover.
- Directory: Names, addresses, and telephone and facsimile numbers of principal consultant, subconsultants, contractor, subcontractors and names of responsible parties.
- Record drawings: Complete set of record drawings, full size.
- Drawings and technical data: As necessary for the efficient operation and maintenance of the installation.
- Installation description: General description of the installation.
- Systems descriptions and performance: Technical description of the systems installed and mode of operation, presented in a clear and concise format readily understandable by the principal’s staff. Identify function, normal operating characteristics, and limiting conditions.

- Equipment descriptions:
  . Name, address, email address and telephone and facsimile numbers of the manufacturer and supplier of items of equipment installed, together with catalogue list numbers.
  . Schedules (system by system) of equipment, stating locations, duties, performance figures and dates of manufacture. Provide a unique code number cross-referenced to the record and diagrammatic drawings and schedules, including spare parts schedule, for each item of equipment installed.
  . Manufacturers' technical literature for equipment installed, assembled specifically for the project, excluding irrelevant matter. Mark each product data sheet to clearly identify specific products and component parts used in the installation, and data applicable to the installation.
  . Supplements to product data to illustrate relations of component parts. Include typed text as necessary.
- Certificates:
  . Certificates from authorities.
  . Copies of manufacturers' warranties.
  . Product certification.
  . Test certificates for each service installation and all equipment.
  . Test reports
  . Balancing reports for mechanical installations.
  . Control system testing and commissioning results.
- 7 day record of all trends at commissioning.
- Operation procedures:
  . Manufacturers' technical literature as appropriate.
  . Safe starting up, running-in, operating and shutting down procedures for systems installed. Include logical step-by-step sequence of instructions for each procedure.
  . Control sequences and flow diagrams for systems installed.
  . Legend for colour-codes services.
  . Schedules of fixed and variable equipment settings established during commissioning and maintenance.
  . Procedures for seasonal changeovers.
  . If the installation includes cooling towers, a water efficiency management plan.
- Maintenance procedures:
  . Detailed recommendations for preventative maintenance and procedures, including schedule of maintenance work including frequency and manufacturers' recommended tests.
  . Manufacturer's technical literature as appropriate. Register with manufacturer as necessary. Retain copies delivered with equipment.
  . Safe trouble-shooting, disassembly, repair and reassembly, cleaning, alignment and adjustment, balancing and checking procedures. Provide logical step-by-step sequence of instructions for each procedure.
  . Schedule of spares recommended to be held on site, being those items subject to wear or deterioration and which may involve the principal in extended deliveries when replacements are required. Include complete nomenclature and model numbers, and local sources of supply.
  . Schedule of normal consumable items, local sources of supply ,and expected replacement intervals up to a running time of 40 000 hours. Include lubrication schedules for equipment.
  . Schedules for recording recommissioning data to enable changes in the system over time can be identified.
  . Instructions for use of tools and testing equipment.
  . Emergency procedures, including telephone numbers for emergency services, and procedures for fault finding.
  . Material safety data sheets (MSDS).
- Maintenance records:

. Prototype periodic maintenance and performance report to AS 1851, AS/NZS 3666.2 and AS/NZS 3666.3 as appropriate, prepared to include project specific details.

- Submit, in binders which match the manuals, loose leaf log book pages designed for recording completion activities including operational and maintenance procedures, materials used, test results, comments for future maintenance actions and notes covering the condition of the installation. Include completed log book pages recording the operational and maintenance activities performed up to the time of practical completion.
- Number of pages: The greater of 100 pages or enough pages for the maintenance period and a further 12 months.

Format – electronic copies
Printing: Except for drawings required in the **RECORD DRAWINGS** clause provide material that can be legibly printed on A4 size paper.

Scope: Provide the same material as documented for hardcopy in electronic format.

Quantity and format: Conform to **Submissions – electronic copies**.

Format – hard copy
General: A4 size loose leaf, in commercial quality, 4 ring binders with hard covers, each indexed, divided and titled. Include the following features:

- Cover: Identify each binder with typed or printed title *OPERATION AND MAINTENANCE MANUAL*, to spine. Identify title of project, volume number, volume subject matter, and date of issue.
- Dividers: Durable divider for each separate element, with typed description of system and major equipment components. Clearly print short titles under laminated plastic tabs.
- Drawings: Fold drawings to A4 size with title visible, insert in plastic sleeves (one per drawing) and accommodate them in the binders.
- Pagination: Number pages.
- Ring size: 50 mm maximum, with compressor bars.
- Text: Manufacturers' printed data, including associated diagrams, or typewritten, single-sided on bond paper, in clear concise English.

Number of copies: 3.

Date for submission
Date for draft submission: The earlier of the following:

- 2 weeks before the date for practical completion.
- Commencement of training on services equipment.

Date for final submission: Within 2 weeks after practical completion.

3.6 TOOLS AND SPARE PARTS

Spare parts
General: Provide spare parts listed in the appropriate worksections.

Tools and spare parts schedule
General: At least 8 weeks before the date for practical completion, submit a schedule of tools, portable instruments and spare parts necessary for maintenance of the installation. For each item state the recommended quantity and the manufacturer's current price. Include the following in the prices:

- Checking receipt, marking and numbering in conformance with the spare parts schedule.
- Packaging and delivery to site.
- Painting, greasing and packing to prevent deterioration during storage.
- Referencing equipment schedules in the operation and maintenance manuals.
- Suitable means of identifying, storing and securing the tools and instruments. Include instructions for use.

Replacement: Replace spare parts used during the maintenance period.

3.7 COMMISSIONING AND COMPLETION TESTS

Reports
General: Submit reports indicating observations and results of tests and compliance or non-compliance with requirements.

Notice
Inspection: Give sufficient notice for inspection to be made of the commissioning and completion testing of the installation.

Controls
General: Calibrate, set and adjust control instruments, control systems and safety controls.

Samples
General: Remove unincorporated samples on completion.

Circuit protection
General: Confirm that circuit protective devices are sized and adjusted to protect installed circuits.

Completion tests
General: Test the works under the contract to demonstrate compliance with the documented performance requirements of the installation.

Functional checks: Carry out functional and operational checks on energised equipment and circuits and make final adjustments for the correct operation of safety devices and control functions.

Proprietary equipment: Submit type test reports confirming compliance of proprietary equipment.

Sound pressure level measurements: Conform to the following:

- Correction for background noise: To AS/NZS 2107 Table B1.
- External: To AS 1055.1.
- Internal: To AS/NZS 2107.
- Measurement positions: If a test position is designated only by reference to a room or space, do not take measurements less than 1 m from the floor, ground or walls.
- Sound pressure level analysis: Measure the sound pressure level and the background sound pressure level over the full range of octave band centre frequencies from 31.5 Hz to 8 kHz at the designated positions.
- Sound pressure levels: Measure the A-weighted sound pressure levels and the A-weighted background sound pressure levels at the designated positions.

Test instruments: Use instruments calibrated by a Registered testing authority.

Certification
General: On satisfactory completion of the installation and before the date of practical completion, submit certificates stating that each installation is operating correctly.

3.8 TRAINING

General
Duration: Instruction to be available for the whole of the commissioning and running-in periods.

Format: Conduct training at agreed times, at system or equipment location. Also provide seminar instruction to cover all major components.

Operation and maintenance manuals: Use items and procedures listed in the final draft operation and maintenance manuals as the basis for instruction. Review contents in detail with the principal’s staff.

Certification: Provide written certification of attendance and participation in training for each attendee. Provide register of certificates issued.

Demonstrators
General: Use only qualified manufacturer’s representatives who are knowledgeable about the installations.

Maintenance
General: Explain and demonstrate to the principal’s staff the purpose, function and maintenance of the installations.

Operation
General: Explain and demonstrate to the principal’s staff the purpose, function and operation of the installations.

Seasonal operation
General: For equipment requiring seasonal operation, demonstrate during the appropriate season and within 6 months.

3.9 CLEANING

Final cleaning

General: Before practical completion, clean throughout, including all exterior and interior surfaces except those totally and permanently concealed from view.

Labels: Remove all labels not required for maintenance.

3.10 PERIODIC MAINTENANCE OF SERVICES

General

General: During the maintenance period, carry out periodic inspections and maintenance work as recommended by manufacturers of supplied equipment, and promptly rectify faults.

Emergencies: Attend emergency calls promptly.

Annual maintenance: Carry out recommended annual maintenance procedures before the end of the maintenance period.

Maintenance period: The greater of the defects liability period and the period nominated in the **Maintenance requirements schedule**.

Maintenance program

General: Submit details of maintenance procedures and program, relating to installed plant and equipment, 6 weeks before the date for practical completion. Indicate dates of service visits. State contact telephone numbers of service operators and describe arrangements for emergency calls.

Maintenance records

General: Record in binders provided with operation and maintenance manuals.

Referenced documents: If referenced documents or technical worksections require that log books or records be submitted, include this material in the maintenance records.

Service visits: Record comments on the functioning of the systems, work carried out, items requiring corrective action, adjustments made and name of service operator. Obtain the signature of the principal's designated representative.

Site control

General: Report to the principal's designated representative on arriving at and before leaving the site.

3.11 POST-CONSTRUCTION MANDATORY INSPECTIONS AND MAINTENANCE

General

General: For the duration of the defects liability period, provide inspections and maintenance of safety measures required by the following:

- The Building Code of Australia.
- AS 1851.
- Other statutory requirements applicable to the work.

Records: Provide mandatory records.

Certification: Certify that mandatory inspections and maintenance have been carried out and that the respective items conform to statutory requirements. Submit certification.

Annual inspection: Provide an annual inspection and maintenance immediately prior to the end of the defects liability period.

0241 LANDSCAPE – WALLING AND EDGING

1 GENERAL

1.1 RESPONSIBILITIES

General
General: Provide walling and edging as documented.

1.2 CROSS REFERENCES

General
Requirement: Conform to the following:
- *General requirements*.
- Materials and finishes schedule.
- *Concrete finishes*.
- *Brick and block construction*.
- *Stone masonry*.

1.3 INSPECTION

Notice
Inspection: Give notice so inspection may be made of the following:
- Setting out before commencement of construction.
- Geotextiles and subsurface drainage to engineer's requirements.

1.4 SUBMISSIONS

Samples
Submit samples as follows:
- Street Wall – Stone Blockwork – WA 01.
- Insitu Concrete Retaining Wall – WA 02.
- Stretcher Bond Wall – WA 03.
- Planter Walls – Fabricated Steel – WA 04.
- Steel Edge.

2 PRODUCTS

2.1 STONE WALLS

General
Requirement: Conform to section 0332, the materials and finishes schedule, and the design drawings.

Walling stone
Natural stone: Stone of uniform quality, sound and free from defects liable to affect its strength, appearance or durability.

Field stone: Local weathered uncut random sized natural stones.

Quarried stone: Cut or uncut random or regular size stone.

2.2 CONCRETE

General
Requirement: Conform to engineer's documentation, section 0315, the materials and finishes schedule, and the design drawings.

Insitu concrete
Standard: To AS 1379.

Exposure classification: To AS 3600 Table 4.3.

2.3 BRICK WALLS

General
Requirement: Conform to section 0331, the landscape architectural materials and finishes schedule, and the design drawings.

2.4 STEEL WALLS

General
Requirement: Conform to the landscape architectural materials and finishes schedule, and the design drawings.

Steel
Requirement: Prepare shop drawings.

Product: Corten steel.

Thickness: 6mm.

Finish: Pre-weathered with minimum 4-6 wet/dry treatment prior to site delivery.

2.5 EDGING

General
Requirement: As detailed in the design drawings.

Steel
Product: Stainless steel equal angle.

Grade: 316.

Thickness: 3mm.

Finish: Satin.

3 EXECUTION

3.1 GENERAL

Set out
General: Set out the positions of walls and edging and mark the positions of furniture.

Clearing
Extent: Except for trees or shrubs to be retained, clear vegetation within 1 m of the landscape walls. Grub out stumps and roots of removed trees or shrubs and trim the grass to ground level, but do not remove the topsoil.

Excavation
Extent: Excavate for foundations and footings, to engineer's documentation.

3.2 STONE WALLS

General
Requirement: Conform to section 0332, the materials and finishes schedule, and the design drawings.

Construction
Generally: Select the stones for their locations and lay them in the wall with the minimum of stonecutting.

Copings: Select stones of uniform size and finish the top of the wall to a level line.

3.3 CONCRETE

General
Requirement: Conform to engineer's documentation, section 0315, the materials and finishes schedule, and the design drawings.

3.4 BRICK WALLS

General
Requirement: Conform to engineer's documentation, section 0331, the materials and finishes schedule, and the design drawings.

3.5 STEEL WALLS

General
Requirement: Conform to manufacturer's shop drawings, and the design drawings.

3.6 EDGING

Steel
Installation: Set edgings flush with adjoining surfaces and each join. Fix with 600mm long x 12mm diameter pons welded to bottom edge at 1000 mm maximum centres and 200mm in from each end.

0242 LANDSCAPE – FENCES AND BARRIERS

1 GENERAL

1.1 RESPONSIBILITIES

General

General: Provide fences and barrier systems:

- Complete for their function.
- Conforming to the detail and location drawings.
- Firmly fixed in position.

1.2 CROSS REFERENCES

General

Requirement: Conform to the following:

- *General requirements*.
- Materials and finishes schedule.
- *Steel – hot-dip galvanised coatings.*

1.3 INSPECTION

Notice

Inspection: Give notice so inspection may be made of the following:

- Boundary survey location if applicable.
- Setout before construction.
- Foundation conditions before placing concrete in footings.

1.4 SUBMISSIONS

Samples

Submit samples as follows:

- Vertical Palisade Fence – FE 01.

2 PRODUCTS

2.1 STEEL

General

Requirement: Conform to the landscape architectural materials and finishes schedule, and the design drawings.

Steel

Requirement: Prepare shop drawings.

Posts, rails, stays and pickets: To AS/NZS 1163.

- Grade: C 350 L0.

Material: Hot dipped galvanised steel, in accordance with section 0344.

Finish: Painted, colour to be advised.

2.2 CONCRETE

General

Standard: To AS 1379.

Exposure classification: To AS 3600 Table 4.3.

3 EXECUTION

3.1 CONSTRUCTION GENERALLY

Set out
General: Set out the fence line and mark the positions of posts, gates and bracing panels.

Property boundaries: Confirm by survey.

Clearing
Fence line: Except trees or shrubs to be retained, clear vegetation within 1 metre of the fence alignment. Grub out the stumps and roots of removed trees or shrubs and trim the grass to ground level, but do not remove the topsoil.

Excavation
Posts: Excavate post holes so that they have vertical sides and a firm base. If suitable for reuse, relocate surplus material to stockpile, otherwise dispose of off-site.

Erection
Line and level: Erect vertically. Set heights to follow the contours of natural ground.

Concrete footings
General: To manufacturer's shop drawings.

In ground: Place mass concrete around posts to protect posts from waterlogged conditions and finish with a weathered top falling 25 mm from the post to ground level.

On slabs: Provide welded and drilled post base flanges for fixing with masonry anchors to the concrete. Ensure fixings are countersunk and subsurface.

On walls: Core drilled posts into wall, Non-shrink grout to match wall finish.

3.2 GATES

Hardware
Provide the following:

- Drop bolt and ferrule to each leaf of double gates.
- Latch to one leaf of double gates.
- Provision for locking by padlock.
- Hinges to ensure smooth operation and adjustment for future sagging.

Hand access
General: Where required, provide hand holes to give access from outside to reach locking provision.

3.3 FENCING

Steel palisade fence
General: Conform to manufacturer's shop drawings, and the design drawings.

Fixings: Countersunk fixings.

0251 LANDSCAPE – SOILS

1 GENERAL

1.1 RESPONSIBILITIES

General

General: Provide landscape soil as documented.

1.2 CROSS REFERENCES

General

Requirement: Conform to the following:

- *General requirements*.
- *Soft surfaces.*
- *Planting.*

1.3 STANDARDS

Soils

Site and imported topsoil: To AS 4419.

Potting mixes: To AS 3743.

Composts, soil conditioners and mulches: To AS 4454.

1.4 INTERPRETATION

Definitions

General: For the purposes of this worksection the following definitions apply:

- Bad ground: Ground unsuitable for the purposes of the works, including fill liable to subsidence, ground containing cavities, faults or fissures, ground contaminated by harmful substances and ground which is or becomes soft, wet or unstable.
- Site rock: Rocks selected for salvage.
- Site topsoil: Soil excavated from the site which contains organic matter, supports plant life, conforms generally to the fine to medium texture classification to AS 4419 (loam, silt, clay loam) and free from the following:
  - . Stones > 25 mm diameter.
  - . Clay lumps > 75 mm diameter.
  - . Weeds and tree roots.
  - . Sticks and rubbish.
  - . Material toxic to plants.
- Imported topsoil: Similar to naturally occurring local topsoil, suitable for the establishment and on going viability of the selected vegetation, free of weed propagules and of contaminants, and classified by texture as follows to AS 4419 Appendix I:
  - . Fine: Clay loam, fine sandy loam, sandy clay loam, silty loam, loam.
  - . Medium: Sandy loam, fine sandy loam.
  - . Coarse: Sand, loamy sand.
- Low density soil: Soil for use on an artificial base material, e.g. roof top garden or large landscape containers usually be blends of mineral and organic compounds with the following properties:
  - . Bulk density: 0.3 to 0.6 kg/L.
  - . Organic matter: 10 % to 40 % by mass.
- Natural soil: A soil dug from the landscape and presented for use with no more than minor amendment. This soil may be topsoil, subsoil or a mixture of both, with a bulk density < 0.6 kg/L.
- Organic soil: A general purpose soil (normally an amended natural soil or soil blend) with the following properties:
  - . Bulk density: > 0.6 kg/L.

  . Organic matter: 15% to 25% by mass. Naturally occurring organic soil can be 95% organic by mass.
- Soil blend: A general purpose soil derived from the blending of two or more of sand, natural soil material or organic materials and with a bulk density and organic matter to meet site specific requirements.
- Top dressing: A soil suitable for surface application to lawns.

1.5 GEOTECHNICAL SITE INVESTIGATION

Notice
If the following are encountered, give notice immediately and obtain instructions before carrying out any further work in the affected area:
- Bad ground.
- Discrepancies.
- Rock.
- Springs, seepages.
- Topsoil > 100 mm deep.

1.6 INSPECTION

Notice
Inspection: Give notice so inspection may be made of the following:
- Setting out completed.
- Subgrades cultivated or prepared for placing topsoil.
- Topsoil spread before planting.
- Grassing bed prepared before turfing, seeding, or temporary grassing.

1.7 TESTS

Soil tests
General: To AS 4419, Table 1.

Sampling: As recommended in AS 4419 Appendix A.

Laboratory: NATA registered.

Imported topsoil tests: Submit the results of type tests to AS 4419 Appendix B to I (topsoil), or AS 3743 Appendix D to G (potting mixes), as applicable.

Site topsoil tests: To AS 4419 Appendix C to I.

1.8 SUBMISSIONS

Soil tests for imported topsoil
Report: Submit a certificate noting the following:
- Suitability of each soil type for its specified use.
- Similarity to naturally occurring local soil.
- Suitability for establishment and on-going viability of the site specified vegetation.
- Absence of any weed propagules or contaminants.

Ameliorants recommendation: If required to include ameliorants, recommend the source of ameliorant material, rates and methods of incorporation.

Soil tests for site topsoil
Report: Submit a certificate noting the following:
- Suitability of the soil for specified use.
- Suitability for establishment and on-going viability of the site specified vegetation.
- Presence of any weed propagules or contaminants.

Recommendation:
- Soil amelioration: If required to include ameliorants, the source of ameliorant material, rates and methods of incorporation.
- Purpose: Amelioration recommendations for the following:
  . Bushland reconstruction areas.

. Planting on grade.
. Grass mixes.
- Weed eradication: Species and eradication method.
- Contaminant removal.

Samples
General: Submit representative samples of each material, packed to prevent contamination and labelled to indicate source and content.

Bulk materials: Submit a 1 kg sample of each type specified. Submit bulk material samples, with required test results, at least 5 working days before bulk deliveries.

Suppliers
Statements: Submit statements from suppliers of soils and other materials, giving the following, where applicable:
- Particulars of the supplier's experience in the required type of work.
- Production capacity for material of the required type, sizes and quantity.
- Lead times for delivery of the material to the site.

Materials
Supplier's data: Submit supplier's data including the following:
- Material source of supply for topsoil, filling, stone and filter fabrics.

Compost: Submit a certificate of proof of compost pH value.

Execution
Program: Submit a work program in the form of a bar chart, for the landscape works.

2 PRODUCTS

2.1 TOPSOIL

Source
General: Import topsoil fit for purpose and suitable for establishment and longer term survival of the nominated plant material, unless the topsoil type can be provided from material recovered from the site.

General
Deliveries: Documentation to AS 4419, clause 8.

Additives: If using additives to raise topsoil to the required standard, ensure compliance with the relevant test criteria of AS 4419.

Nitrogen drawdown: If the NDI_{150} value is < 0.5 to AS 4419 Appendix E add a source of soluble nitrogen to bring the value above zero.

Compost: Provide well rotted vegetative material or animal manure, free from harmful chemicals, grass and weed growth to the organic content by mass noted in the soil test recommendations.

Imported topsoil
Particle size: Provide soil to the **Topsoil particle size table**.

Topsoil particle size table (% passing by mass)

AS sieve aperture to AS 1152	Soil textures		
	Fine	Medium	Coarse
2.36	100	100	100
1.18	90 – 100	95 – 100	95 – 100
0.60	75 – 100	75 – 100	70 – 90
0.30	57 – 90	55 – 85	30 – 46
0.15	45 – 70	38 – 55	10 – 22
0.075	35 – 55	25 – 35	5 – 10
0.002		2 – 15	2 – 8

Nutrient levels: Provide soil to the **Topsoil nutrient level table**.

Topsoil nutrient level table

Nutrient	Unit	Sufficiency range
Nitrate-N (NO_3)	mg/kg	> 25
Phosphate-P (PO_4) – P tolerant	mg/kg	43 - 63
Phosphate-P (PO_4) – P sensitive	mg/kg	< 28
Phosphate-P (PO_4) – P very sensitive	mg/kg	< 6
Potassium (K)	mg/kg	178 - 388
Sulphate-S (SO_4)	mg/kg	39 - 68
Calcium (Ca)	mg/kg	1200 - 2400
Magnesium (Mg)	mg/kg	134 - 289
Iron (Fe)	mg/kg	279 - 552
Manganese (Mn)	mg/kg	18 - 44
Zinc (Zn)	mg/kg	2.6 - 5.1
Copper (Cu)	mg/kg	4.5 - 6.3
Boron (B)	mg/kg	1.4 - 2.7
Method References pH in H_2O (1:5), pH in $CaCl_2$ (1:5) and Electrical Conductivity (EC) by Rayment & Higginson (1992) method 4A2, 4B2, 3A1 Soluble Nitrate-N by APHA 4500 Soluble Chloride by Rayment & Higginson (1992) modified method 5A2 Extractable P by Mehlich 3 – ICP Exchangeable cations – Ca, Mg, K, Na by Mehlich 3 – ICP Extractable S by Mehlich 3 – ICP Extractable trace elements (Fe, Mn, Zn, Cu, B) by Mehlich 3 - ICP		

Bushland restoration nutrient levels: Provide topsoil with nutrient levels related to the soils of the local natural bushland.

Site topsoil

General: In accordance with the soil test recommendations.

Soil blend: Stripped topsoil with ameliorants to AS 4419 clause 4.6.

2.2 SOIL MIX TYPE A

General: Provide soil mix type equal to Premium Garden Mix as supplied by Australian Native Landscapes.

2.3 SOIL MIX TYPE B

General: Provide soil mix type equal to Sand-Soil Blend 80-20 as supplied by Australian Native Landscapes.

2.4 SOIL MIX TURF

General: Provide soil mix type equal to Turf Underlay as supplied by Australian Native Landscapes.

2.5 STRUCTURAL SOIL

Types

General: Provide structural soil types to the **Structural soil type table**.

Structural soil type table

Type	Description	Fertiliser	Depth
Structural soil 20 mm	75% 20 mm crushed river gravel 25% filler soil of 1 part screeded dolomite to 1 part screeded sandy loam	Trace element mix: 300 g/m^3 Potassium nitrate: 500 g/m^3 Ammonium nitrate: 500 g/m^3	100 mm

Type	Description	Fertiliser	Depth
		Superphosphate: 500 g/m^3 Ion sulphate: 1.5 kg/m^3 8/9 month Controlled Release: 2 kg/m^3 Gypsum: 500 g/m^3 Magnesium sulphate: 400 g/m^3 Magrilime: 600 g/m^3	
Structural soil 40 mm	80% 40 mm basalt aggregate 20% filler soil of 1 part screeded dolomite to 1 part screeded sandy loam	Trace element mix: 300 g/m^3 Potassium nitrate: 500 g/m^3 Ammonium nitrate: 500 g/m^3 Superphosphate: 500 g/m^3 Ion sulphate: 1.5 kg/m^3 8/9 month Controlled Release: 2 kg/m^3 Gypsum: 500 g/m^3 Magnesium sulphate: 400 g/m^3 Magrilime: 600 g/m^3	Varies

3 EXECUTION

3.1 PREPARATION

Vegetative spoil

Spoil suitable for mulch or spreading for bushland restoration: Spread freshly harvested native plant biomass, free of weed propagules.

Unsuitable material: Remove vegetative spoil from site. Do not burn.

Embankment stabilisation

General: Where necessary to prevent erosion or soil movement, stabilise embankments.

Method: Either matting overlay or hydromulching.

Matting generally: Biodegradable fibre reinforced with lightweight polymer mesh. Provide lightweight material for seeding, medium or heavy weight material for planting.

Matting in high erosion zones: Flexible carbon black UV stabilised interwoven nylon mesh.

Matting installation: Sow before matting is installed, where sowing is required. Plant after matting is installed, where planting is required. Peg the matting into 300 x 300 mm anchor trenches at top and bottom, backfill the trenches with soil and compact.

Matting pegs: U-shape galvanized steel, at 1000 x 1000 mm intervals generally, 250 mm at overlaps.

3.2 ROCK WORK

Existing rock

General: Protect existing rock, rock shelves and rock outcrops from mechanical damage, surface defacement and other works.

Rock surfaces: Report damage or defacement occurring to any rock faces during the course of the Works.

Replacement: If restoration is not feasible repair the rock face with replaced rocks imported or taken from the site.

New rock work

General: Place rocks while ground formation work is being carried out. Provide site rock, otherwise provide imported rock.

Bury rock two thirds by volume or as appropriate for effective erosion control, with weathered faces exposed. Protect the weathered faces from damage.

Site rock: Stockpile for future placement and accessibility for lifting. Dispose of other rock off site.

Imported rock: Provide rock which has been selected before delivery.

3.3 EARTH MOUNDS

Construction

Placing: Place clean filling in layers approximately 150 mm thick compacted to 85% of the dry density ratio of the surrounding soil as determined by AS 1289.5.4.1. Minimise slumping and further internal packing down.

Edges: Construct changes in grade over a minimum width of 500 mm to smooth, gradual and rounded profiles with no distinct joint.

Existing trees: Maintain the natural ground level under the canopy.

Pipes, culverts and associated structures: Construct mounding to avoid unbalanced loading.

3.4 SUBSOIL

Ripping

General: Rip parallel to the final contours wherever possible. Do not rip when the subsoil is wet or plastic. Do not rip within the dripline of trees and shrubs to be retained.

Ripping depths: Rip the subsoil to the following typical depths:

- Compacted subsoil: 300 mm.
- Heavily compacted clay subsoil: 450 mm.

Planting beds

Excavated: Excavate to bring the subsoil to at least 300 mm below finished design levels. Shape the subsoil to fall to subsoil drains where applicable. Break up the subsoil to a further depth of 100 mm.

Unexcavated: Remove weeds, roots, builder's rubbish and other debris. Bring the planting bed to 75 mm below finished design levels.

Cultivation

Minimum depth: 150 mm, unless nominated on the design drawings.

Services and roots: Do not disturb services or tree roots and if necessary cultivate these areas by hand.

Cultivation: Thoroughly mix in materials required to be incorporated into the subsoil. Cultivate manually within 300 mm of paths or structures. Remove stones exceeding 25 mm, clods of earth exceeding 50 mm, and weeds, rubbish or other deleterious material brought to the surface during cultivation. Trim the surface to design levels after cultivation.

Additives

General: Apply additives after ripping or cultivation and incorporate into the upper 100 mm layer of the subsoil, in accordance with the soil test recommendations.

Gypsum: Incorporate at the rate of 0.25 kg/m^2.

Herbicide: Before spreading topsoil apply and herbicide treatment, in accordance with the soil test recommendations.

3.5 TOPSOIL

Site topsoil preparation

Screeding: By a power hydraulic screen capable of handling 100 tonne per hour, with sieves grading from 20 mm to 15 mm.

Waste: Remove from site all clay lumps, balled compacted particles greater than 20 mm, stones and trash foreign to the normal composition of soil.

Contamination: If diesel oil, cement or other phytotoxic material has been spilt on the site topsoil, excavate the contaminated soil and dispose of it off the site.

Admixtures: During the screening process add the following:

- 15% by weight coarse sand minimum particle size 0.2 mm.
- Ameliorants if recommended in the soil tests.

Additives program: 8 weeks before stolonizing or turfing.

Placing topsoil

Site topsoil: Do not incorporate site topsoil into the works until soil testing certification has been approved. Remove unauthorised material from the site.

General: Spread the topsoil on the prepared subsoil and grade evenly, making the necessary allowances to permit the following:

- Required finished levels and contours may be achieved after light compaction.
- Grassed areas may be finished flush with adjacent hard surfaces such as kerbs, paths and mowing strips.

Spreading: On steep batters, if using a chain drag, ensure there is no danger of batter disturbance.

Finishing: Feather edges into adjoining undisturbed ground.

Consolidation

General: Compact lightly and uniformly in 150 mm layers. Avoid differential subsidence and excess compaction and produce a finished topsoil surface which has the following characteristics:

- Finished to design levels.
- Smooth and free from stones or lumps of soil.
- Graded to drain freely, without ponding, to catchment points.
- Graded evenly into adjoining ground surfaces.
- Ready for planting.

Topsoil depths

General: Unless nominated on the design drawings, spread topsoil to the following typical depths:

- Excavated planting areas: If using organic mulch, 225 mm. If using gravel mulch, 250 mm.
- Irrigated grassed areas generally: 150 mm.
- Irrigated grassed areas, heavy use (e.g. playing fields, playgrounds, public parks): 200 mm.
- Non-irrigated grass areas: 100 mm.
- Earth mounds:
  . Mass planted surfaces: 300 mm.
  . Grassed surfaces: 100 mm.
- Top dressing: 10 mm.

Surplus topsoil

General: Dispose of surplus topsoil off site.

3.6 STRUCTURAL SOIL

Preparation

Existing soil: Remove.

Subsoil: Break up the surface and shape to drains. Remove rock.

Drainage: To the Engineering documentation.

Construction

Spreading: Maintain a self draining surface.

Compaction: To the Engineering documentation.

Protection: Limit the size of compaction equipment or compact by hand to prevent damage.

Moisture content: Adjust the moisture content at the time of works to 12.5% of the optimum moisture content to AS 1289.5.4.1.

Contaminated structural soil: Excavate and dispose off site.

Surplus structural soil: Remove.

0252 LANDSCAPE – SOFT SURFACES

1 GENERAL

1.1 RESPONSIBILITIES

General
General: Provide soft surfaces for landscaping as documented.

1.2 CROSS REFERENCES

General
Requirement: Conform to the following:
- *General requirements*.
- *Landscape – soils.*
- *Landscape – irrigation.*
- *Landscape – establishment.*
- *Landscape – maintenance.*

1.3 INSPECTION

Notice
Inspection: Give notice so inspection may be made of the following
- Clearing completed.
- Setting out completed.
- Grassing bed prepared before turfing, seeding, or temporary grassing.
- Grassing or turfing completed.

1.4 SUBMISSIONS

Samples
General: Submit representative samples of each material, packed to prevent contamination and labelled to indicate source and content.

Suppliers
Statements: Submit statements from suppliers, giving the following, where applicable:
- Particulars of the supplier's experience in the required type of work.
- Production capacity for material of the required type and quantity.
- Lead times for delivery of the material to the site.

Materials
Supplier's data: Submit supplier's data including the following:
- Material source of supply.

Execution
Program: Submit a work program in the form of a bar chart, for the landscape works.

Maintenance program: Submit a proposed planting maintenance program.

Material storage on site: Submit proposal.

2 PRODUCTS

2.1 GRASS

Seed
Mixtures: Provide seed mixtures which are thoroughly pre-mixed with a bulking material such as safflower meal. Deliver to the site in bags marked to show weight, seed species and supplier's name. Provide fresh, clean, uncoated new seed. Do not provide wet, mouldy, or otherwise impaired seed.

Purity (minimum): 98%.

Germination viability (minimum): 86%.

Age (maximum) from date of harvest: 2 years.

Turf

Supplier: Obtain turf from a specialist grower of cultivated turf.

Quality: Provide turf of even thickness, free from weeds and other foreign matter.

Grass reinforcing

Grass pavers: Lightweight interlocking plastic cellular paving system capable of sustaining pedestrian and occasional vehicular traffic including emergency vehicles.

2.2 FERTILISER

Fertiliser

General: Provide proprietary fertilisers, delivered to the site in sealed bags marked to show manufacturer or vendor, weight, fertiliser type, N:P:K ratio, recommended uses and application rates.

3 EXECUTION

3.1 PREPARATION

Weed eradication

Herbicide: Eradicate weeds using environmentally acceptable methods, such as a non-residual glyphosate herbicide in any of its registered formulae, at the recommended maximum rate.

Manual weeding: Regularly remove, by hand, rubbish and weed growth throughout grassed, planted and mulched areas. Remove weed growth from an area 750 mm diameter around the base of the trees in grassed areas. Continue eradication throughout the course of the works and during the planting establishment period.

Vegetative spoil

Disposal: Remove vegetative spoil from site. Do not burn.

3.2 TURFING

Supply

Elapsed time: Deliver the turf within 24 hours of cutting, and lay it within 36 hours of cutting. Prevent it from drying out between cutting and laying. If it is not laid within 36 hours of cutting, roll it out on a flat surface with the grass up, and water as necessary to maintain a good condition.

Laying

General: Lay the turf in the following manner:

- In stretcher pattern with the joints staggered and close butted.
- Parallel with the long sides of level areas, and with contours on slopes.
- To finish flush, after tamping, with adjacent finished surfaces of ground, paving edging, or grass seeded areas.

Strip turf laying: Close butt the end joints and space the strips 300 mm apart. Apply a layer of top dressing between the strips of turf. Finish with an even surface.

Tamping

General: Lightly tamp to an even surface immediately after laying. Do not use a roller.

Pegging

Stabilising: On steep slopes peg the turf to prevent downslope movement. Remove the pegs when the turf is established.

Fertilising

General: Mix the fertiliser thoroughly into the topsoil before placing the turf. Apply lawn fertiliser at the completion of the first and last mowings, and at other times as required to maintain healthy grass cover.

Watering

General: Water immediately after laying until the topsoil is moistened to its full depth. Continue watering to maintain moisture to this depth.

Mowing

Height: Mow to maintain the grass height within the required range. Do not remove more than one third of the grass height at any one time. Carry out the last mowing within 7 days before the end of the planting establishment period. Remove grass clippings from the site after each mowing.

Turfing
General: Lay turfing equal to Sir Walter DNA Certified Buffalo.

Maintenance
General: Maintain turfed areas until the attainment of a dense continuous sward of healthy grass over the whole turfed area, evenly green and of a consistent height.

Failed turf: Lift failed turf and relay with new turf.

Levels: Where levels have deviated from the design levels after placing and watering, lift turf and regrade topsoil to achieve design levels.

Top dressing
General: When the turf is established mow, remove cuttings and lightly top dress to a depth of 10 mm. Rub the dressing well into the joints and correct any unevenness in the turf surface.

3.3 GRASS REINFORCING

Installation
Preparation: Excavate to required levels and compact subgrade.

Base course: Place and compact either of the following:

- Non calcareous free draining washed sand comprising 80% 0.1 mm to 1.0 mm diameter.
- 1.0 mm to 5.0 mm gravel aggregate.

Base course depth:

- Pedestrian walkways: 100 mm.
- Passenger vehicles: 150 mm.
- Heavy vehicles: 250 mm.

Growing media: Place and interlock grass pavers, and spread an 80% sand and 20% organic sandy soil mix.

Height of growing media over the pavers:

- Turf: 5 mm.
- Hydroseeded: 15 mm.

Protection: Exclude traffic until the root system becomes established and anchored to the base course.

0253 LANDSCAPE – PLANTING

1 GENERAL

1.1 RESPONSIBILITIES

General

General: Provide planting as documented.

1.2 CROSS REFERENCES

General

Requirement: Conform to the following:

- *General requirements*.
- *Landscape – soils.*
- *Irrigation.*
- *Landscape – plant procurement.*
- *Landscape – establishment.*
- *Landscape – maintenance.*

1.3 INSPECTION

Notice

Inspection: Give notice so inspection may be made of the following:

- Setting out completed.
- Plant holes excavated and prepared for planting.
- Plant material set out before planting.
- Planting, staking and tying completed.
- Completion of planting establishment work.

1.4 SUBMISSIONS

Materials

Supplier's data: Submit supplier's data including the following:

- Material source of supply.

Compost: Submit a certificate of proof of compost pH value.

Execution

Program: Submit a work program in the form of a bar chart, for the landscape works.

Maintenance program: Submit a proposed planting maintenance program.

Planting machine: If a planting machine is to be used as an alternative to hand planting, submit proposal.

Spraying: Submit proposal.

Plants – open rooted stock: If open rooted stock is to be used, submit proposal.

Material site storage: Submit proposal.

Samples

General: Submit representative samples of each material, packed to prevent contamination and labelled to indicate source and content.

Bulk materials: Submit a 5 kg sample of each type specified. Submit bulk material samples, with required test results, at least 5 working days before bulk deliveries.

2 PRODUCTS

2.1 SOIL CONDITIONING COMPOST AND FERTILISER

Compost

General: Provide mature soil conditioning compost free from harmful chemicals, grass and weed growth, fit for purpose and suitable for establishment and longer term survival of the nominated plant material. Apply at an application rate that accounts for the immediate fertilizer equivalence of the compost as part of the overall fertilizer management schedule.

Standard: Particle size as a soil conditioner, pH, physical and chemical contaminants to AS 4454.

Soil conditioning properties

Wettability: ≤ 2 to AS 3743 Table 2.1 as tested to Appendix C.

Total water holding capacity: ≥ 40 to AS 3743 Table 2.1 as tested to Appendix B.

Nitrogen draw down index: ≥ 0.7 to AS 3743 Table 2.1 as tested to Appendix E.

Fertiliser equivalence properties

Standard: To the methods specified in Raymond and Higginson 1992, *Australian Laboratory Handbook of Soil and Water Chemical Methods* for nitrate N, total N or total Kjeldahl N, total P and bicarbonate-extractable P, and extractable K.

Fertiliser

Delivery: Provide proprietary fertilisers, delivered to the site in sealed bags marked to show manufacturer or vendor, weight, fertiliser type, N:P:K ratio, recommended uses and application rates, fit for purpose and suitable for establishment and longer term survival of the nominated plant material.

2.2 MULCH

Mulch

General: Provide mulch which is free of deleterious and extraneous matter such as soil, weeds and sticks. Do not include fine mulch.

Standard:

- Particle size, physical and chemical contaminants: To AS 4454.
- pH, electrical conductivity, ammonium, chlorine and other nutrients: To AS 3743.

Organic mulches: Free of stones.

Mulch material: Brush chippings and leaf litter recovered from site clearing, if available; otherwise, pine bark.

Organic mulch types

Brush chippings and leaf litter: Vegetative material processed through a chipper to pieces not larger than 75 x 50 x 15 mm as follows:

- Material permitted: Leaf matter and tree loppings from Eucalyptus, Tristania and Pinus species.
- Material not permitted: Leaf matter and tree loppings from privet, camphor laurel, coral tree, poplar, willow, and noxious weeds.

Pine bark: From mature trees, graded in size from 50 x 50 x 25 mm to 25 x 15 x 15 mm, free from wood slivers.

Pine flake: Pinus species sapwood slivers of size range 250 x 25 mm to 30 x 3 mm, including fragments of pine bark.

Straw: Cereal straw, wood fibre, or other suitable vegetative material (but not meadow hay) free from weeds and seeds, applied in conjunction with a bitumen emulsion or polymer binder.

Inorganic mulch types

Washed river pebble: Uniform size or graded material in the size range 6 – 10 mm.

Decomposed granite gravel: Uniform size or graded material in the size range 5 – 20 mm, of uniform colour and low plasticity. Keep clear of plant stems.

Crushed quartz: Uniform size or graded material in the size range 5 – 20 mm, of uniform colour.

Marble chip gravel: Uniform size or graded material in the size range 5 – 20 mm, of uniform colour.

Slate: Plum slate slivers in the size range 5 – 25 mm.

Shale: Uniform size or graded material, no particles smaller than 0.1 mm diameter.

Scoria: Uniform size or graded material.

2.3 MULCH TYPE

General: Provide mulch equal to Droughtmaster Mulch as supplied by Australian Native Landscapes.

3 EXECUTION

3.1 PREPARATION

Weed eradication

Herbicide: Eradicate weeds using environmentally acceptable methods, such as a non-residual glyphosate herbicide in any of its registered formulae, at the recommended maximum rate.

Removal: Regularly remove, by hand, rubbish and weed growth throughout grassed, planted and mulched areas. Remove weed growth from an area 750 mm diameter around the base of the trees in grassed areas. Continue eradication throughout the course of the works and during the planting establishment period.

Vegetative spoil

Disposal: Remove vegetative spoil from site. Do not burn.

3.2 PLANTING

Individual plantings in grassed areas

Method: Excavate a hole to twice the diameter of the root ball and at least 100 mm deeper than the root ball. Break up the base of the hole to a further depth of 100 mm, and loosen compacted sides of the hole to prevent confinement of root growth.

Locations

General: If it appears necessary to vary plant locations and spacings to avoid service lines, or to cover the area uniformly, or for other reasons, give notice.

Planting conditions

Weather: Do not plant in unsuitable weather conditions such as extreme heat, cold, wind or rain. In other than sandy soils, suspend excavation when the soil is wet, or during frost periods.

Watering

Timing: Thoroughly water the plants before planting, immediately after planting, and as required to maintain growth rates free of stress.

Placing

Method: Remove the plant from the container with minimum disturbance to the root ball. Root prune to ensure all circling roots have been either severed or aligned radially into the surrounding soil. Ensure that the root ball is moist and place it in its final position, in the centre of the hole and plumb, and with the top soil level of the plant root ball level with the finished surface of the surrounding soil. Compact lightly so as to minimise subsidence without compacting the backfill. Avoid mixing mulch with topsoil.

Fertilising

Pellets: In planting beds and individual plantings, place fertiliser pellets around the plants at the time of planting.

Backfilling

General: Backfill with topsoil mixture. Lightly tamp and water to eliminate air pockets. Ensure that topsoil is not placed over the top of the root ball, so that the plant stem remains the same height above ground as it was in the container.

Watering basins for plants in grass

Method: Except in irrigated grassed areas and normally moist areas, construct a watering basin around the base of each individual plant, consisting of a raised ring of soil capable of holding at least 10 L.

3.3 MULCHING

Placing mulch

General: Place mulch to the required depth, clear of plant stems, and rake to an even surface flush with the surrounding finished levels. Spread and roll mulch so that after settling, or after rolling, it is smooth and evenly graded between design surface levels sloped towards the base of plant stems in plantation beds, and not closer to the stem than 50 mm in the case of gravel mulches.

In mass planted areas: Place after the preparation of the planting bed but before planting and other work.

In smaller areas (e.g. planter boxes): Place after the preparation of the planting bed, planting and other work.

Extent: To surrounds of plants planted in riplines and grass areas, provide mulch to 750 mm diameter.

Depths: Spread organic mulch to a depth of 75 mm, and gravel mulch to a depth of 50 mm.

3.4 SPRAYING

Notice

General: Immediately give notice of evidence of insect attack or disease amongst plant material.

Spraying

Product: Where required, spray with insecticide, fungicide or both.

3.5 STAKES AND TIES

Stakes

Material: Hardwood, straight, free from knots or twists, pointed at one end.

Installation: Drive stakes into the ground at least one third of their length, avoiding damage to the root system.

Stake sizes:

- For plants ≥ 2.5 m high: Three 50 x 50 x 2400 mm stakes per plant.
- For plants 1 – 2.5 m high: Two 50 x 50 x 1800 mm stakes per plant.
- For plants < 1 m high: One 38 x 38 x 1200 mm stake per plant.

Ties

General: Provide ties fixed securely to the stakes, one tie at half the height of the main stem, others as necessary to stabilise the plant. Attach ties loosely.

Tie types:

- For plants ≥ 2.5 m high: Two strands of 2.5 mm galvanized wire neatly twisted together, passed through reinforced rubber or plastic hose, and installed around stake and stem in a figure of eight pattern.
- For plants < 2.5 m high: 50 mm hessian webbing stapled to the stake.

Marker stakes

Material: Timber offcuts 25 x 25 x 1200 mm. Dip the top 200 mm in white paint.

Installation: Drive firmly into the ground at least 300 mm from the plant. Do not tie to the plant.

Location of marker stakes:

- Trees in grass: Mark each tree.
- Ripline planting areas: Mark each ripline at every fifth plant along the line.

Trunk protection

Collar guards: 200 mm length of 100 mm diameter agricultural pipe split lengthways.

3.6 COMPLETION

Product certification

Certification: Submit the supplier’s written statement certifying that plants are true to the required species and type and free from diseases, pests and weeds.

Maintenance manual

General: Submit recommendations for maintenance of plants.

Cleaning

Stakes and ties: Remove those no longer required at the end of the planting establishment period.

Temporary fences: Remove temporary protective fences at the end of the planting establishment period.

0254 IRRIGATION

1 GENERAL

1.1 RESPONSIBILITIES

General

General: Provide automatically controlled fixed irrigation systems as follows:

- Achieve the documented flow rates over the area to be irrigated.
- Meet statutory requirements for backflow prevention.

Location: All landscape areas, including individual tree plantings, mass garden beds, lawn areas.

1.2 CROSS REFERENCES

General

Requirement: Conform to the following:

- *General requirements*.
- *Landscape – soft surfaces.*
- *Landscape – planting.*
- *Landscape – establishment.*
- *Landscape – maintenance.*
- Engineering documentation.

1.3 STANDARDS

Water supply

General: To AS/NZS 3500.1.

1.4 INSPECTION

Notice

Inspection: Give notice so that inspection may be made at the following stages:

- Excavated surfaces ready for installation.
- Concealed or underground services ready for backfilling.

1.5 SUBMISSIONS

Shop drawings

General: Submit drawings and schedules showing the layout and details of the system, including the following:

- Micro-irrigation stake layout.
- Irrigation controller cabinets.

2 PRODUCTS

2.1 AUTOMATIC CONTROL VALVES

General

Type: 24 V solenoid actuated hydraulic valves with flow control and a maximum operating pressure rating ≥ 1 MPa.

Construction: Stainless steel bonnet holding down bolts and internal metal parts of stainless steel, able to be serviced without removal from the line.

Isolating valve: Provide a gate valve of the same size immediately upstream of each automatic control valve.

Housing: House both valves in the same valve box.

2.2 FIXED LOCATION SYSTEMS

Heads

Performance: Provide heads that:

- Maintain a preset arc of throw.
- Are adjustable for radius during watering operations
- Are appropriately vandal-resistant.

Pop-up type heads:

- Type: Designed to rise > 50 mm out of their housings under supply pressure.
- Construction: Provide wiper seals, stainless steel return springs and removable internal filters.
- Playing fields: Provide covers designed and constructed to prevent injury to players.

Sprinkler heads:

- Type: Gear driven and spray sprinklers which have matched precipitation rates for the various areas of throw.
- Flow rate: Adjustable down to zero.

Impact sprinkler heads: Bronze bodies in high impact plastic cases with drainage holes.

Valves

Check valves: If a rotating head is more than 300 mm below the highest head on the same automatic valve, fit an internal or external anti-drain check valves to prevent low head drainage.

Pressure regulating valves: At off-take points provide pressure regulating valves as follows:

- Adjustable between 100 and 700 kPa.
- Complete with 800 µm filter sized to suit the flow and installed immediately upstream from the pressure regulating valve
- Installed with gate valves upstream from the filter and downstream from the pressure regulating valve.
- Fitted for backflow prevention.
- Mount the assembly in an accessible position in a valve box, access pit or adjacent building.

Soil moisture sensors

Type: Fixed ceramic moisture sensors.

Connection: To the irrigation controller via moisture control units.

Irrigation controllers

Construction: Provide automatic controllers that are easily programmed and include the following:

- Manual cycle and individual control valve operation.
- Manual on/off operation of irrigation without loss of program.
- ≥ 4 on/off cycles per day.
- Day omit (e.g. every second day, third day etc.).
- 240 V input and 24 V output capable of operating 2 control valves simultaneously.
- ≥ 24 hour battery program backup.
- Power surge protection.
- Cabinet: In external locations mount in a lockable cabinet minimum IP 54 to AS 60529.
- Electrical connection: Provide 240 V supply and isolating switch at the controller.

2.3 MICRO-IRRIGATION SYSTEMS

Components

Polyethylene micro-irrigation pipe:

Fittings: Barbed fittings rated for the pressure class of the pipe, fastened with ratchet type clamps.

Valve boxes: In each box provide:

- Automatic control valve.
- Isolating valve.
- Filter: 200 µm.
- Pressure reducing valve with 170 kPa outlet pressure.

2.4 DRIP IRRIGATION SYSTEMS

Integrated drip line systems
Construction: Polyethylene tubing with integral drippers inserted into the tube during manufacture.

Discrete drip emitter systems
Tubing: Polyethylene micro-irrigation pipe.

Drippers: Turbulent flow types, easily dismantled for cleaning.

Emitters
If the difference in elevation between the control box and all emitters is:
- < 1.5 m: Pressure compensated or non-pressure compensated type.
- ≥ 1.5 m: Pressure compensated only.

Fittings
Type: Barbed fittings rated for the pressure class of the pipe, fastened with ratchet type clamps.

Valve boxes
- In each box provide:
- Automated control valve.
- Isolating valve.
- Filter: 100 µm.
- Pressure reducing valve with 170 kPa outlet pressure.

2.5 VALVE BOXES

General
Construction: UV-resistant high impact plastic with high impact snap lock plastic cover.

Location: Support on bricks at each side. Install with top:
- Within playing fields: 150 mm below the surface.
- Other locations: At finished ground level.

3 EXECUTION

3.1 FIXED LOCATION SYSTEMS

Control wiring
General: Connect the automatic control valves and soil moisture sensors to the controller as follows:
- Cable type: Double insulated.
- Cable runs: Underground and laid alongside piping where possible.
- Connectors: Waterproof.
- Jointing: loop cables and join only at valves, sensors and controllers.
- Movement provision: Provide expansion loops at changes of direction and at joints.

Quick coupling
General: Provide DN 20 double lugged bronze quick coupling valves with neoprene seats mounted on DN 20 copper risers offset at least 150 mm from the supply pipe. Install in valve boxes.

Heads
Impact sprinkler heads: Provide granular fill for at least 75 mm around the base of the case.

Risers: Mount as follows:
- Above ground heads: Mount on fixed risers.
- Galvanized steel risers: Set in 300 x 300 x 200 mm deep concrete blocks.
- In-ground heads: Mount on reticulated risers.

3.2 MICRO-IRRIGATION SYSTEMS

General
Connections: Connect micro-tube laterals with proprietary push in or screw in fittings.

Drippers: Connect directly into piping or provide appropriately sized micro-tubes

Microsprays: Mount microsprays 300 mm above ground on stakes and connect to the piping with appropriately sized micro-tubes.

Piping: Lay polyethylene pipe on finished ground surface under planting bed mulch and anchor at 1.5 m maximum intervals with U-shaped stakes.

3.3 DRIP IRRIGATION SYSTEMS

General

Discrete drippers: Connect directly into piping or provide appropriately sized micro-tubes.

Piping: Lay polyethylene pipe on finished ground surface under planting bed mulch and anchor at 1.5 m maximum intervals with U-shaped stakes.

Air release valves: Provide at the highest point in each section to drain the system when flow stops.

3.4 COMPLETION

General

On completion:

- Flush system thoroughly, check heads, sprays and drippers and clean if blocked.
- Clean strainers.
- Adjust for even distribution with no dry areas.

0255 LANDSCAPE – PLANT PROCUREMENT

1 GENERAL

1.1 RESPONSIBILITIES

General

Requirement: Provide plants that have been grown to a standard that allows them to establish rapidly and grow to maturity.

Maintenance: Encourage and maintain healthy growth for the duration of the contract.

Program: Provide a suitable irrigation, pruning, fertiliser and monitoring program for all plant materials held by the supplier. Take any other precautions required to safeguard the health and well being of all plant materials before and including their delivery to site.

Principal supplied: Arrange delivery and transportation of principal supplied plant stock to site.

1.2 CROSS REFERENCES

General

Requirement: Conform to the following:

- *General requirements*.
- *Landscape – planting.*

1.3 STANDARD

General

Tree supply: Follow the guidance given in NATSPEC Guide*: Specifying Trees – a guide to assessment of tree quality* (Clark R. 2003).

1.4 INTERPRETATION

Definitions

General: For the purposes of this worksection the definitions given below apply:

- Calliper: The stem or trunk diameter at a nominated point. Generally measured at 300 mm above ground.
- Destructive inspection. The washing away of all soil from a rootball to allow inspection of rootball development.
- External inspection: Tree inspection without washing away of soil from the rootball which assesses the following:
  - The tree's ability to be self-supporting.
  - Its balance.
  - Its root development.
- Investigative inspection: Any method of root inspection that involves the washing away of all or portions of the soil from the rootball to expose a section or all the roots.
- Large trees: Trees grown in containers ≥ 20 L, and ex-ground trees of size index ≥ 35.
- Partial inspection: A method of exposing a section of a root system to enable inspection of root development by washing the soil away in a wedge-shaped section from the stem to the extremity of the rootball. This soil can be gently replaced so the tree is not damaged.
- Size index: Product of height (m) x calliper (mm).
- Small trees or shrubs: Trees or shrubs grown in containers < 20 L (other than tubes or plant cells), and ex-ground trees of size index < 35.
- Tubes or plant cells: Trees or shrubs grown in small containers or cells in trays with a height:diameter ratio > 3:2, typically < 0.75 L.

1.5 CONTINGENCY PLANT MATERIAL

Replacement

Provision: Anticipate replacement of failures on site.

Amount: 15% above any normal allowances made in the nursery trade for anticipated losses in the course of propagation and the growing on of plant materials.

Delivery: Supply to the site upon 7 days notice to the supplier.

Holding: Until the contingency plant material is delivered to site or until the expiry of twelve months from the date of completion of the works, whichever is the earlier. The supplier is not entitled to holding costs for contingency plant material.

Surplus plant material: To remain the property of the supplier.

1.6 PRECOMPLETION TESTS

Production tests

External tree inspection:

- Frequency: Inspect trees before shipment.
- Inspector: Supplier.
- Sampling: To the **External tree inspection sampling table** for each batch of trees. Select sample trees at evenly distributed intervals within each batch.

External tree inspection sampling table

Number of trees per batch	Number of trees to sample
0 – 20	4
21 – 50	8
51 – 100	15
101 – 500	15 for the first 100 + 5% of the balance of the order
501 – 2000	35 for the first 500 + 2% of the balance of the order
2001+	65 for the first 2000 + 1% of the balance of the order

Investigative tree inspection:

- Frequency: Inspect trees before shipment.
- Inspector: Qualified person authorised by the contract administrator.
- Destructive inspection: Use for trees with rootballs/containers ≤ 200 mm.
- Allowance: Allow for sample trees in addition to quantity ordered.
- Partial inspection: Use for trees with rootballs/containers > 200 mm.
- Sampling: To the **Investigative tree inspection sampling table** for each batch of trees. Select sample trees at evenly distributed intervals throughout each batch.

Investigative tree inspection sampling table

Number of trees per batch	Number of trees to sample
0 – 20	1
21 – 50	2
51 – 100	4
101 – 500	4 for the first 100 + 2% of balance of order
501 – 2000	12 for first 500 + 1% of balance of order
2001+	27 for the first 2000 + 0.5% of balance of order

1.7 SUBMISSIONS

Plant provenance

Locality: Provide written certification that all plant material has been grown from locally provenanced stock. If this is not achievable give notice.

Species: Provide written certification that all plant material is true to the required species and type.

Test results

General: Complete and return the **Tree inspection form** for each batch inspected.

Rejection: Non-compliance may lead to rejection of the entire batch.

Corrective action: Comply with corrective action procedures for each order as instructed.

Substitution: If non-complying trees are proposed, submit a proposal in writing.

Authentication: Supply a copy of the written approval of substitution with any non-complying trees.

Forward order contracts

Reports: Complete regular reports using the pro forma **Tree inspection form** provided in **Selections**. Include checks against specification requirements.

- Photographs: Provide current colour copies with date verification.
- Inspection: Complete and return the attached pro-forma **Tree inspection form** before despatch of every batch, and at the following frequencies:
  . Inspections: At 3 monthly intervals.
- Reports: At time of inspections.

Photographic examples

Requirement: Submit photographic examples as follows:

- All palm species.
- 100, 200, 400 L plant species.
- Specimen plant species.

Program: Within fourteen (14) days of the date of contract.

Clarity: Sufficient to be able to ascertain the species, size and quality of a single specimen of the subject plant.

Identification: Provide photographs as follows:

- In colour.
- With a clearly identifiable scale reference located in the same plane as the plant stem or trunk.
- Labelled with plant species name.

Progress reports

Content: A detailed resume of the quantities, growth, general health and geographic location of the complete inventory of plant material for the works.

Purpose: To evaluate progress payments under the general conditions of contract.

Program: Monthly.

Accreditation

Submit evidence of accreditation.

1.8 INSPECTION

Notice – off site

Inspection: Give notice so that inspection may be made of the following:

- Immediately prior to the acceptance of tender to view representative samples of all stock scheduled.
- After eight weeks of the growing on period.
- At 80% completion of stocking of plant material.
- At completion of stocking of plant material, deemed to be as close as practical to 100% in terms of species and numbers.
- At the date of commencement of delivery.
- At a time to be determined to assess potting on procedures, if necessary.

2 PRODUCTS

2.1 BALANCE

Small trees and shrubs

Conformance at inspection: To balance (small plants) assessment requirements.

Balance (small plants) assessment requirements:

- Tubes or plant cells: Height above soil level must be between 1.5 and 2.5 times the height of the tube or plant cell.

- Trees and shrubs in containers < 20 L (other than tubes or plant cells) or ex-ground trees of size index < 35 (e.g. 1.4 m high x 25 mm calliper); height must fall within the range indicated for the container size in the Small container-grown plant table.
- Containers/rootballs (other than tubes or plant cells) must remain flat on the ground when the stem, held at 80% of height above ground, is deflected 30º from the vertical, side to side.

Exempt: Species that naturally produce hard inflexible wood in the early stages of their development.

Small container-grown plant table

Container size or minimum rootball diameter	**Height range (m)**	
	Thin-stemmed species	**Thick-stemmed species**
Tubes or plant cells	Height between 1.5 and 2.5 x the height of the container	
150 mm (1.8 L)	0.4 – 0.6	0.3 – 0.5
170 mm (2.6 L)	0.5 – 0.7	0.4 – 0.6
200 mm pot (4 L)	0.7 – 0.9	0.6 – 0.8
200 mm bag (5 L)	0.8 – 1.0	0.7 – 0.9
250 mm (8 L)	1.0 – 1.2	0.8 – 1.0
300 mm (15 L)	1.2 – 1.5	1.0 – 1.2

Large trees

Conformance at inspection: To balance (large trees) assessment requirements.

Balance (large trees) assessment requirements:

- For trees grown in containers ≥ 20 L, the size index must lie within the range for the nominal container size shown in the **Common container volumes table**.
- Ex-ground trees with a size index ≥ 35 (e.g. 1.4 m high x 25 mm calliper) must have rootball diameters ≥ the minimum rootball diameters shown in the **Ex-ground trees table**.

Common container volumes table

Size index	**Nominal container volume (L)**	**Size index**	**Nominal container volume (L)**
26-33	20	371-480	450
32-41	25	412-518	500
45-58	35	453-587	550
57-74	45	495-640	600
77-99	60	533-716	700
83-107	75	632-818	800
111-143	100	711-921	900
154-200	150	791-1023	1000
194-251	200	842-1089	1100
227-314	250	918-1188	1200
273-353	300	1148-1485	1500
289-373	350	1530-1980	2000
330-427	400	1913-2475	2500

Ex-ground trees table

Size index	**Minimum rootball diameter (mm)**	**Size index**	**Minimum rootball diameter (mm)**
36–55	350	341–383	850
56–72	400	384–429	900
73–106	450	430–530	1000
107–131	500	531–642	1100

Size index	Minimum rootball diameter (mm)	Size index	Minimum rootball diameter (mm)
132–156	550	643–732	1200
157–173	600	733–859	1300
174–228	650	860–1144	1500
229–249	700	1145–1507	1750
250–299	750	1508–1968	2000
300–340	800	1969–3075	2500

Photographs: Provide current colour copies with date verification.

2.2 GENERAL QUALITIES

Labelling

General: Clearly label individual plants and batches.

- Label type: To withstand transit without erasure or misplacement.

Health and vigour

Health: Supply plants with foliage size, texture and colour at time of delivery consistent with the size, texture and colour shown in healthy specimens of the nominated species.

Vigour: Supply plants with extension growth consistent with that exhibited in vigorous specimens of the species nominated.

Damage: Supply plants free from damage and from restricted habit due to growth in nursery rows.

Stress: Supply plants free from stress resulting from inadequate watering, excessive shade or excessive sunlight experienced at any time during their development.

Site environment: Supply plants that have been grown and hardened off to suit the conditions that could reasonably be anticipated to exist on site at the time of delivery.

Root development

Containers: Grow plants in their final containers for the following periods:

- Plants < 25 l size: > 6 weeks.
- Plants > 25 l size: > 12 weeks.

Freedom from pests and disease

Pests and disease: Supply plants with foliage free from attack by pests or disease.

Native species with a history of attack by native pests: Restrict plant supply to those with evidence of previous attack to < 15% of the foliage and ensure absence of actively feeding insects.

2.3 BELOW-GROUND QUALITIES – PLANTS

Root system

Requirement: Supply plant material with the root system:

- Well proportioned in relation to the size of the plant material.
- Conducive to successful transplantation.
- Free of any indication of having been restricted or damaged.

Root inspection: If inspection is by the removal of soil test as follows:

- For > 100 samples: Inspect 1%.
- For < 100 samples: Inspect 1 sample.

Sample plants: Replace.

Rejection: Root bound stock.

2.4 ABOVE-GROUND QUALITIES - TREES

Supply

Supply trees that:

- Are free from injury.
- Are self-supporting.

- Have the calliper at any given point on the stem greater than the calliper at any higher point on the stem.

Pruning

Clean stem height: < 40% of total tree height.

Pruning wounds

Extent: Restrict fresh (i.e. recent, non-calloused pruning wounds) to < 20% of total tree height.

Type: Ensure a clean-cut at the branch collar.

Diameter of wound: < 50% of the calliper immediately above the point of pruning.

Apical dominance

Species with an excurrent form: Supply trees with a defined central leader and the apical bud intact.

Crown symmetry

Crown distribution: Difference on opposite sides of the stem axis < 20%.

Stem structure

Species with excurrent form: Supply trees with a single stem roughly in the centre of the tree with any deviation from vertical < 15º.

Species with decurrent form: Supply trees where the central stem is not divided at any point lower than the clean stem height nominated, and that the stem junction at the point of division is sound.

All species: Ensure that branch diameter is less than or equal to one-half of the calliper immediately above the branch junction.

Included bark

General: Supply trees where the branch/stem bark ridges at junctions between stems and branches and between co-dominant stems are convex, except for species prone to include bark that are known to remain strong.

Trunk position

General: Supply trees with the distance from the centre of the trunk to the extremity of the rootball not varying by > 10%.

Compatibility of graft unions

General: Supply trees where the union between the scion and rootstock is sound for the entire perimeter of the graft, and the diameter of the scion immediately above the graft is equal to the diameter of the rootstock immediately below the graft (± 20%).

Indication of north

Trees in containers > 100 L or of size index > 140: Indicate the northerly aspect during growth in the nursery to withstand transit without erasure or misplacement.

2.5 BELOW-GROUND QUALITIES - TREES

Root division

Trees in containers ≤ 45 L or ex-ground trees with a size index ≤ 70: Primary division of roots at < 100 mm intervals.

Trees in containers > 45 L or ex-ground trees with a size index > 70: Primary division of roots within the outer 50% of the rootball at < 100 mm intervals.

Root direction

General: Ensure that roots, from the point of initiation, generally grow in an outwards (radial) or downwards direction, and that any deviation from the established direction < 45º.

Trees with a calliper at ground level < 40 mm: Ensure that the diameter of any nonconforming roots at the extremity of the rootball < 25% of the calliper.

Trees with a calliper at ground level ≥ 40 mm: Ensure that the diameter of any nonconforming roots at the extremity of the rootball < 10 mm.

Rootball occupancy

Soil retention: On shaking or handling the unsupported rootball at least 90% of the soil volume to remain intact.

Rootball depth

Rootball depth assessment for containers/rootballs ≥ 45 L or larger:

- Depth: ≤ maximum depth specified and no rootball (regardless of size) > 550 mm in depth.
- Diameter: ≥ depth.

Height of root crown
General: Ensure that root crown is at the surface of the rootball.

Non-suckering rootstock
Grafted cultivars/varieties: Supply trees grafted onto non-suckering rootstock.

3 EXECUTION

3.1 WARRANTIES

True-to-species
Parties: Supplier(s) to the principal.

Form: All the plants supplied under these works are true-to-species and type, and free of disease, fungal infection and/or any other impediment to their future growth and that they have been fully acclimatised for the conditions of the site.

Submission of warranty: At the time of each delivery.

Maintenance
Parties: Supplier(s) to the principal.

Form: Maintain all plant materials sourced and secured by the supplier throughout the procurement and pre-transplanting maintenance period. Cover the cost of purchase, labour, equipment, transport and materials to replace any losses, with plant materials of equivalent sizes and quality during the warranty period. Ensure that it is physically possible for any or all of the on site plant material to be successfully prepared and transplanted.

Warranty period:

- Commencement: The date of contract.
- Completion: To cease in respect of any particular plant material upon issue of a delivery notice issued by the contractor upon delivery to site.
- Earliest delivery date: One week after the date of contract.

4 SELECTIONS

4.1 TREE INSPECTION FORM

General

Date		Reference	
Purchaser			
Supplier		Inspected by (supplier/purchaser/agent)	
Species		Batch identification	
Number of trees in batch		Container/rootball size	
Height range		Calliper range	
Special requirements			

Above ground

Labelling	
Health and vigour	
Freedom from pests/disease	
Freedom from injury	
Self-supporting	
Stem taper	
Pruning	
Apical dominance	
Crown symmetry	
Stem structure	

Included bark	
Trunk position	
Compatibility of graft unions	
Indication of north	

Below ground

Inspection method used	
Number of trees in sample	
Root division	
Root direction	
Diameter nonconforming roots at rootball extremity	
Rootball occupancy	
Rootball depth	
Height of root crown	
Non-suckering rootstock	

Conformance with specification

Conforming	
Comments	
Name and signature (inspector)	

0256 LANDSCAPE – ESTABLISHMENT

1 GENERAL

1.1 RESPONSIBILITIES

General
Plant establishment: Maintain the contract area during the plant establishment period.

Program
Plant establishment period: For 3 months from installation of each soft landscaping element.

1.2 CROSS REFERENCES

General
Requirement: Conform to the following:
- *General requirements*.
- *Landscape – soils.*
- *Landscape – soft surfaces.*
- *Landscape – planting.*
- *Irrigation.*
- *Landscape – maintenance.*

1.3 INSPECTION

Notice
Inspection: Give sufficient notice so that inspection of the contract area may be made at the following:
- Date of installation of each soft landscaping element.
- Monthly intervals during the plant establishment period.
- Date of completion of the plant establishment period.

1.4 SUBMISSIONS

Monitoring program
General: Provide a monitoring program developed by a specialist monitoring consultant and incorporating the following:
- Photographic record including:
  . Colour photographs.
  . Documented monitoring locations and photograph angles.
- Reporting periods including photographic records at the following:
  . Before commencement of the works.
  . Date of installation of each soft landscaping element.
  . Monthly intervals during the plant establishment period.
  . Date of completion of the plant establishment period.
  . Benchmark definition based on remnant communities.
  . Replicated measurements over time and comparative analysis with regard to the benchmark.

Specialist consultant: Submit the name, qualifications including research papers and scientific publication details, and contact details of the specialist monitoring consultant.

Notice
Inspection: Provide two days notice of the following operations:
- Application of herbicide.
- Application of fertiliser.
- Watering.
- Each site maintenance visit.

Log book
Records: Log the following on a weekly basis:
- Description, time and method of application of toxic material.
- Maintenance work details.
- Inclement weather to verify inability to carry out work within the specified time frame.

Availability: Upon request.

Replacement plants
Species: Provide written certification that all plant material is true to the required species and type.

2 EXECUTION

2.1 GENERAL

Special instructions
Priority: If instructed by the contract administrator, attend to certain areas and procedures as a priority. Obtain approval for additional costs before commencement of works.

Reporting
Monthly report: Submit regular reports by the last Friday of each month:
- Of the general status of works.
- Include soil test results as required for the fertilising programs.
- Plant replacement requirements.

Incident reports: Report immediately verbally and confirm in writing any disturbance or incidence affecting or likely to affect the day to day scheduling of works.

Disruption of works by others
Other contractors: Make arrangements to work around the disturbance.

2.2 PLANTING WORKS

Planting
Planting: Ensure the general appearance and presentation of the landscape and the quality of plant material at date of practical completion is maintained for the full planting establishment period.

Existing plant material: Maintain existing planting and grass within the landscape contract area as specified for the corresponding classifications of new grassland or planting.

Replacements: Replace failed, dead and/or damaged plants at maximum 3 week intervals as necessary throughout the full plant establishment period.

Pruning
General: Prune to AS 4373.

Fertilising
Soil tests: Take samples from both planting beds and lawn areas and conduct tests.

Fertilising: Base the fertilisation program on the soil testing results. Fertilise trees once every two years. Generally apply an all purpose fertiliser of N:P:K (nitrogen:phosphorus:potassium) 10:4:6 at recommended rates. Alternatively apply 12 month slow release fertiliser (such as Nutricote) at the manufacturer's recommended rate. Apply all purpose fertiliser to shrubs annually in two bands and cultivated into the soil 100 mm deep.

Season: Fertilise shrubs and trees in September and March according to their seasonal growth requirement.

Insect and disease control
Period for treatment: Until the problem has been eliminated.

Chemical spray: Apply outside of normal working hours.

Stakes and ties
Generally: If plants are unable to be self supported or if stakes are damaged, stake or restake the plants as follows:
- Drive three hardwood stakes placed obliquely with the first stake on the opposite side to the prevailing winds.
- Do not single stake large plants.

Removal: If plants are robust with well developed systems and are strong enough to no longer require support, remove stakes and ties.

2.3 GRASS

Mowing and trimming

Litter: Remove litter and fallen branches before mowing.

Height: Consistent with the growth habit of the grass variety and maintained at 25 mm to 40 mm throughout the year.

Program: Weekly during the mowing season, November to March, and at bi-weekly intervals during April to October. Do not mow under wet conditions.

Raking: Once every month before mowing, during the mowing season, with a flexible rake. On alternate mowings, adopt a north-south and east-west pattern.

Edges: At the same time as mowing, trim lawn edges to plant beds, pathways, base of trees and other obstacles. Ensure trees and shrubs are not damaged.

Clippings distribution: Off-site.

Topdressing

Topdressing material for established lawns: Weed free imported sandy topsoil to a depth of 5 mm.

Program: The spring following establishment.

Topdressing material for remediation of depressions or irregularities: Apply coarse or medium soil to AS 4419 suitable for application to turf or grass seeded areas.

Fertilising

Fertilising: Apply lawn fertiliser at the completion of the first and last mowings of the plant establishment period, and at other times as required to maintain healthy grass cover.

2.4 GARDEN BEDS

Weeding

Weeds: Unwanted plants and grasses considered invasive to the locality.

Program:

- Lawns: Quarterly, and as determined by the relationship of the general lawn condition and weed growth.
- Trees and shrubs: As required for planted, paved and mulched areas to be weed free when observed at bi-weekly intervals.

Method: Clear and keep clear vigorous ground covers 200 mm from the base of any shrub or tree:

- Small areas: By hand.
- Large areas: Proprietary herbicides.

Herbicide application: Avoid windy days or if rain is likely to follow within 12 hours. Apply:

- To the manufacturer’s instructions and material data and safety sheets.
- When the weather is humid with moderate temperatures and maximum sunlight.
- When the ground has recommended soil moisture.

Rubbish removal

Rubbish: Remove loose rubbish such as bottles, papers, and cigarette butts from the site. Execute this work regularly so that all areas are free from rubbish when observed at bi-weekly intervals.

Leaf litter: Remove from all path and lawn areas.

Leaf litter distribution: Off-site.

Mulched surfaces

Inspection: Bi-weekly to determine mulch requirements.

Depth: Maintain a minimum depth of:

- 75 mm for organic mulch.
- 50 mm for gravel mulch.

Remulching: Maintain the original ground levels around the base of plants.

2.5 WATERING

Establishment

Extent: To all planting and turf areas.

Water quality:

- pH between 5.5 and 7.5.
- Total soluble salts less than 1000 mg/litre.
- No substances that would be toxic to plant growth.

Watering program: Minimum three complete waterings, soaking to a depth of 150 mm at fortnightly intervals for the first 6 weeks of plant establishment irrespective of natural rainfall. Confirm soaked depth and record in the log book.

Water restrictions: Coordinate the water supply and confirm the watering regime against state and territory government legislation and restrictions at the time.

Irrigation

Hand watering: Manually water all lawn and planting areas until the proposed irrigation system is fully operational, soaking to a depth of 150 mm for lawn and 300 mm for planting. Avoid frequent dampening of the surface. Allow the surface of the soil to partially dry out between waterings.

Irrigation system program: To suit the following:

- The precipitation requirements of the individual zones/stations with regard to types of plants.
- The infiltration rate of the soil/medium and associated physical factors seasons, evaporation, exposure, topography, local authority restrictions.
- An allowance for adjustment or shut down during and after periods prolonged heavy rains.

Equipment maintenance:

- Check all components for proper operation.
- Repair or replace damaged components with equivalent parts.
- Flush any dirt or foreign matter from the system and clear all blockages.

Operation: Ensure by adjustment or replacement of components, that the overall operation of the system is efficient and operational for the entire planting establishment period.

Hand watering

General: Manually water all lawn and planting areas, soaking to a depth of 150 mm for lawn and 300 mm for planting. Avoid frequent dampening of the surface. Allow the surface of the soil to partially dry out between waterings.

2.6 COMPLIANCE

Criteria

Generally: Plant establishment shall be deemed complete, subject to the following:

- Repairs to planting media completed.
- Ground surfaces are covered with the specified treatment to the specified depths.
- Pests, disease, or nutrient deficiencies or toxicities are not evident.
- Organic and rock mulched surfaces have been maintained in a weed free and tidy condition and to the specified depth.
- Vegetation is established and well formed.
- Vegetation cover to the **Plant establishment compliance schedule**.
- Plants have healthy root systems that have penetrated into the surrounding, undisturbed ground and not able to be lifted out of its planting hole.
- Vegetation is not restricting essential sight lines and signage.
- Only frangible species are growing within road side clear zones.
- Specified vegetation setbacks from services and road furniture are evident.
- All hard landscape works have been installed and are operating as specified.
- Collection and removal of litter.
- Removal of mulch from drainage and access areas.
- All non-conformance reports and defects notifications have been closed out.

Plant establishment compliance table

Plant material	**Acceptable failure per area**	**Acceptable concentration of failure**
Tube stock	< 10%	< 15% in any given location
140 mm	< 5%	< 15% in any given location
300 mm or larger	< Nil%	Nil %
Turf	< 5%	Nil %
Cells	< 5%	< 15% in any given location

0261 LANDSCAPE – FURNITURE AND FIXTURES

1 GENERAL

1.1 RESPONSIBILITIES

General
General: Provide landscape furniture and fixtures as documented.

1.2 CROSS REFERENCES

General
Requirement: Conform to the following:
- *General requirements*.
- Materials and finishes schedule.
- *Landscape – maintenance.*

1.3 INSPECTION

Notice
Inspection: Give notice so that inspection may be made of the following:
- Custom-built fixtures fabricated and ready to be delivered to the site.
- Furniture items delivered to site before installation.
- Site locations or substrates prepared to receive furniture or fixtures before installation.

1.4 SUBMISSIONS

Subcontractors
General: Submit names and contact details of proposed suppliers and installers.

Installation
General: Submit the manufacturer's standard drawings and details showing methods of construction, assembly and installation; with dimensions and tolerances.

Preservative treatment
CCA treated timber: If proposed to be used, submit details.

Samples
Submit samples as follows:
- Single seat – FN 01.
- Bench with backrest – FN 02.
- Table – FN 03.
- Tree surrounds – FI 01.
- General waste bin – FI 02A.
- Recycling bin – FI 02B.

2 EXECUTION

2.1 FIXING

Erection
Line and level: Erect posts or poles vertically. Erect furniture items level. Provide a level area around benches and seats where installed on slopes.

2.2 COMPLETION

Maintenance manual
General: Submit the manufacturers' data as follows:
- Recommendations for service use, care and maintenance.
- List of manufacturers and suppliers of replacement parts.

0274 CONCRETE PAVEMENT

1 GENERAL

1.1 RESPONSIBILITIES

General

General: Provide finished surfaces that are:

- Free draining and evenly graded between level points.
- Even and smooth riding.

Performance

Conformance: Comply with the engineering documentation in respect of the subgrades, bases, levels, grades and the minimum details of thickness, reinforcement and concrete strength for pavements.

1.2 CROSS REFERENCES

General

Requirement: Conform to the following:

- *General requirements*.
- Materials and finishes schedule.
- *Pavement ancillaries*.
- *Concrete finishes*.
- *Precast concrete*.

1.3 STANDARDS

Concrete

Specification and supply: To AS 1379.

Materials and construction: To AS 3600.

Slip resistance

Classification: To AS/NZS 4586 for new pedestrian surface materials, as tested by wet pendulum, shall be to V.R11.

Slip resistance measurement of existing installations: To AS/NZS 4663.

Testing authority

General: Independent third party Registered testing authority.

1.4 INTERPRETATION

Definitions

General: For the purposes of this worksection the definitions given in AS 1348 and the following apply.

- Levelness: Absolute level tolerance - maximum deviation from design levels.
- Ambient temperature: The air temperature at the time of mixing and placing of concrete.
- Average ambient temperature: Average value of the maximum and minimum ambient temperatures over the relevant period at a site.
- Concrete class:
  - Normal: Concrete which is specified primarily by a standard compressive strength grade and otherwise in conformance with AS 1379 clause 1.5.3.
  - Special: Concrete which is specified to have certain properties or characteristics different from, or additional to, those of normal-class concrete and otherwise in conformance with AS 1379 clause 1.5.4.
- Early age: A mean compressive strength at 7 days exceeding the values shown in AS 1379 Table 1.2.
- Green concrete: Concrete which has set but not appreciably hardened.
- Flatness: Relative level tolerance - maximum deviation from a 3 m straightedge laid on the surface.
- Weather:

- Cold: Ambient shade temperature < 10°C.
- Hot: Ambient shade temperature > 32°C.

1.5 INSPECTION

Notice

Inspection: Give notice so that inspection may be made of the following:

- Concrete formwork in position.
- Commencement of concrete placing.
- Completion of concrete placing.
- Evaluation of surface finish.

1.6 TOLERANCES

General

Edges abutting gutters: Within ± 5 mm of the level of the actual gutter edge.

Rigid pavement surface:

- Absolute tolerance: + 10 mm, - 0 mm.
- Relative tolerance: ± 5 mm.

Joint locations in plan (rigid pavement): ± 15 mm.

1.7 SUBMISSIONS

Samples

Aggregates: Nominate the source for all aggregates proposed.

Subcontractors: Submit names and contact details of proposed pre-mixed concrete suppliers, and alternative source of supply in the event of breakdown of pre-mixed or site mixed supply.

Submit samples as follows:

- In situ concrete footpath – PV 07.

Sample panels

General: Prepare a sample panel of each type of finish as flows:

- Size: ≥ 2 m^2.
- Include samples of junction details and trim.
- Preserve each panel until related work is complete.

The sample panel shall be the benchmark of quality of execution for the project.

1.8 PRODUCTS

General

Requirement: Conform to engineering documentation, the materials and finishes schedule, and the design drawings.

Execution

Work method statements: Submit proposals for the methods and equipment to be used for the pavement works, including the following:

- Staging of the work, access and traffic control methods.
- Disposal of surface water, control of erosion, contamination and sedimentation of the site, surrounding areas and drainage systems.
- Methods and equipment for each operation.
- Sources of materials.
- Material stockpiles.
- Methods of concrete manufacture.
- Temperature control, curing and protection methods for concrete.

Mix design variation: If a variation is proposed, submit a further mix design report.

Concrete: Submit proposals for mixing, placing, finishing and curing concrete including the following:

- Addition of water at the site.
- Changes to the plastic concrete mix.

- Curing and protection methods.
- Cutting or displacing reinforcement, or cutting hardened concrete.
- Handling, placing, compaction and finishing methods and equipment, including pumping.
- Sequence and times for concrete pours, and construction joint locations and relocations.

Cores, fixings and embedded items: If required, submit shop drawings showing the proposed locations, clearances and cover, and indicate any proposed repositioning of reinforcement.

Cutting or coring: If cutting or coring of hardened concrete is proposed, provide details.

Sawn joints: Submit proposed methods, timing and sequence of sawing joints.

Damaged galvanizing: If repair is required, submit proposals to AS/NZS 4680 Section 8.

Splicing: If splicing not documented is proposed, submit details.

Welding: If welding of reinforcement is proposed, provide details and give notice before welding reinforcement.

Joint sealants: Submit proposals for installation methods and sealant performance.

Concrete placing: Submit proposals for size of the area to be placed and the spacing of planned construction joints before placement commences.

Crack assessment: If unplanned cracks occur in the finished pavement, submit proposals for investigation.

Surface repair method: If required, submit details of the proposed method before commencing repairs.
Trial section: Submit trial pavement.

Testing
Test certificates and records: Submit test certificates, and also retain results on site.

2 PRODUCTS

2.1 REINFORCEMENT

General
Requirement: Conform to engineering documentation.

2.2 AGGREGATE

General
Requirement: Conform to engineering documentation, the materials and finishes schedule, and the design drawings.

2.3 CEMENT

General
Requirement: Conform to engineering documentation.

2.4 WATER

General
Requirement: Conform to engineering documentation.

2.5 ADMIXTURES

General
Requirement: Conform to engineering documentation.

2.6 CURING COMPOUNDS

General
Requirement: Conform to engineering documentation.

2.7 OTHER MATERIALS

Tactile ground surface indicators
Standard: To AS/NZS 1428.4.1.

3 EXECUTION

3.1 SUBGRADE

Preparation
Conformance: Prepare in conformance with the engineering documentation.

3.2 SUBBASE

Preparation
Conformance: Prepare in conformance with the engineering documentation.

3.3 TRIAL PAVEMENT

Trial pavement: Demonstrate by placing a test section that the proposed method of placement will produce a conforming pavement. Remove test sections which do not comply with requirements and dispose of as directed.

3.4 CONCRETE MIX

General
Requirement: Conform to engineering documentation, the materials and finishes schedule, and the design drawings.

Standard
Concrete mix and supply: To AS 3600 Section 17 and AS 1379.

3.5 TESTING

General
Requirement: Conform to engineering documentation.

Standards
Sampling, identification, testing and recording: To AS 1012.

3.6 INSTALLATION

General
Requirement: Conform to engineering documentation, the materials and finishes schedule, and the design drawings.

Junctions with existing pavements
Trimming: Where the pavement is to be joined to an existing pavement remove a strip of the existing pavement at least 300 mm wide for its full depth and trim the edge vertically before placing new pavement material.

Existing sealed pavement: Trim the seal to a neat edge.

Fixed formwork
Requirement: Conform to engineering documentation.

Reinforcement
Requirement: Conform to engineering documentation.

3.7 CONCRETE PLACING AND COMPACTION

General
Requirement: Conform to engineering documentation.

Concrete placing
General: Place concrete uniformly over the width of the slab or lane and so that the face is generally vertical and normal to the direction of placing. Hand spread concrete using shovels, not rakes.

Remove: Any water ponding on the ground.

Placing sequence: Commence from one corner (usually the lowest point) and proceed continuously out from that point.

Weather: Do not place concrete in temperatures above 30°C or below 10°C without adequate precautions.

Compaction
Thickness 100 mm or less: Compaction through placing screeding and finishing processes. If required use a hand-held vibrating screed at the surface. Do not use immersion vibrators.

Thickness > 100 mm and downturns: Use an immersion vibrator.

Placing records

General: Keep on site and make available for inspection a log book recording each placement of concrete, including the following:

- Date of concrete placement.
- Delivery dockets noting the specified grade and source of concrete.
- Slump measurements to AS 1012.3.1.
- The portion of work.
- Volume placed.

Rain

General: During placement and before setting, do not expose concrete to rain.

Protection: Protect surface from damage by covering until hardened.

Concrete placing in cold weather

Cement: Do not use high alumina cement.

Placing concrete: Maintain the temperature of the freshly mixed concrete at 5°C.

Formwork and reinforcement: Before and during placing maintain temperature at 5°C.

Severe weather: If severe weather conditions are predicted, use high early strength cement.

Temperature control: Heat the concrete materials, other than cement, to the minimum temperature necessary to ensure that the temperature of the placed concrete is within the limits specified.

Admixtures: Do not use calcium chloride, salts, chemicals or other material in the mix to lower the freezing point of the concrete.

Frozen materials: Do not allow frozen materials or materials containing ice to enter the mixer, and keep free of frost and ice any forms, materials, and equipment coming in contact with the concrete.

Maximum temperature of water: 60°C when it is placed in the mixer.

Plastic concrete: Prevent plastic concrete from freezing, without using salts or chemicals.

Concrete placing in hot weather

Handling: Prevent premature stiffening of the fresh mix and reduce water absorption and evaporation losses. Mix, transport, place and compact the concrete in conformance with the **Elapsed delivery time table**.

Placing concrete: Maintain the temperature of the freshly mixed concrete in conformance with the **Hot weather placing table**.

Formwork and reinforcement: Before and during placing maintain temperature at 35°C.

Severe weather: If ambient shade temperature > 38°C, do not mix concrete.

Temperature control: Select one or more of the following methods of maintaining the specified temperature of the placed concrete:

- Cool the concrete using liquid nitrogen injection before placing.
- Cover the container in which the concrete is transported to the forms.
- Spray the coarse aggregate using cold water before mixing.
- Use chilled mixing water.

Hot weather placing table

Concrete element	Temperature limit
Normal concrete in footings, beams, columns, walls and slabs	35°C
Concrete in sections ≥ 1 m in all dimensions except for concrete of strength 40 MPa or greater, in sections exceeding 600 mm in thickness	27°C

Evaporation control barriers: Erect barriers to protect freshly placed concrete from drying winds.

3.8 CONCRETE PRIMARY FINISH

General

Requirement: Conform to engineering documentation.

Finishing: Do not commence finishing until all bleed water has evaporated from the surface.

Commence: Immediately after placement and spreading and compaction of the plastic concrete, start finishing operations to achieve the documented finish.

Finish: Refer to materials and finishes schedule and the design drawings.

Unformed surfaces

General: Strike off, screed and level slab surfaces to finished levels, to the tolerance class and finish noted in the Unformed surface finishes schedule.

Formed surfaces

Damage: Do not damage concrete works through premature removal of formwork.

Curing: If forms are stripped when concrete is at an age less than the minimum curing period, commence curing exposed faces as soon as the stripping is completed.

3.9 CONCRETE CURING

General

Requirement: Conform to engineering documentation.

Curing: Commence curing as soon as possible after finishing and extend for a minimum period of 3 days.

End of curing period: Prevent rapid drying out at the end of the curing period.

Protection: Maintain at a reasonably constant temperature with minimum moisture loss, during the curing period.

Cold weather curing

General: Maintain concrete temperature between 10 – 20°C for curing period.

Hot weather curing

Curing compounds: If it is proposed to use curing compounds, provide details.

Protection: Select a protection method as applicable.

- If the concrete temperature exceeds 25°C or if not protected against drying winds, protect the concrete using a fog spray application of aliphatic alcohol evaporation retardant.
- If ambient shade temperature is > 35°C, protect from wind and sun using an evaporative retarder until curing is commenced.
- Immediately after finishing, either cover exposed surfaces using an impervious membrane or hessian kept wet until curing begins, or apply a curing compound.

Curing methods

Covering sheet method: Immediately after finishing operations cover concrete using damp hessian or cotton mats overlapped at least 150 mm and anchored against displacement by wind or other interference. Keep the mats continuously damp until covered by the covering sheet material. Repair tears immediately.

Moist curing method: Immediately after finishing operations and once concrete has set sufficiently to be not damaged by the curing process keep the concrete surface continuously damp by ponding or spraying constantly with water, fog, or mist, using suitable spraying equipment. Continue wetting for the curing period.

Self levelling toppings: To AS 3799, if also used for curing.

Coloured concrete: Do not cure with plastic sheeting, damp sand or wet hessian. Use only chemical curing compounds compatible with the sealer or simply use a sealer (It must then comply with the requirements of a chemical compound sealer).

Curing compound

Application: Provide a uniform continuous flexible coating to AS 3799 without visible breaks or pinholes. Ensure coating remains unbroken at least for the required curing period after application. Respray defective areas within 30 minutes. Respray within 3 hours after heavy rain.

3.10 JOINTS

General

Requirement: Conform to engineering documentation.

General: Construct expansion, contraction and construction joints straight and plumb. Make transverse joints normal to longitudinal joints. Extend transverse expansion and contraction joints continuously from edge to edge of the pavement through interconnected slabs.

Joint layout: Install joints as documented.

Joint spacings: Refer to the engineering documentation.

Joint widths: refer to the engineering documentation and the design drawings.

Contraction joints

Installation: Construct transverse and longitudinal contraction joints by early age power sawing or by placing an insert in the fresh concrete.

Dowelled joints

Dowelled contraction joint: Place dowels at 300 mm centres orthogonal to the joint direction and parallel to the pavement surface, accurate alignment is critical, ensure proper field supervision.

Dowel assembly: Use a dowel-assembly support frame firmly secured to the subbase during concrete placement. Prevent the dowel assembly support frame from passing through the joint. Do not insert dowels during the placement of concrete.

Debond dowel: Coat with a debonding coating to 0.5 length + 25 mm. Embed the unpainted half of the dowels in the slab placed first.

Movement: Do not distort or displace beyond the alignment tolerances under testing or during construction. Do not remove and replace dowels in pre-formed holes.

Tie bar joints

Longitudinal contraction joints: Place tie bars at 800 mm centres. Alignment accuracy of tie bars is not critical.

Construction joints

Installation: Place header board on the subbase or subgrade at right angles to the pavement centre line.

- Planned location: Terminate each day's placing operation at a transverse construction joint located to coincide with a planned contraction or expansion joint.
- Unplanned joints: If placement is interrupted for 30 minutes or longer, form a tied transverse construction joint within the middle third of the distance between planned joints but no closer than 1.5 m to the nearest planned joint. If necessary remove placed concrete back to the required location.

Expansion joints

Expansion joints: Provide formed full depth joints around structures and features which project through, into or against the pavement, and elsewhere as required.

Doweled expansion joints: Cap dowels at one end with a compressible material.

Formed joints

Full depth joints: Form the edge of the concrete placed first to provide a smooth, vertical face. After stripping and cleaning fix the joint filler with a suitable waterproof adhesive to the face of the slab, and place the adjoining concrete after the adhesive has set.

Weakened plane joint: Cut a crack-inducing groove by using a suitable tool into the plastic concrete during finishing of the concrete surface. Compact and refinish the plastic concrete around the groove after forming the joint.

Rebated groove joints: Form the rebate by securely fixing removable steel or timber form strips to the form or forms on the slab which is placed first, so that the top of the steel strip is flush with the top of the form. After stripping and cleaning, fix the joint filler in the rebate after placing the adjoining concrete.

Sawn joints

Weakened plane joint: Saw the hardened concrete to depth at least ¼ to ⅓ of the pavement thickness and to a uniform width in the range of 3 – 5 mm as follows:

- Timing: Commence sawing, regardless of time or weather conditions, as soon as the concrete has hardened sufficiently to permit cutting with only minor ravelling of the edges of the saw cut. Complete sawing no later than 24 hours after concrete placement.
- Sequence: If possible, saw every third transverse joint initially, then saw the intermediate joints. Start where concrete placement has commenced.
- Cracking: If the concrete has already cracked near the location chosen for a joint, do not saw a joint in that location. If a crack develops ahead of the saw cut, discontinue sawing and submit proposals for extra sawn joints. If uncontrolled cracking occurs, suspend concrete placing.
- Stand-by machines: Provide one stand-by sawing machine for each machine planned to be used.

- Cleaning and protection: Immediately after each joint is sawn, flush the saw cut and adjacent concrete surface using water, until the waste from sawing is removed from the joint. Temporarily caulk the joint using plastic or rubber tubing, or a suitable Tee shaped extrusion. Leave the caulking in place until grooving and sealing.

Rebated groove joints: Saw straight, parallel sided grooves for joint seals on top of and centred on the sawn weakened plane joints.

- Timing: Commence sawing after the curing period has ended, immediately before joint sealing. Saw during daylight hours.

Protection: Where there is a time elapse after sawing and before joint sealing, install a thin-splined rubber strip with a free width slightly larger than the saw cut at the bottom of the saw cut after washing slurry from sawn groove to temporarily prevent ingress of solid material.

Preparing joints

Stripping time: At least 12 hours.

Clean: Immediately before installation of the sealer ensure that the joint space is dry, clean and free from loose material. Remove laitance, curing compound and protrusions of hardened concrete from the sides and upper edges of the joint.

Joint sealing

Install backer rod: Install backer rod of closed cell polyethylene strip to the bottom of the sealant groove.

Sealant installation: Use a field moulded sealant gunned into the joint above the backing rod in a semi-liquid form.

Sealant type: Provide silicone sealant in conformance with manufacturer's recommendations.

3.11 SURFACE SEALERS

Slip resistance

Sealer: Apply surface sealer after the curing period and when concrete has dried to allow the sealer to penetrate into the concrete surface.

Curing sealer compound: If using the sealer as a curing compound, apply directly after finishing.

Concrete finishes

Conform to: Materials and finishes schedule.

Surface repairs

Surface repair method: If surface repairs are required, submit proposals.

3.12 COMPLETION

Protection

General: Keep traffic, including construction plant, off the pavement entirely during curing, and thereafter permit access only to necessary construction plant vehicles that conform to the predetermined load limits appropriate to the use of the concrete.

Reinstating adjacent surfaces

General: Reinstate surfaces next to new pavements and associated elements. Where an existing flexible road pavement has been disturbed, trim it back to a straight and undisturbed edge 250 – 300 mm from and parallel to the new concrete for the full depth of the slab. Backfill with asphalt rammed solid, using suitable rammers.

Traffic on pavement

General: Give notice before opening the pavement to traffic before the work is completed. Provide protection.

Testing

Concrete pavement: Check tolerance criteria for flatness and levelness. Where pavement does not conform submit rectification proposal.

Unplanned cracking:

- 0.3 mm wide crack is acceptable.
- > 1 mm must be assessed, submit a proposal for possible cause and rectification processes.

0275 SEGMENTAL PAVERS – MORTAR BED

1 GENERAL

1.1 RESPONSIBILITIES

General

General: Provide external paving:

- Consistent in colour and finish.
- Firmly bonded to substrates for the expected life of the installation.
- Resistant to expected impacts in use.
- Set out with joints accurately aligned in both directions.
- To direct all water flowing from supply points to drainage outlets without leakage to the substrate or adjacent areas.

Performance

Conformance: Comply with the engineering documentation in respect of the subgrades, bases, levels, grades and the minimum details of thickness, reinforcement and concrete strength.

1.2 CROSS REFERENCES

General

Requirement: Conform to the following:

- *General requirements*.
- Materials and finishes schedule.
- *Pavement ancillaries*.
- *Stone masonry*.

1.3 STANDARDS

Slip resistance

Classification: To AS/NZS 4586 for new pedestrian surface materials, as tested by wet pendulum, shall be to V.R11.

Slip resistance measurement of existing installations: To AS/NZS 4663.

Luminance

Classification: To AS/NZS 1428.4.

Testing authority

General: Independent third party Registered testing authority.

1.4 INTERPRETATION

Definitions

General: For the purposes of this worksection the definitions given below apply.

- Adhesives:
  - Cementitious (C): Adhesives in which the binders are hydraulic, e.g. Portland cement, with aggregates and organic additives.
  - Dispersion (D): Adhesives in which the binders are in the form of aqueous polymer dispersion with mineral fillers and organic additives.
  - Reaction resin (R): Adhesives in which in the binders are synthetic resins with mineral fillers and organic additives. The curing occurs by chemical reaction.
- Substrates: The surface to which a material or product is applied.
- Bedding: Mixtures of materials which are applied to substrates in a plastic state and dry and cure to adhere tiles to substrates.
  - Adhesive bedding: Tiling adhered by adhesives.
  - Mortar bedding: Tiling adhered in a cementitious mortar bed.

- Pavers: Slabs made from clays, stone, precast concrete and/or other inorganic raw materials generally over 20 mm thick used as coverings for floors and supported over continuous substrates.
- Terrazzo tiles – cementitious: Manufactured cementitious terrazzo tiles formed in a suitable machine to give sufficient compaction and density to the finished surface, and moisture cured before grinding and honed at the place of manufacture. Thickness usually 35 mm.
- Lippage: Height deviation between adjacent pavers.

1.5 INSPECTION

Notice

Inspection: Give notice so that inspection may be made of the following:

- Substrate immediately before paving.
- Trial set-outs before execution.
- Control joints before sealing and grouting.

1.6 SUBMISSIONS

Samples

General: Submit labelled samples of pavers, grout and sealants, illustrating the range of variation in colour and finish.

Submit samples as follows:

- Granite paving – main 1 – PV 01A.
- Granite paving – main 2 – PV 01B.
- Granite paving – footpath – PV 02.
- Granite paving – header – PV 03.
- Granite paving – square – PV 04A.
- Granite paving – square (trafficable) – PV 04B.
- Granite paving – parking 1 – PV 05A.
- Granite paving – parking divider – PV 05B.
- Granite paving – entry – PV 06.
- Porphyry cobblestone – PV 51.
- Tactile indicator – TGSI 01.

Sample panels

General: Prepare a sample panel of each type of finish as follows:

- Size: ≥ 2 m^2.
- Include samples of junction details and trim.
- Preserve each panel until related work is complete.

The sample panel shall be the benchmark of quality of execution for the project.

Execution

Grouting: Submit proposals for grouting methods and materials.

Margins: If it appears that minor variations in joint widths or overall dimensions will avoid cut pavers, submit a proposal.

1.7 TESTS

Slip resistance

Type tests: Submit as follows:

- Slip resistance to AS/NZS 4586: Individual paver types and installed paving.
- Field tests of completed pavement: Slip resistance to AS/NZS 4663.
- Program: Conduct field tests immediately before the date of practical completion.

Testing of pavers

General: In accordance with CSIRO BEST (Built Environment Stone Tile) test methods.

Type: Submit results of tests carried out by the manufacturer, confirming that the supplied paver achieve or better, as follows:

- Compressive strength (wet/dry): minimum 193MPa/217MPa.

- Flexual strength (wet/dry): minimum 9.5MPa/11.1MPa.
- Breaking load: minimum 5kN.
- Moisture content and water absorption (by weight): maximum 0.14%.
- Bulk specific gravity: minimum 2.09 tonnes/m^3.

Luminance

Type test: Submit as follows:

- Luminance contrast to AS/NZS 1428.4.1: Tactile paver types to background surface, in both wet and dry conditions.

Salt efflorescence

General: Provide prototype testing of cementitious tiles for salt efflorescence as follows:

Provide a 20 sq. m. area of external paving at an exposed location on a concrete slab as directed on site as early in the construction programme as possible, at least 9 months before final paving.

The prototype shall demonstrate the following means proposed to avoid salt efflorescence:

- The selection of a product of materials known to be salt-free.
- All cement pavers delivered to the site to be fully cured by a curing process that has been slowed as much as possible to minimise efflorescence.
- The pavers are dimensionally stable.
- The paving work carried out on substrate of the correct moisture content.
- Apply sealant to the prototype in three separate areas with generically different sealants applied as recommended by the tile manufacturer.

If efflorescence appears before final paving review the above conditions. Note some manufacturers of cement-rich products claim efflorescence can be minimised but not eliminated and over a long period the situation is self-correcting by further chemical change.

1.8 PRODUCT CONFORMITY

General

General: Submit current assessments of conformity as follows:

- Declaration of conformity by an ISO 9001 quality management system certified supplier:
  - Slip resistance of tiles to AS/NZS 4586.
  - Marking and Classification of tile adhesive to AS 4992.1.

1.9 TOLERANCES

Completed paving

General: Conform to the **Surface level tolerances table:**

Surface level tolerances table

Item	**Level tolerance**	
	Absolute	**Relative**
Vehicular pavements	± 5 mm	5 mm
Pedestrian pavements	± 10 mm	< 10 mm

Level discontinuity: Between adjacent pavers and other surface features for footpath areas 1.5 mm and roadway areas 2.0 mm.

Lippage:

- Unpolished pavers: < 2 mm.
- Polished pavers 300 x 300 mm or less: < 1 mm, with 5% not exceeding 1.5%.
- Polished pavers over 300 x 300 mm: < 1.5 mm, with 5% not exceeding 2%.

2 PRODUCTS

2.1 ADHESIVES

General

Standard: To AS 2358 or AS 4992.1.

Type
General: Provide adhesives compatible with the materials and surfaces to be adhered.

Prohibited uses: Do not provide the following combinations:

- Organic PVC-based adhesives and organic natural rubber latex adhesives in damp or wet conditions.
- PVA (polyvinyl acetate) based adhesives in wet areas or externally.

2.2 MORTAR

Materials
Cement: To AS 3972.

- Type: GP, GL or GB.
- White cement: Iron salts content ≤ 1%.
- Off-white cement: Iron salts content ≤ 2.5%.

Lime: To AS 1672.1.

Sand: Fine aggregate with a low clay content selected for grading, sharp and free from efflorescing salts.

Water: To the recommendations of AS 3958.1.

Measurement of volume: Measure binders and sand by volume using buckets or boxes. Do not allow sand to bulk by absorption of water.

Bedding mortar
Proportioning: Select proportions from the range 1 cement:3 sand – 1 cement:4 sand to obtain satisfactory adhesion. Provide minimum water.

Mixing: To AS 3958.1.

Gauging: Site gauged by volume.

2.3 GROUT

Type
Cement based proprietary grout: Mix with water. Fine sand may be added as a filler in wider joints.

Portland cement based grout: Mix with fine sand. Provide minimum water to achieve workability.

- For joints < 3 mm: 1 cement:2 sand.
- For joints ≥ 3 mm: 1 cement:3 sand.

Pigments
Pigments for coloured grout: Provide colourfast pigments compatible with the grout material. For cement-based grouts, provide inorganic mineral pigments or lime-proof synthetic metallic oxides compatible with cement.

Water
General: Clean and free from any deleterious matter.

Grout to resin terrazzo tiles: Resinous material supplied by the tile supplier.

2.4 PAVERS

Standard
Masonry units, pavers and flags: To AS/NZS 4455.2.

Salt attack resistance grade to: AS/NZS 4455.1 Table 2.3: General purpose grade.

Sandstone flagging
Description: Provide sound stone flags of uniform quality. Reject flags with following defects liable to affect strength and durability: vents, cracks, fissures, seams, porous inclusions, foreign material, loose surface material, and discolouration.

Matching: Select for optimum matching of colour and pattern.

Split flagging thickness: Minimum 50 mm, maximum 75 mm.

Face size: Utilise smaller sizes for pathways and larger sizes for open areas and maintain traditional stone flagging appearance.

Stone setts
Description: Igneous stone cubed cobble style setts.

2.5 OTHER MATERIALS

Tactile ground surface indicators
Standard: To AS/NZS 1428.4.1.

3 EXECUTION

3.1 SUBSTRATES

Drying and shrinkage
General: Before paving, allow at least the following times to elapse (for curing and initial shrinkage) for these substrates:

- Concrete slabs: 28 days.
- Toppings on slabs: A further 21 days.

3.2 PREPARATION

Trial set-out
General: Prepare a trial paving set-out to each area as follows to:

- Maximise the size of equal margins of cut pavers.
- Locate control joints.
- Note minor variations in joint widths to eliminate cut tiles at margins.

Ambient temperature
General: It the ambient temperature is < 5 or > 35°C, do not lay pavers.

Substrates
General: Ensure substrates are as follows:

- Clean and free of any deposit or finish which may impair adhesion or location of pavers.
- Excessive projections are hacked off and voids and hollows are filled with a cement:sand mix not stronger than the substrate nor weaker than the bedding.

Absorbent substrates: If suction is excessive, control it by dampening but avoid over-wetting and do not apply mortar bedding to substrates showing surface moisture.

Concrete: If not sufficiently rough to provide a mechanical key, roughen by scabbling or the like to remove 3 mm of the surface and expose the aggregate; then apply a bonding treatment.

Fixtures
General: Before paving ensure that fixtures interrupting the surface are accurately positioned in their designed or optimum locations relative to the paving layout.

3.3 PAVING GENERALLY

Variations
General: If necessary, distribute variations in hue, colour, or pattern uniformly, by mixing pavers or paving batches before laying.

Paving joints
Joint widths: Set out pavers to give uniform joint widths of 6 to 12 mm.

Margins
General: Provide whole or purpose-made pavers at margins where practicable, otherwise set out to give equal margins of cut pavers. If margins less than half paver width are unavoidable, locate the cut pavers where they are least conspicuous.

Protection
Traffic: Keep pedestrian and vehicular traffic off paving until the bedding has set and attained its working strength.

Cleaning: Keep the work clean as it proceeds and protect finished work from damage.

3.4 MORTAR BEDDING

Preparation of pavers
Suction: Soak porous pavers in water for half an hour and then drain until the surface water has disappeared.

Bedding
General: Use bedding methods and materials which are appropriate to the paver, the substrate, the conditions of service, and which leave the paver firmly and solidly bedded in the bedding material and adhered to the substrate. Form falls integral with the substrate.

Mortar beds
Substrate preparation: Either lightly dust the screeded bed surface with dry cement and trowel level until the cement is damp, or spread a thin slurry of neat cement, or cement-based thin bed adhesive, on to the tile back. Do not provide mortar after initial set has occurred.

Nominal thickness: Refer to design drawings.

Stone flagging
Sub grade: Compact to 95% of the maximum dry density when tested to AS 1289.

Mortar bed thickness: Minimum 30 mm to maximum 60 mm.

Laying pattern: Random, with smaller stones filling the gaps to produce roughly uniform joint widths.

Lay flags and fill joints in one operation.

Stone setts dry bed
Description: Lay and tamp setts on to a dry sand and cement mix, compact and moisten as follows:

- Bed: 1 cement to 3 sand, screeded to the level required to allow setts to be firmly tamped.
- Select the top side of the sett for surface uniformity and tap into the mix to the pre compaction position.
- Compact with a hand ram or mechanical compactor.
- Water spray the surface and allow the bedding to harden.
- Grout joints.

3.5 ADHESIVE BEDDING

Preparation of pavers
Adhesive bedding: Fix pavers dry.

Bedding
General: Use bedding methods and materials which are appropriate to the paver, the substrate, the conditions of service, and which leave the paver firmly and solidly bedded in the bedding material and adhered to the substrate. Form falls integral with the substrate.

Thick adhesive beds
General: Provide on substrates with deviations up to 6 mm when tested with a 2 m straight edge, and with tiles having deep keys or frogs.

Nominal thickness: 6 mm.

Adhesive bedding application
General: Apply adhesive by notched trowel to walls and floors and direct to pavers if required, to provide evenly distributed coverage of > 90%.after laying.

Pattern of distribution of adhesive: Conform to AS 3958.1 Verify by examining one paver in ten as work proceeds.

Allow the adhesive to cure for the period nominated by the manufacturer before grouting or allowing traffic.

3.6 MOVEMENT JOINTS

General
General: Provide control joints as follows:

- Location:
  - Over structural control joints.
  - At internal corners.
  - Close to external corners in large paved areas.
  - Around the perimeter at abutments.
  - At junctions between different substrates.
  - To divide large paved areas into bays, maximum 5 m wide, maximum area 16 m^2.

. At abutments with the building structural frame and over supporting walls or beams where flexing of the substrate is anticipated.

- Depth of joint: Right through to the substrate.
- Sealant width: 6 – 25 mm.
- Depth of elastomeric sealant: One half the joint width, or 6 mm, whichever is the greater.

Control joint types

Divider strip: A proprietary expansion joint consisting of a neoprene filler sandwiched between plates with lugs or ribs for mechanical keying. Set flush with the finished surface.

Proprietary slide plate divider strip: An arrangement of interlocking metal plates grouted into pockets formed in the concrete joint edges.

Sealant: Two-pack self-levelling flexible mould resistant, one-part silicone or polyurethane sealant applied over a backing rod. Finish flush with the tile surface.

- Floors: Trafficable, shore hardness > 35.

Backing rod: Compressible closed cell polyethylene foam with a bond-breaking surface.

3.7 GROUTED AND SEALANT JOINTS

Grouted joints

General: Commence grouting as soon as practicable after bedding has set and hardened sufficiently. Clean out joints as necessary before grouting.

Face grouting: Fill the joints solid and tool flush. Clean off surplus grout. Wash down when the grout has set. When grout is dry, polish the surface with a clean cloth.

3.8 COMPLETION

Spare pavers

General: Supply spare matching pavers of each type for future replacement purposes. Store the spare materials on site.

Quantity: At least 1% of the quantity installed.

Cleaning

Completion: Clean progressively and leave pavements clean on completion.

Operation and maintenance manuals

General: Submit a manual describing care and maintenance of the tiling, including procedures for maintaining the slip-resistance grading stating the expected life of the slip-resistance grade.

0277 PAVEMENT ANCILLARIES

1 GENERAL

1.1 RESPONSIBILITIES

General
General: Provide ancillary pavement elements as documented.

1.2 CROSS REFERENCES

General
Requirement: Conform to the following:
- *General requirements*.
- Materials and finishes schedule.
- *Precast concrete*.

1.3 STANDARDS

Slip resistance
Classification: To AS/NZS 4586 for new pedestrian surface materials, as tested by wet pendulum, shall be to V.R11.

Slip resistance measurement of existing installations: To AS/NZS 4663.

Luminance
Classification: To AS/NZS 1428.1.

1.4 INTERPRETATION

Definitions
General: For the purposes of this worksection the definitions of AS 1348 and those given below apply.
- Absolute level tolerance: Maximum deviation from design levels.
- Relative level tolerance: Maximum deviation from a 3 m straightedge laid on the surface

1.5 SUBMISSIONS

Samples
Submit samples as follows:
- Stair tread nosing – TGSI 02.

2 PRODUCTS

2.1 STAIR TREAD NOSING

General
Standards: Layout and location to AS 2890.3.

Product: Refer materials and finishes schedule.

3 EXECUTION

3.1 STAIR TREAD NOSING

Installation
To precast concrete stairs: To manufacturer’s requirements.

0278 GRANULAR SURFACES

1 GENERAL

1.1 RESPONSIBILITIES

General

General: Provide base and granular surfacing that are as follows:

- To the level tolerances.
- To the compaction requirements.

1.2 CROSS REFERENCES

General

Requirement: Conform to the following:

- *General requirements*.
- Materials and finishes schedule.

1.3 SUBMISSIONS

Samples

Submit samples as follows:

- River pebble – PV 52.

2 PRODUCTS

2.1 MATERIALS

Base

Description: Fine crushed rock, free of sand and coatings of clay or organic material, and containing not more than 1% disintegrated, weathered, soft fractured, friable or poorly indurated fragments.

Granular surface material

Gravel: Unscreeded natural stone as follows:

- Stone type and source: Refer materials and finishes schedule.

3 EXECUTION

3.1 SUBGRADE

Preparation

Excavation: Cut and trim the subgrade to enable the finished compacted thickness to finish flush with adjacent surfaces.

3.2 BASE

Gravel surfaces

Method: Mechanically spread material to the loose thickness required to produce the documented finished compacted thickness. Do not transport new material over uncompacted material. If the subgrade is disturbed during placing or becomes mixed with new material, remove all contaminated material and replace, regrade and compact.

Moisture: Bring base material to the optimum moisture content before and during placing. Do not add water during compaction except as required to replace evaporation.

3.3 COMPACTION

Subgrade and base

Hand compaction: Condition the material by moisture adjustment before compaction. Compact to 95% of the maximum dry density.

Sampling: To AS 1289.1.2.1.

Testing: To AS 1289.5.1.1, AS 1289.5.3.1 or AS 1289.5.8.1.

3.4 SURFACING

Levels

Tolerance: Finished surface to ± 10 mm from the documented profile.

Gravel

Thickness: Spread loose material screeded to over the compacted base, as per design drawings.

0315 CONCRETE FINISHES

1 GENERAL

1.1 RESPONSIBILITIES

General

General: Provide finishes to formed and unformed concrete surfaces as follows:

- Appropriate to the importance (visual or physical) of the concrete elements.

1.2 CROSS REFERENCES

General

Requirement: Conform to the following:

- *General requirements*.
- Materials and finishes schedule.
- *Concrete formwork*.
- *Concrete in situ*.

1.3 STANDARDS

General

Formed surfaces: To AS 3610.1.

1.4 INTERPRETATIONS

Definitions

General: For the purposes of this worksection, the following definition applies:

- Green concrete: Concrete which has set but not appreciably hardened.

1.5 INSPECTION

Notice

Inspection: Give notice so that inspection may be made of the following:

- Evaluation of the off-form finishes to formwork.

1.6 SUBMISSIONS

Execution documentation

Shop drawings: Submit formwork shop drawings including details of proposed form linings, form bolt positions, form facings, release agents and, where applicable, reuse of formwork.

1.7 TOLERANCES

Surface quality

Formed surfaces: Confirm conformance with the surface finish requirements of AS 3610.1 for the surface class nominated in the **Formed surface finishes schedule**.

Flatness

Unformed surfaces: Confirm conformance with the **Flatness tolerance classes table** for the class of finish nominated using a straight edge placed anywhere on the surface in any direction.

Flatness tolerance class table

Class	Measurement	Maximum deviation (mm)
A	3 m straight edge	3
B	3 m straight edge	6
C	600 mm straight edge	6

1.8 TEST PANELS

General
Conformance: Supply test panels to AS 3610.1 and in conformance with the **Test panels schedule** for the application specified.

Manufacture
General: Cast the panels using the formwork, concrete, compaction equipment, form release agents, curing and formwork removal methods which are to be used in the final work.

Storage
General: Once accepted, maintain the panels on site undamaged and protected from the weather, as reference prototypes for future evaluation of completed work.

1.9 SURFACE TREATMENT

General
Range: Do not proceed with the related work until the acceptable range of surface treatments has been determined.

2 PRODUCTS

2.1 MATERIALS

Surface hardeners, sealants and protectors
Supply: If required by the project documentation, provide proprietary products in accordance with the manufacturer's recommendations.

3 EXECUTION

3.1 SURFACE MODIFIERS

General
Application: Apply to clean surfaces in conformance with the manufacturer's recommendations.

3.2 FORMED SURFACES

General
General: Provide formed concrete finishes in conformance with the materials and finishes schedule and the design drawings.

Damage: Do not damage concrete works through premature removal of formwork.

Curing
General: If forms are stripped when concrete is at an age less than the minimum curing period, commence curing exposed faces as soon as the stripping is completed.

Evaluation of formed surfaces
General: If evaluation of formed surface tolerance or colour is required, complete the evaluation before surface treatment.

Finishing methods
General: If soffits of concrete elements or faces of concrete columns are to have a finish other than off the form, provide details of proposed procedures.

Blasted finishes:

- Abrasive: Blast the cured surface using hard, sharp graded abrasive particles until the coarse aggregate is in uniform relief.
- Light abrasive: Blast the cured surface using hard, sharp graded abrasive particles to provide a uniform matt finish without exposing the coarse aggregate.

Bush hammered finish: Remove the minimum matrix using bush hammering to expose the coarse aggregate, recessing the matrix no deeper than half the aggregate size, to give a uniform texture.

Exposed aggregate finish: Remove the vertical face forms while the concrete is green. Wet the surface and scrub using stiff fibre or wire brushes, using clean water freely, until the surface film of mortar is mechanically removed, and the aggregate uniformly exposed. Do not use acid etching. Rinse the surface with clean water.

Floated finishes:

- Sand floated finish: Remove the vertical face forms while the concrete is green. Wet the surface and rub using a wood float. Rub fine sand into the surface until a uniform colour and texture are produced.
- Grout floated finish: Remove the forms while the concrete is green. Dampen the surface and spread a slurry, using hessian pads or sponge rubber floats. Remove surplus slurry and work until a uniform colour and texture are produced.

Smooth rubbed finish: Remove the vertical face forms while the concrete is green. Wet the surface and rub using a carborundum or similar abrasive brick until a uniform colour and texture are produced.

Surface repairs

Surface repair method: If surface repairs are required, submit proposals.

3.3 UNFORMED SURFACES

General

General: Strike off, screed and level slab surfaces to finished levels, to the tolerance class noted in the materials and finishes schedule and the design drawings.

Surface finishes

General: Provide surface finishes in conformance with the materials and finishes schedule and the design drawings.

Surface repairs

Surface repair method: If surface repairs are required, submit proposals.

Finishing methods – primary finish

Machine float finish:

- After levelling, consolidate the surface using a machine float.
- Cut and fill and refloat immediately to a uniform, smooth, granular texture.
- Hand float in locations inaccessible to the machine float.

Steel trowel finish: After machine floating finish as follows:

- Use power or handsteel trowels to produce a smooth surface relatively free from defects.
- When the surface has hardened sufficiently, retrowel to produce the final consolidated finish free of trowel marks and uniform in texture and appearance.

Burnished finish: Continue steel trowelling until the concrete surface attains a polished or glossy appearance, uniform in texture, appearance and free of trowel marks and defects.

Wood float finish: After machine floating use wood or plastic hand floats to produce the final consolidated finish free of float marks and uniform in texture and appearance.

Broom finish: After machine floating and steel trowelling draw a broom or hessian belt across the surface to produce a coarse even-textured transverse-scored surface.

Scored or scratch finish: After screeding, give the surface a coarse scored texture using a stiff brush or rake drawn across the surface before final set.

Sponge finish: After machine floating and steel trowelling, produce an even textured sand finish by wiping the surface using a damp sponge.

Finishing methods – supplementary finish

Abrasive blast: After steel trowelling, abrasive blast the cured surface to provide texture or to form patterns without exposing the coarse aggregate using hard, sharp graded abrasive particles.

Coloured applied finish: To a machine float finished surface, apply a proprietary liquid or dry shake material in conformance with the manufacturer’s recommendations and trowel to achieve the required appearance.

Exposed aggregate: After steel trowelling, grind the cured surface of the concrete to expose the coarse aggregate.

0316 PRECAST CONCRETE

1 GENERAL

1.1 RESPONSIBILITIES

General

General: Provide precast concrete elements that are:

- Fabricated in conformance with the shop drawings.
- Designed and certified by a professional engineer.
- Designed for handling, transport and erection by a professional engineer.
- Undamaged by handling and installation.
- Certified by a professional engineer after erection.

1.2 CROSS REFERENCES

General

Requirement: Conform to the following:

- *General requirements*.
- Materials and finishes schedule.
- *Concrete pavement.*
- *Pavement ancillaries.*
- *Concrete finishes.*

1.3 STANDARDS

General

Precast members: Conform to the recommendations of NP:PCH (Precast concrete handbook).

Transport, erection and installation: To AS 3850.

Structural design: To AS 3600 and BCA B1.1.

Precast flooring: To AS 3600 and AS/NZS 1170.

Slip resistance: To AS/NZS 4586.

Slip resistance measurement of existing installations: To AS/NZS 4663.

1.4 INTERPRETATION

Abbreviations

General: For the purposes of this worksection the following abbreviations apply:

WLL: Working Load limit.

Definitions

General: For the purposes of this worksection the definitions given in AS 3850 clause 1.3 and the following apply:

- National code: National code of practice for precast, tilt-up and concrete elements in building construction.
- Precast concrete: Concrete building elements, cast in moulds and cured away from the final structural position, and then transported, lifted and fixed into position.

1.5 INSPECTION

Notice

Inspection: Give notice so that inspection may be made of the following:

- Formwork dimensions and stability.
- Panel edge details and penetrations.
- Connection materials and inserts in place.
- Reinforcement and/or prestressing tendons in place.

- Concreting.
- First precast unit of each type at the earliest possible time before and immediately after stripping.
- Stripping and storage.
- Site erection including fixings, in situ topping.
- Installed temporary bracing.
- Final structure before removal of temporary bracing.

1.6 TOLERANCES

General

Position of reinforcement and tendons: To AS 3600 clause 17.5.3.

Manufacturing tolerance for precast elements: To AS 3610.1 Table 3.3.3. and AS 3850 clause 3.11.

Fixings and embedded items in precast units: To AS 3850 Table 3.11(B) and AS 3610.1 Table 3.3.3.

1.7 SUBMISSIONS

Calculations

Design: Submit structural performance calculations.

Design

Contractor design: Provide independent verification by a professional engineer of conformance of the design to project criteria.

Drawings

Precast concrete drawings: Submit shop drawings of architectural and structural precast concrete showing the proposed details for their design, manufacture, assembly, transport and installation, including the following:

- Project title and manufacturer's name.
- Marking plans and elevations referenced to the building grids and floors to locate each precast unit.
- Shape or profile drawings (submit these before fabrication of moulds and tooling).
- Concrete mix and type of cement if special-class concrete.
- Locations, sizes, details, materials, ductility and stress grades of tendons and reinforcement.
- Locations, sizes, details, materials, corrosion protection and grades of cast-in ferrules, locating plates and angles, cut outs and openings, bolts, anchors and lifting devices.
- Cast-in services.
- Site fitments.
- Details of all joints caulking, baffles and waterproofing.
- Surface finish class and surface treatment, if applicable.
- Curing and protection methods.
- Weights of units.
- Calculated maximum loadings on lifting and bracing inserts and attachments.
- Equipment and methods for handling, transport and installation, including lifting inserts and pick-up points.
- Evidence of load capacity of lifting and bracing inserts and attachments in the form of test reports or calculations.
- Specification of plugs for sealing recesses for cast-in fixings.

Execution details

Panel casting: Submit panel casting checklist.

Manufacturer’s details: Submit name, contact details and credentials of proposed manufacturer of precast concrete units.

Safe work method statement: Prepare a safe work method statement specific to the project for the precast erection and submit on request.

Erection documentation: Submit lifting device locations and specification including marking plans and shop drawings.

Early lifting: If it is proposed to lift the units by their designated lifting points before 28 day strength has been achieved, submit evidence to demonstrate that the unit has adequate strength to carry its own weight without damage or residual cracking or deflection on removal of the lifting device.

Lifting and handling equipment: Submit details of proposed equipment along with qualifications and training of the operating personnel in the form of a qualification register.

Products

Protective coating details: Submit proposals for protective coatings to exposed metallic components to AS/NZS 2312 with regard to site-specific corrosivity zoning.

Colour: Provide details of method of achieving the selected colour including details of the type and colour of the cement, sand and aggregates as well as colouring oxide pigments or stain.

Proprietary documentation: Submit proprietary documentation for any lifting, bracing, fixing inserts. Include make, type and WLL.

Non proprietary inserts: Submit certificate from a professional engineer.

Concrete mix: Submit concrete mix details including the proportions and source of the constituents, admixtures, release agents, curing compounds.

Samples

Submit samples as follows:

- Precast concrete stair – ST 01.

Surface finish: Submit samples for texture and colour.

Sample size: One (1) piece.

Tests

Lifting inserts and attachments for precast units: Submit test results.

Structural performance: Submit test results of prior testing for static load tests.

Static load tests: If structural performance requirements are nominated for the precast unit, perform static load tests on the prototype to AS 3600.

2 PRODUCTS

2.1 CONSTITUENT MATERIALS

General

Stockpile: If precast elements are required to have uniform and consistent colour, stockpile sand, cement and aggregates proposed to be used.

Cement

Standard: To AS 3972.

Type: Do not use high alumina cement.

Aggregates

Standard: To AS 2758.1.

Aggregate properties: Refer to materials and finishes schedule.

Special aggregates: Stockpile special aggregates at the beginning of the project to minimise colour and other variations.

Water

Standard: To AS 1379.

Quality: Use clean water, free from oil, acid, alkali, organic or vegetable matter and with not more than 500mg/l of chloride ions.

Other

Chemical admixtures: To AS 1478.1.

Pigments: Ensure that the pigments are:

- Chemically inert.
- Alkaline resistant.
- Insoluble.
- Light-fast.

Reinforcement
Standard: To AS/NZS 4671.

General: Clean and free from harmful matter e.g. loose mill scale, loose rust, oil, grease and retarders, ensure there is no pitting.

Structural welding: To AS/NZS 1554.3.

Corrosion: Protect from corrosion in conformance with AS 3600 clause 17.2.1.2.

Prestressing tendons
Standard: To AS/NZS 4672.1.

- Type: 7 wire, stress relieved, high tensile steel and strand.

Prestressing hardware (including ducts, anchorages): To AS 3600.

Welding tendons: Do not weld prestressing tendons.

2.2 PRECAST CONCRETE

General
Concrete: To AS 3600 and AS 1379.

Testing: To AS 1012.

Durability
Concrete cover: To AS 3600.

Strength
Minimum compressive strength: To engineer's requirements.

Finishes
General: Refer to materials and finishes schedule.

3 EXECUTION

3.1 PRECAST UNITS

Marking
Plank/panel identification: Include the following:

- Plank thickness (mm).
- Number of strands.
- Strand diameter (mm).
- Concrete cover (mm).
- Remain legible until after the unit has been fixed in place.
- Not visible in the completed structure.
- Show the date of casting.
- Show the correct orientation of the unit.
- On other than units manufactured as a standard product, indicate the locations within the structure in conformance with the marking plan.
- Show the weight of the unit.

Attachments for structural or architectural fixings
Ferrules: Provide ferrules anchored behind the reinforcing as shown on the drawings.

Dowel bars: Provide dowel bars loose, cast in or screwed into a ferrule or coupler and projecting from the precast unit. Alternatively, where dowels are cast into and project from in situ concrete, provide a mating sleeve without tube.

Grout tube: Provide grout tubes as documented, made from thin wall galvanized duct or similar cast into either in situ concrete or the precast unit into which a dowel bar will be grouted.

Cast in plates and bolts: Provide purpose made steel brackets with bars, bolts or studs welded to them.

Support and fixings: Provide supporting brackets (loose or cast-in), ferrules, double inserts, bolts, nuts, packers and washers.

Restraint brackets: Provide all support or restraint brackets for the precast units as documented or as required.

Starter bars: Provide all starter bars as documented.

Welding of connections: To AS/NZS 1554.

Cast in: Cast in all lifting, bracing and fixing inserts.

External walls: Wall panels and connections to BCA C1.11.

Curing

Curing compounds: To AS 3799.

Release agent: Provide a release agent that is compatible with the curing compound.

Rejection

Assessment: Set aside for inspection any unit having damage such as cracking, deformation or spalling, or exhibiting lack of adequate concrete cover. Repair or recast as instructed.

Lifting points

Standard: To AS 3850.

Cast in inserts: Provide hot-dipped galvanizing finish with a minimum coating mass of 600 g/m^2 to all cast-in lifting and bracing devices.

Bracing inserts or strongbacks: Provide bracing inserts or strongbacks designed by a professional engineer.

Proprietary systems: Use in conformance with manufacturer's specifications and recommendations.

Lifting loops: Do not use deformed bars or stressing tendons as lifting loops.

Sealing: Recess lifting attachments such as bracing ferrules, or other types of cast-in fixings, and provides plugs for sealing.

Location: Do not place lifting attachments, holes and other temporary fixings for handling purposes on visible faces of units.

Marking: Clearly mark all lifting points and the positions for temporary bearing for storage and transport.

Welding: Do not site-weld lifting, bracing or fixing inserts.

Lifting or supporting members: Only at specified points.

Lifting devices: Do not use the fixing devices for lifting or hoisting unless they have been designed to do so and confirmed by a professional engineer.

Precautions: Use handling methods which do not overstress, warp or damage the units.

After erection: Remove, seal and make good temporary attachments.

General: Provide proprietary lifting devices with published load data designed specifically for lifting concrete elements. Use face and edge lifters as required.

Storage

Support points: Support elements at designated support points during storage.

Prevent damage: Store units to prevent warping, twisting, crushing, cracking and staining.

Protection: Protect the units against staining, discolouration and other damage until they are installed in their final location.

3.2 INSTALLATION

Lifting and Handling

Lifting and handling: Conform to the National code and AS 3850.

Site conditions: Ensure the wind and temperature conditions allow handling and fixing, and are consistent with the structural capability and geometry of the element.

Site Cranes: To AS 2550.

Temporary bracing and propping: To AS 3850 and AS/NZS 1170.2.

Fixing

Fixing: Fix the units securely and accurately in their final positions.

Ancillaries: Provide components and materials, including fasteners, braces, shims, jointing strips, sealant, flashings, grout and mortar, bearing pads or strips, ties and dowels, clips and fixings necessary for the installation of the units.

Tolerances: To AS 3850 clause 3.11.

Surfaces bonded to in situ concrete

Surfaces bonded to concrete: Fully scabble and roughen all surfaces required to bond with in situ concrete to achieve a shear plane surface coefficient in conformance with Table 8.4.3 of AS 3600.

3.3 TESTING

Compliance

Tolerances: Check element compliance with **Tolerances** in conformance with AS 3610.1 Section 5.

Rejection: Reject any precast panels not conforming to the tolerances.

0331 BRICK AND BLOCK CONSTRUCTION

1 GENERAL

1.1 RESPONSIBILITIES

General
General: Provide brick and block construction as documented.

1.2 CROSS REFERENCES

General
Requirement: Conform to the following:
- *General requirements*.
- Materials and finishes schedule.
- *Landscape – walling and edging.*

1.3 STANDARD

General
Materials and construction: To AS 3700.

1.4 INTERPRETATION

Definitions
General: For the purposes of this worksection the definitions in AS 3700 clause 1.5.2 and those given below apply:
- Brick: A masonry unit that does not exceed 338 mm long x 225 mm wide x 113 mm high, of a size that allows it to be picked up with one hand while the other is used to apply mortar with a trowel.
- Block: A masonry unit exceeding the size of a brick in any dimension, for use in the construction of walls or partitions.
- Brickwork and blockwork types:
  . Common or ordinary: Brickwork and blockwork which is not tested for specified strength values, is not especially treated for texture and colour and can include reject face units.
  . Face units: Bricks or blocks used in facework, including purpose-made units such as squints, sills and thresholds.
- Facework: Brickwork or blockwork in which the form, or form and colour, of the face units and joints is visible in the completed works.

1.5 INSPECTION

Notice
Inspection: Give notice so that inspection may be made of the following:
- Set out.
- Unit type, colour and texture.

1.6 TESTS

Durability
Mortar: Mortar durability tests are required.
Conformance: Test to verify conformance as follows:
- Standard: To AS 3700 Appendix FA.
- Acceptance criteria:
  . Class M2: 0.5 mm.
  . Class M3: 0.3 mm.
  . Class M4: 0.1 mm.

Special masonry
Conformance: Test to verify conformance as follows:

- Compressive strength: To AS 3700 Appendix C.
- Flexural strength: To AS 3700 Appendix D.

1.7 SUBMISSIONS

Brick or block unit samples
Face units: Submit face units of each type illustrating the range of variation available, including colour, texture, surface irregularities, defective arrises, and shape.
- Number of each type: 6.

Facework sample panels
General: Provide, in a suitable position, a sample panel of each type of facework including pigmented face or pointing mortar.
- Minimum size (face of panel): 1200 mm high x 1190 mm or closest unit module long.

1.8 TOLERANCES

Masonry construction
Conformance: Conform to AS 3700 Table 11.1.

2 PRODUCTS

2.1 MATERIALS

Bricks and blocks
Standard: To AS/NZS 4455.1and AS/NZS 4455.3.

Salt attack resistance grade: To AS 3700 Table 5.1.
- Bricks and blocks: Below damp-proof course, and in external leaves in the corrosivity categories D and F, provide Exposure grade to AS/NZS 4455.1 Table 2.3 or AS/NZS 4455.3 Table 2.4, as appropriate.

Minimum age of clay bricks: 7 days.

Mortar materials
Durability classification.
- Above the damp-proof-course: Conform to the **Corrosion resistance and durability table**.
- Below the damp-proof-course: M4 mortar conforming to the **Mortar mix table** .

Admixtures: To AS 3700clause 10.4.2.4.

Lime: To AS 1672.1.

Cement: To AS 3972.
- Type: GP.

Masonry cement: To AS 1316.

Proportions: Conform to the **Mortar mix table**.

Sand: Fine aggregate with a low clay content and free from efflorescing salts, selected for colour and grading.

Water: Clean and free from any deleterious matter.

White cement: With ≤ 1% iron salts content.

Pigment: To BS EN 12878, and as follows:
- Quantity: Less than 10% of the mass of cement in the mix.

For light colours: Use off-white cement in the mix.

Mortar mix table

Mortar class to AS 3700	Cement, lime, sand ratios (by volume)			Water thickener
	Clay	Concrete	Calcium silicate	
Masonry cement				
M3	1:0:4	1:0:4	n/a	No
M4	1:0:3	n/a	n/a	No

Cement (GP/GB)				
M2	1:2:9	n/a	n/a	No
M3	1:1:6	1:1:6	n/a	Optional
1:0:5	1:0:5	1:0:5	Yes	
M4	1:0.5:4.5	1:0.5:4.5	n/a	Optional
1:0:4	1:0:4	1:0:4	Yes	

2.2 COMPONENTS

Wall ties

Standard: To AS/NZS 2699.1.

Type: A.

Durability Classification to AS/NZS 2699.1.

Corrosive protection: To AS/NZS 2699.3.

Strength classification:

- Masonry veneer: to engineer's documentation.

Connectors and accessories

Standard: To AS/NZS 2699.2.

Corrosive resistance and durability: Conform to the **Corrosion resistance and durability table**.

Flexible masonry ties: If accommodation of movement is required at control joints and where masonry abuts structural elements such as column faces and slab soffits, provide details.

Corrosion resistance and durability

Compliance: Conform to the **Corrosion resistance and durability table(s)**, or provide proprietary products with metallic and/or organic coatings of equivalent corrosion resistance and as follows:

- Galvanizing: To AS/NZS 4680 .
- Built-in products below damp proof course: Stainless steel 316 or engineered polymer.

Corrosion resistance and durability table – Atmospheric corrosivity category – A and B to AS/NZS 2312

Situation	Steel lintels (each surface)	Wall ties, connectors and other structural steel accessories above damp proof course (each surface)	Minimum mortar classification above damp proof course
External (including cavity air space)	Galvanize after fabrication 300 g/m^2	- Galvanize after fabrication 300 g/m^2 - Metallic-coated sheet Z600 - Galvanized wire 470 g/m^2	M2

Corrosion resistance and durability table – Atmospheric corrosivity category – C to AS/NZS 2312

Situation	Steel lintels (each surface)	Wall ties, connectors and other structural steel accessories above damp proof course (each surface)	Minimum mortar classification above damp proof course
External (including cavity air space)	Galvanize after fabrication 600 g/m^2	- Galvanize after fabrication 600 g/m^2 - Galvanized wire 470 g/m^2	M3

Corrosion resistance and durability table – Atmospheric corrosivity category – D and F to AS/NZS 2312

Situation	Steel lintels (each surface)	Wall ties, connectors and other structural steel accessories above damp proof course (each surface)	Minimum mortar classification above damp proof course
External (including cavity air space)	- Stainless 316 - Galvanize after fabrication 600 g/m^{2}plus organic coating [1]	- Stainless 316 - Engineered polymer	M4
[1] Avoid organic coating in Category F zones.			

Flashings and damp-proof courses
Standard: To AS/NZS 2904.

3 EXECUTION

3.1 GENERAL

Mortar mixing
General: Measure volumes accurately to achieve the documented proportions. Machine mix for at least six minutes.

Protection from contamination
General: Protect masonry materials and components from ground moisture and contamination.

Bond
Type: Stretcher bond.

Building in
Embedded items: Build in wall ties and accessories as the construction proceeds. If it is not practicable to obtain the required embedment wholly in the mortar joint in hollow unit brickwork or blockwork, fill appropriate cores with grout or mortar.

Steel door frames: Fill the backs of jambs and heads solid with mortar as the work proceeds.

Clearance for timber frame shrinkage
General: In timber frame brick veneer construction, leave clearances between window frames and brick sill and between roof frames and the brick veneer as follows:

- Additional clearance: To accommodate additional shrinkage of unseasoned floor timbers.
- Single storey frames and ground floor windows (not for slab on ground): 10 mm.
- Two storey frames and upper floor windows: 20 mm.

Construction at different rates or times
Monolithic structural action: If two or more adjoining sections of masonry, including intersecting walls, are constructed at different rates or times, rake back or tie the intersections between those sections so that monolithic structural action is obtained in the completed work.

Joining to existing
General: Provide a control joint where joining to existing structures. Do not tooth new masonry into existing work.

Mortar joints
Solid and cored units: Lay on a full bed of mortar. Fill perpends solid. Cut mortar flush.

Face-shell bedded hollow units: Fill perpends solid. Cut mortar flush.

Finish: Conform to the following:

- Externally: Tool to give a dense water-shedding finish.
- Internally: If wall is to be plastered, do not rake more than 10 mm to give a key.
- Thickness: 10 mm.

Cutting: Set out masonry with joints of uniform width and the minimum of cutting of masonry units.

Monolithic structural action

General: Provide brick or block header units, except in stretcher bond facework, to AS 3700 clause 4.11.2.

Spacing: 600 mm maximum.

Location: Conform to the following:

- At engaged piers.
- At engagement of diaphragms with the leaves in diaphragm walls.
- At intersections of flanges with shear walls.
- At intersections with supporting walls and buttresses.
- Between leaves in solid masonry construction.

Rate of construction

General: Regulate the rate of construction to eliminate joint deformation, slumping or instability.

Rods

Set out: Construct masonry to the following rods:

- 75 mm high units: 7 courses to 600 mm.
- 90 mm high units: 6 courses to 600 mm.
- 190 mm high units: 3 courses to 600 mm.

Protection

General: Keep the top surface of brickwork and blockwork covered to prevent the entry of rainwater and contaminants.

Temporary support

General: If the final stability of the brickwork or blockwork is dependent on (structural) elements to be constructed after the brickwork or blockwork, provide proposals for temporary support or bracing.

3.2 FACEWORK

Cleaning

General: Clean progressively as the work proceeds to remove mortar smears, stains and discolouration. Do not use an acid solution. Do not erode joints if using pressure spraying.

Colour mixing

Distribution: In facework, distribute the colour range of units evenly to prevent colour concentrations and banding.

Commencement

General: Commence at least 1 full course for blockwork, or 2 full courses for brickwork, below adjacent finished surface level.

Double face walls

Selection: Select face units for uniform width and double-face qualities.

Preferred face: Before starting, obtain a ruling as to which is the preferred wall face, and favour that face should a compromise be unavoidable.

Perpends

General: If it is proposed to use other than vertically aligned perpends in alternate courses, provide details.

Sills and thresholds

General: Solidly bed sills and thresholds and lay them so that the top surfaces drain away from the building.

Set out: Set out so that no unit is cut smaller than three quarters full width.

3.3 WALL TIES

Location

General: Space wall ties in conformance with AS 3700 clause 4.10 or BCA Figure 3.3.3.1 or AS 4773.2, as appropriate, and at the following locations:

- Not more than 600 mm in each direction.

- Adjacent to vertical lateral supports.
- Adjacent to control joints.
- Around openings.

Installation

Embedment: At least 50 mm into mortar making sure that mortar cover is 15 mm minimum to the outside face of the mortar.

3.4 CONTROL OF MOVEMENT

Joints

General: To AS 3700.

Filler material: Provide compatible sealant and bond breaking backing materials which are non-staining to masonry. Do not use bituminous materials with absorbent masonry units.

- Bond breaking materials: Non-adhesive to sealant, or faced with a non-adhering material.
- Foamed materials: Closed-cell or impregnated, not water-absorbing.

Joint filling:

- Installation: Clean the joints thoroughly and insert an easily compressible backing material before sealing.
- Sealant depth: Fill the joints with a gun-applied flexible sealant for a depth of at least two-thirds the joint width.

Fire rated control joints

General: If a control joint occurs in an element of construction required to have a fire resistance rating, construct the control joint using fire stopping materials so that the fire resistance rating of the element is not reduced.

Fire stopping: To AS 4072.1.

0332 STONE MASONRY

1 GENERAL

1.1 RESPONSIBILITIES

General

General: Provide stone masonry elements as follows and as documented.

- Of uniform quality within any grade.
- Selected for the optimum matching of visual properties such as colour and pattern.
- Sound and free from defects liable to affect its strength, appearance and durability under the intended conditions of use.

1.2 CROSS REFERENCES

General

Requirement: Conform to the following:

- *General requirements*.
- Materials and finishes schedule.
- *Landscape – walling and edging.*

1.3 STANDARD

General

Masonry: To AS 3700.

1.4 INSPECTION

Notice

Inspection: Give notice so that inspection may be made of the following:

- Proposed stone source (quarry, storage yard).
- Proposed mason's yard.
- Materials stored at the yard or on site.
- The prepared stone sample range.
- Stone in worked condition at the mason's yard.
- Stone laid out before fixing.
- Substrate prepared to receive the specified stonework.
- Control joints ready for insertion of joint filler.

1.5 TESTS

Stone

General: Obtain test samples, representative of each required type of stone, and have the tests carried out at the following stages:

- Before awarding a stone supply contract.
- On dimension stone prepared for the works, at intervals during the course of the works.

Natural stone tests schedule

Property to be tested	Test standard	Test criterion (if not in the test standard)	Number and frequency of tests
Unconfined compressive strength (dry and saturated): - Intact rock core specimens - Dimension stone	ASTM D7012 ASTM C170		
Surface absorption rate	ASTM C97		

Property to be tested	Test standard	Test criterion (if not in the test standard)	Number and frequency of tests
Porosity	ASTM C97		
Wet and dry density	ASTM C97		
Modulus of rupture	ASTM C99		
Flexural strength	ASTM C880		

1.6 SAMPLES

Stone samples
Number: 3.

Stone units: For each type and grade of stone, submit samples of each stone unit (e.g. block, panel, tile):

- The full size of the unit.
- Showing the expected range of variation of colour, pattern, texture, and surface finish in stone to be supplied.

Associated materials and products
Accessories: Submit 2 samples of each accessory proposed for fixing stonework.

Marking
General: Label samples for identification. Label natural stone samples to show the quarry source, section, bed and lift.

1.7 PROTOTYPES

General
Self-supported stonework: Provide a sample wall section consisting of at least 2 courses of masonry, each at least 1500 mm long, and including the following:

- Corner stones or quoins.
- Capping stones.
- Joint finishes (including mortar pointing and sealant).

1.8 SUBMISSIONS

Subcontractors
General: Submit name and contact details of proposed specialist stoneworker.

Design
Bird proofing: Submit details of the proposed method together with evidence of proven performance including addresses of existing installations, date of installation, contact personnel at the installation addresses, brief history of the installations, and current performance data.

Materials
Proposed mortar mix: Submit details of the proposed mix, at least 7 days before commencing stonework.

Supplier’s data: Submit statements from the stone supplier, with the following information:

- The supplier’s experience in the required type of work.
- Production capacity for material of the required type, sizes and quantity.
- Particulars of established quality control procedures (if any), and the category of the procedures to the relevant standard.
- The physical properties of the required material.
- Lead times for delivery of the material to the site.

Shop drawings
General: Submit shop drawings showing the following where applicable:

- Projecting courses.
- Cutting details for mouldings such as lintels, sills, steps and cornices.
- Stonework setting out.

- Position and identifying number of each stone.
- Dimensions of each stone and lay of natural bed.
- Lifting detail and fixing detail of each stone.
- Proposed dowel restraints for column and mullion joints.

Execution
Supervision: Submit the names and qualifications of proposed bench masons.

1.9 TOLERANCES

Dimension stone units
Maximum deviation from required dimensions:
- Loadbearing stone: ± 2 mm.
- Other stone: ± 10 mm.

Masonry construction
Conformance: Conform to AS 3700 Table 11.1.

2 PRODUCTS

2.1 NATURAL STONE

General
General: Conform to the accepted samples and prototypes.

Stone types
Sandstone defects: Minor shale laminae or interbeds and minor concentrations of carbonaceous material (tea leaves) are acceptable in visible faces at ground level or in public areas. Neither defect is acceptable in carved or moulded work.

Granite: Igneous stone (e.g. granite) obtained from quarry stone extracted in blocks sufficiently large to suit the project requirements, and containing no more than a small degree of microcracking.

Stone selection
Grading: Select stone of the designated quality grade.

Matching: Within each grade, select stone for the optimum matching of visual properties such as colour and pattern.

2.2 MORTAR

Mortar materials
Cement type to AS 3972: GP.

White cement: Iron salts content ≤ 1%.

Masonry cement: To AS 1316.

Lime: To AS 1672.1.

Sand: Fine aggregate with no clay content, free from efflorescing salts and selected for colour and grading.

Admixtures: Do not provide admixtures.

Water
General: Clean and free from any deleterious matter.

Mortar mix
Batching: Batch by weight and machine mix.

Mix compressive strength: ≤ compressive strength of the stone bedded on it.

Mix permeability: ≥ stone permeability.

Preparing lime putty:
- Using hydrated lime: Add lime to water in a clean container and stir to a thick creamy consistency. Leave undisturbed for at least 16 hours. Remove excess water and protect from drying out.
- Using quicklime: Run to putty as soon as possible after receipt of quicklime. Partly fill clean container with water, add lime to half the height of the water, then stir and hoe ensuring that no lime remains exposed above the water. Continue stirring and hoeing for at least 5 minutes after all

reaction has ceased, then sieve into a maturing bin. Leave undisturbed for at least 14 days. Protect from drying out. Take appropriate safety measures.

Sand stockpile

General: Before commencing stonework, stockpile sand sufficient for the whole of the works. Keep stockpiled sand dry.

2.3 COMPONENTS

Wall ties

Standard: To AS/NZS 2699.1.

- Type: A.

Classification

Durability classification to AS/NZS 2699.1.

Conformance; Provide ties in conformance with the **Wall ties category table**.

Wall ties category table

Classification to AS/NZS 2699.1 (Type A)	Service conditions
Light duty	Normal cavity construction
Medium duty	Tie bonding at abutments
Heavy duty	Cavities > 60 mm wide

Corrosion protection: To BCA Table 3.3.3.1.

Corrosion resistance and durability

Compliance: Conform to the **Corrosion resistance and durability tables**, or provide proprietary products with metallic and/or organic coatings of equivalent corrosion resistance:

- Galvanize: To AS/NZS 4680.
- Built-in products below damp proof course: Stainless steel 316 or engineered polymer.
- Mortar: Below damp-proof course provide mortar grade M4.

Corrosion resistance and durability table – Atmospheric corrosivity category – A and B to AS/NZS 2312

Situation	Steel lintels (each surface)	Wall ties, connectors and other structural steel accessories above damp proof course (each surface)	Minimum cement content (mortar grade) above damp proof course
External	Galvanize after fabrication 600 g/m^2	- Galvanize after fabrication 300 g/m^2 - Metallic-coated sheet Z600 - Galvanized wire 470 g/m^2	M2

Corrosion resistance and durability table – Atmospheric corrosivity category – C to AS/NZS 2312

Situation	Steel lintels (each surface)	Wall ties, connectors and other structural steel accessories above damp proof course (each surface)	Minimum cement content (mortar grade) above damp proof course
External	Galvanize after fabrication 600 g/m^2	- Galvanize after fabrication 600 g/m^2 - Galvanized wire 470 g/m^2	M3

Corrosion resistance and durability table – Atmospheric corrosivity category – D and F to AS/NZS 2312

Situation	Steel lintels (each surface)	Wall ties, connectors and other structural steel accessories above damp proof course (each surface)	Minimum cement content (mortar grade) above damp proof course
External	- Stainless 316 - Galvanize after fabrication 600 g/m^2 plus organic coating [1]	- Stainless 316 - Engineered polymer	M4
[1] Avoid organic coating in Category F zones.			

Connectors and accessories
Standard: To AS/NZS 2699.2.

Flexible masonry ties: If accommodation of movement is required at control joints and where masonry abuts structural elements such as column faces and slab soffits, provide details.

Flashings and damp-proof courses
Standard: To AS/NZS 2904.

3 EXECUTION

3.1 GENERAL

Mortar mixing
General: Measure volumes accurately to achieve the specified proportions. Machine mix for at least six minutes.

Protection from contamination
General: Protect masonry materials and components from ground moisture and contamination.

Bond
Type: Stretcher bond.

Building in
Embedded items: Build in wall ties and accessories as the construction proceeds.

Construction at different rates or times
Monolithic structural action: If two or more adjoining sections of masonry, including intersecting walls, are constructed at different rates or times, rake back or tie the intersections between those sections so that monolithic structural action is obtained in the completed work.

Joining to existing
General: If jointing to existing work is required, provide a straight joint. Do not tooth new masonry into existing work.

Joints
Finish:

- Externally: Tool to give a dense water-shedding finish.
- Thickness: 10 mm.

Cutting: Set out joints of uniform width and minimise cutting.

Rate of construction
Regulate the rate of construction to eliminate joint deformation, slumping or instability.

Weather protection
General: Keep the top surface of stonework covered to prevent the entry of rainwater.

3.2 BENCH MASON

Supervision
General: Arrange to have on site a bench mason qualified to supervise stonework fixing and site adjustments to joints and surface finishing.

3.3 WORKMANSHIP GENERALLY

Storing
General: Store stone so that it is protected from the weather and atmospheric pollution, clear of the ground on its natural bed, on supports which do not locally overstress it, and in conditions suitable to promote good seasoning without staining, marking or damage.

Cutting
General: Perform the necessary cutting and shaping of stone to designated profiles including weathering, jointing, chasing, forming grooves and drilling for handling and fixing. Work the bed, face and back joints of the stone square and true.

Carving and moulding
General: Achieve a clean sharp finish.

Visual variations
General: If the accepted samples and prototype panels have a range of variation in colour, pattern, texture or surface finish, distribute the production panels throughout the work so that local concentrations of similar variations do not occur.

3.4 LAYING UNITS

Bedding
General: Remove dust and foreign material from the bedding surfaces. If necessary adjust the moisture content of the stone units so that adverse effects, such as reduced bond, are kept within acceptable limits. Where possible, bed and joint the stone in one operation. Lay each stone on a full bed of mortar. Solidly fill vertical joints, joggles and cramps as the work proceeds. Point up joints around flashings as necessary.

Temporary support
General: Provide support as necessary to the stone while the mortar is curing, using bracing, joint spacers, or both.

Bracing and joint spacers: Non-damaging and non-staining softwood wedges or laths soaked in water. Do not allow metal pinch bars to bear directly on the stone.

Later construction: If the final stability of the stonework is dependent on (structural) elements to be constructed later, provide proposals for temporary support or bracing.

Raking and toothing
General: Raise advanced work no more than 1.5 m above the general level, and rake back. Do not tooth stonework for subsequent additions except where toothing is shown on the drawings.

Bonding
General: Bond the masonry so as to provide stability and monolithic structural action to the stonework assembly.

3.5 FIXINGS

Provision of fixings
General: If the necessary fixings for stonework are not otherwise provided as part of the structure provide suitable fixings sufficient to support and restrain each stone and effectively resist the loads from permanent, imposed, wind and earthquake actions to which it will be subjected in service.

Metals for fixings
General: Provide metal fixings that are:

- Corrosion resistant e.g. non-ferrous metal or stainless steel.
- Stamped for identification.
- Compatible with the materials with which they will be in contact or effectively insulated from electrochemical reaction with incompatible materials.

3.6 WALL TIES

Location
Provide wall ties spacing in conformance with AS 3700 clause 4.10 Wall ties or BCA Figure 3.3.3.1 as follows:

- Not more than 600 mm in each direction.
- Adjacent to vertical lateral supports.

- Adjacent to control joints.
- Around openings.

Installation
Embedment: At least 50 mm into mortar ensuring that mortar cover is 15 mm minimum to the outside face of the mortar.

3.7 JOINTING AND POINTING

General
General: Carry out jointing and pointing simultaneously to form a homogeneous bed.

3.8 CONTROL OF MOVEMENT

Joints
Requirement: Provide joints as follows:
- Maximum length of continuous wall: 6 m.
- Maximum vertical spacing: 8 m.
- Width of vertical joint: ≥ 10 mm ≤ 20 mm.
- Width of horizontal joint: ≥ 15 mm ≤ 20 mm.

3.9 SURFACE TREATMENTS

Abutting surfaces
General: Seal concealed faces of stone walling or facing panels where they abut brickwork or concrete.

Dissimilar stones
Isolation: Isolate contact surfaces of dissimilar types of stone with a membrane. Isolate sedimentary stonework from brickwork and other masonry to prevent salts movement.

3.10 COMPLETION

Maintenance manual
General: On completion submit a maintenance manual setting out a program for regular maintenance cycles at not more than five-year intervals. Include stonework cleaning, desalination, inspection and repair of joints and flashings, checking rainwater goods for blockages and breakdown, and detection of potential failures arising from movement or other causes. Include particulars of stone source, type of stone, and jointing materials.

Cleaning
Cleaning: Leave the stonework clean on completion.

0344 STEEL – HOT-DIP GALVANIZED COATINGS

1 GENERAL

1.1 RESPONSIBILITIES

General
General: Provide hot-dip galvanized coatings that controls atmospheric corrosion to structural steelwork or steel products in the time to first maintenance.

1.2 CROSS REFERENCES

General
Requirement: Conform to the following:
- *General requirements*.
- *Landscape – fences and barriers.*

1.3 STANDARDS

General
Coating: To AS/NZS 4680.

Coating on fasteners: To AS 1214.

Durability: To AS 2309 and AS/NZS 2312.

Metal finishing
Steel preparation methods: To AS 1627.

Coating mass/thickness minimum: To AS/NZS 4680.

Threaded fasteners coating mass/thickness minimum: To AS 1214 Table 2.

1.4 INSPECTION

Notice
Inspection: Give notice so that inspection may be made of the following:
- Coating appearance and thickness, at the galvanizing plant.

1.5 TESTS

Galvanizing tests
Coating mass tests: To AS/NZS 4680 Appendix G.

Magnetic method: To AS 2331.1.3.

Coating thickness tests: To AS/NZS 4680 Appendix G.
- Test method: To AS/NZS 4680 clause 9 and AS/NZS 4680 Appendix G.

Test method: To AS/NZS 4680 Appendix G.
- Frequency of tests: To AS/NZS 4680 clause 9.2.

Sampling plan: to be in accordance with the recommendations of AS 1214 Appendix B for threaded fasteners, or to AS/NZS 4680 Appendix B, as appropriate
- Method: To AS/NZS 4680 Appendix G clause G5.

Testing authority: NATA registered galvanizing plant.

1.6 SUBMISSIONS

Holes and lifting lugs
General: If holes and lifting lugs are required to facilitate handling, filling, venting and draining during galvanizing, submit details on size and location.

Detailing features
General: If design and fabrication features of the items to be galvanized leads to difficulties during galvanizing, identify these and submit details for improvement.

2 EXECUTION

2.1 GENERAL

Care
Dimensional change: If design and fabrication features of items to be galvanized are likely to lead to dimensional change or distortion, identify these and submit proposals for its minimisation.

Embrittlement: Take due care to avoid embrittlement of susceptible steels.

Mechanical properties: Avoid mechanical damage. Ensure that mechanical properties of the base metal do not change.

Surface preparation
Surface contaminants and coatings generally: Chemical clean, then acid pickle.

Chemical cleaning: To AS 1627.1.

Acid pickling: To AS 1627.5.

- Inhibitor: Required.

Post treatment
General: Passivate.

Drilling after completion of hot-dip galvanizing
Repair: Prime drill hole surfaces to AS/NZS 4680 clause 8 before the surfaces begin to corrode.

Coating
Threaded fasteners: To AS 1214.

Structural sections
Cold worked items: Except for hollow sections, anneal to 650°C before galvanizing.

Hollow sections: Provide seal plates with breather holes.

Surface finish
Standard: To AS/NZS 4680 clause 7.

Coating quality: Continuous, adherent, smooth or evenly textured and uniform, free from defects detrimental to the end use of the finished article, such as lumps, blisters, gritty areas, uncoated spots, acids and black spots, dross and flux.

- Silicon killed steels: Dull grey is acceptable.

Friction-type bolted connections: Treat coated contact surfaces to achieve the required design slip factor, without removing excessive coating thickness.

- Contact surface preparation: To GAA After-fabrication hot dip galvanizing Chapter 4.

Slip factor test: To AS 4100 Appendix J.

Surplus zinc on fastener threads: Remove.

Coating repair
Rejection: If uncoated surfaces or areas damaged by handling at the galvanizing plant exceed the limits specified for repair in AS/NZS 4680 clause 8, reject the galvanizing.

Extent and methods: To AS/NZS 4680 clause 8.

Preparation for architectural finishes
Coarse preparation: Remove spikes, and ensure edges are free from lumps and runs.

Light sweep blasting before painting: Required.

- Maximum zinc removal: 10 µm.
- Abrasive grade (range): 150 – 180 µm.
- Abrasive type - clean ilmenite or garnet.
- Blasting angle to surface: 45° maximum.
- Blast pressure (maximum): 275 kPa.
- Distance of nozzle from surface (range): 350 – 400 mm.
- Nozzle type: 10 – 13 mm minimum diameter venturi type.

2.2 SITE WORK

Site welding

Grinding of edges: Permitted.

Weld areas: Reinstate coating to AS/NZS 4680 clause 8.

Site coating reinstatement

Rejection: If any item has damaged areas exceeding the limits specified for repair in AS/NZS 4680 clause 8.1, reject the object.

Extent: Areas damaged by transport, site welding, site flame cutting, site handling, or erection.

Method: To AS/NZS 4680 clause 8.

1424 LANDSCAPE – MAINTENANCE

1 GENERAL

1.1 RESPONSIBILITIES

General

Landscape maintenance: Maintain the contract area during the landscape maintenance period.

Landscape maintenance period: From completion of landscape establishment period and through to the end of the defects liability period.

Summary of responsibilities:

- Watering of lawn, garden bed areas, pots.
- Weeding of lawn, garden bed areas, and pavement.
- Supply and spreading of fertiliser to lawn, garden bed areas and pots.
- Supply and installation of mulch to existing garden bed areas and pots.
- Pruning, trimming and tree surgery.
- Pest and disease control of lawn, shrubs and trees.
- Mowing and edge trimming to all lawn areas including collection and removal of clippings.
- Replacement of dead or failed plants.
- Maintenance of irrigation systems.
- Removal of rubbish and debris in garden areas.
- Keeping of a log book.
- Monthly reports.

Maintenance procedures: To accepted horticultural and arboricultural practice.

1.2 CROSS REFERNECES

General

Requirement: Conform to the following:

- *General requirements*.
- *Landscape – soils.*
- *Landscape – soft surfaces.*
- *Landscape – planting.*
- *Irrigation.*
- *Landscape – establishment.*
- *Landscape – furniture and fixtures.*
- *Concrete pavement.*
- *Segmental pavers – mortar bed.*

1.3 THE SITE

Site restrictions

Entry permits: Make available, to persons entering designated secure areas, valid entry permits. Ensure these persons comply with conditions of entry.

List: At least 10 working days before entry is required, submit the full name, address, and date and place of birth of persons required to enter designated secure areas.

- Purpose of submission: Review.

Occupied premises

General: For the parts of the site designated as occupied premises:

- Allow occupants to continue in secure possession and occupancy of the premises for the required period.

- Make available safe access for occupants.
- Arrange work to minimise nuisance to occupants and ensure their safety.
- Protect occupants against weather, dust, dirt, water or other nuisance, by such means as temporary screens.

Proposals: Submit details of proposed methods.

- Purpose of submission: Information only.

No smoking policy

Policy: Smoking is only permitted in designated zones.

Protection of persons and property

Temporary works: Provide and maintain required barricades, guards, fencing, shoring, temporary roadways, footpaths, signs, lighting, watching and traffic flagging.

Accessways, services: Do not obstruct or damage roadways and footpaths, drains and watercourses and other existing services in use on or adjacent to the site. Determine the location of such services.

Property: Do not interfere with or damage property which is to remain on or adjacent to the site, including adjoining property encroaching onto the site, and trees.

Rectification

Accessways, services: Rectify immediately any obstruction or damage to roadways and footpaths, drains and watercourses and other existing services in use on or adjacent to the site. Provide temporary services whilst repairs are carried out.

Property: Rectify immediately any interference or damage to property which is to remain on or adjacent to the site, including adjoining property encroaching onto the site, and trees.

1.4 GENERAL

Contractor and staff

Affiliation: Suitable professional qualifications acceptable to the principal.

Representative: Nominate a senior partner/personal experienced in maintenance nursery practices and horticulture, to be responsible for taking and carrying out instruction, and reporting to the principal.

Special instructions

Priority: If instructed by the principal attend to certain areas and procedures as a priority. Obtain approval for additional costs prior to commencement of works.

Reporting

Monthly report: Submit regular reports by the last Friday of each month:

- Of the general status of works.
- Include soil test results as required for the fertilising programs.
- Plant replacement requirements.

Incident reports: Report immediately verbally and confirmed in writing any disturbance or incidence affecting or likely to affect the day to day scheduling of works.

Notice

Inspection: Provide two days notice of the following operations:

- Application of herbicide.
- Application of fertiliser.
- Watering.
- Each site maintenance visit.
- Public amenity: Give notice of any work affecting public access or amenity on the Thursday of the week before the work is planned.

Log book

Records: Log the following on a weekly basis:

- Description, time and method of application of toxic material.
- Maintenance work details.
- Inclement weather to verify inability to carry out work within the specified time frame.

Availability: Upon request.

Disruption of works by others
Other contractors: Make arrangements to work around the disturbance.

Warranty
Parties: Supplier(s) to the principal.

Form: All the plants supplied under these works are true-to-species and type, and free of disease, fungal infection and/or any other impediment to their future growth and that they have been fully acclimatised for the conditions of the site.

Submission of warranty: At the time of each delivery.

Plant hire
Existing arrangements: Take responsibility for the re-hiring, installation, care and maintenance of all internal plant material currently under existing plant hire contract for the duration of the maintenance contract.

2 EXECUTION

2.1 GENERALLY

Weeding
Weeds: Unwanted broadleaf plants and grasses considered invasive to the locality.

Program:
- Lawns: Quarterly and as determined by the relationship of the general lawn condition and weed growth.
- Trees and shrubs: As required for planted, paved and mulched areas to be weed free when observed at bi-weekly intervals.

Method: Clear and keep clear vigorous ground covers 200 mm from the base of any shrub or tree:
- Small areas: By hand.
- Large areas: Proprietary herbicides.

Herbicide application: Avoid windy days or if rain is likely to follow within 12 hours.

Apply:
- To the manufacturer’s instructions and material data and safety sheets.
- When the weather is humid with moderate temperatures and maximum sunlight.
- When the ground has adequate soil moisture.

Pest and disease control
The contractor is responsible for the control of any pest or disease which may affect the lawn and garden bed areas.

Actions:
- Identify the problem.
- Execute the correct treatment until the problem has been eliminated.
- Apply hazardous material out of normal working hours.
- Protect staff and public.

2.2 LAWN

Mowing and trimming
Litter: Remove litter and fallen branches prior to mowing.

Height: Consistent with the growth habit of the grass variety and maintained at 25 mm to 40 mm throughout the year.

Program: Weekly during the mowing season, November to March, and at bi-weekly intervals during April to October. Do not mow under wet conditions.

Raking: Once every month before mowing during the mowing season with a flexible rake. On alternate mowings, adopt a north-south and east-west pattern.

Edges: At the same time as mowing, trim lawn edges to plant beds, pathways, base of trees and other obstacles. Ensure trees and shrubs are not damaged.

Clippings distribution: Off-site.

Non-selective herbicide: Ensure application does not exceed the area limits of normal manual trimming. Repair all damage from overuse or over spray.

Fertilising

N:P:K (nitrogen:phosphous:potassium) ratio: Balanced 10:4:6.

Rate: To the manufacturer's recommendation.

Regular application: Each September and April.

Additional application: Each November and February at reduced rates.

Soil pH adjustment: Apply additional fertilisers and soil conditioners as indicated from soil testing or from the physical soil structure. Maintain a pH range of 5.5 – 6.5.

pH testing program: Two year schedule commencing in the first year of the contract.

Spreading:

- Dry: Crush lumps and broadcast dry material by hand or mechanically when the lawn is dry.
- Spray: Acceptable.
- Ensure fertiliser does not leach to adjoining planted beds particularly those with sensitive native trees and shrubs.

Topdressing

Topdressing material for established lawns: Weed free imported sandy topsoil to a depth of 5 mm.

Program: The spring following establishment.

Topdressing material for remediation of depressions or irregularities: Apply coarse or medium soil, to AS 4419, suitable for application to turf or grass seeded areas.

Renovation

Well established lawns of sandy soil profile: Renovate by dethatching or verti-cutting.

Program: In association with and prior to topdressing and fertilising procedures.

2.3 TREES AND SHRUBS

Pruning and trimming

General: Prune to reflect the natural growth flowering and regrowth habit of the individual species. Shrubs: Prune after flowering.

Program: Spring and Summer and on a spot basis as required.

Hedge trimming: Schedule trimming at times which will maintain the character and design of hedges. Allow up to three times per season.

Tip pruning: Do not remove buds before the flowering season in those plants that have terminal flowers.

- Purpose: To encourage development of new shoots during the active growing season.
- Method: The removal of the top 25 mm or growing tip of each branch.

Radical pruning:

- Purpose: To maintain a hedge or formal shape or when a particular problem, growth habit, damage, or disease requires branch removal.
- Clear and keep clear vigorous groundcovers 200 mm from the base of any shrub or tree.
- Use only tools fit for purpose.

Trees: Prune to:

- Eliminate diseased or damaged growth, avoid inter-branch contact and thin out crowns in a natural manner.
- Maintain sight lines to signs and lights.
- Maintain visibility for personal security.

Tree branch removal:

- To AS 4373.
- Give notice and engage a suitably qualified 'arborist'.

Fertilising

Fertilising program: Base the program on soil testing results.

Soil testing: Undertake soil tests as follows:

- At the commencement of the contract.
- Take samples from a cross section of planting beds.

Soil pH adjustment: Apply additional fertilisers and soil conditioners as indicated from soil testing or from the physical soil structure. Maintain a pH range of 5.5 – 6.5.

Shrubs:

- N:P:K ratio: Balanced 10:4:6.
- Rate: To the manufacturer's recommendation and cultivate two rows into the soil 100 mm deep.
- Regular application: Each September and March.
- Ensure the appropriate dosage for sensitive native species.

Trees:

- Application: Apply pill to the root zone at a distance from the trunk equal to the spread of the foliage. Make holes 400 mm deep to take the pill. Backfill with sand, equally spaced around the plant.

Micro nutrients: Apply 1 kg of urea in 20 litres of water per 100 m^2, through a hose proportioner every four weeks during Summer.

Stakes and ties

Generally: If plants are unable to be self supported or if stakes are damaged, stake or restake the plants as follows:

- Drive three hardwood stakes placed obliquely with the first stake on the opposite side to the prevailing winds.
- Do not single stake large plants.

If plants are robust with well developed systems and are strong enough to no longer require support, remove stakes and ties.

Plant replacements

General: Replace all evergreen plants that have died or lost 50% of their normal foliage cover.

Provide replacement plants as follows:

- Of the same species and variety and of the closest commercially available size.
- Of uniformly high quality stock equal to the best commercially available.
- Representative of optimum growth for the species as restricted by the container size.
- With a balanced root system in relation to the size of the plant and conducive to successful transpiration. Inspect the root conditions of plants by knocking plants from their containers.
- Without signs of having been stressed at any stage during their development due to inadequate watering, excessive shade/sunlight, suffered physical damage or have restricted habit due to growth in nursery rows.
- Healthy, well grown, hardened off specimens of good shape and free from pests and disease.
- Well rooted and without any indication of having been restricted (pot bound) or damaged at any time.
- Been grown in their final containers for not less than twelve (12) weeks.

2.4 WATERING

Lawn and planted areas

Generally: Maintain a vigorous healthy appearance.

Application rates: Soak to a depth of 150 mm for lawn and 300 mm for planting. Avoid frequent dampening of the surface. Allow the surface of the soil to partially dry out between waterings. Confirm soaked depth and record in the log book.

Timing: Water at times of day to minimise water evaporation loss. Do not water during the hottest period of Summer days.

Public areas without installed watering systems: Water only in excessive dry periods. Make available all necessary equipment to carry out hand and sprinkler watering as required.

Water restrictions: Coordinate the water supply and confirm the watering regime against federal and state government legislation and restrictions at the time.

Hand watering
General: Manually water all lawn and planting areas in the absence of an irrigation system or until the proposed irrigation system is fully operational.

Irrigation
Irrigation system program: To suit the following:
- The precipitation requirements of the individual zones/stations with regard to types of plants.
- The infiltration rate of the soil/medium and associated physical factors seasons, evaporation, exposure, topography, local authority restrictions.
- An allowance for adjustment or shut down during and after periods prolonged heavy rains.
- To co-ordinate water supply and to confirm watering regime against federal and state government legislation and restrictions at the time.

Equipment maintenance:
- Check all components for proper operation.
- Repair or replace damaged component with equivalent parts.
- Flush any dirt or foreign matter from the system and clear all blockages.

Operation: Ensure by adjustment or replacement of components, that the overall operation of the system is efficient and operational for the entire planting establishment period.

Supervision: Prevent excessive use of water.

Programming
Automated systems: Check that they are programmed to coincide with optimum periods of water pressure and water absorption.

Public access: Do not inconvenience persons occupying the site by water spray or block normal pedestrian or traffic flow.

2.5 MULCHING

General
Clean up: Remove all mulching materials off lawn or paved areas and maintain a clean and tidy appearance when viewed on a weekly basis.

Depth: Maintain a minimum depth of:
- 75 mm for organic mulch.
- 50 mm for gravel mulch.

Top up: Areas of excessive wear.

Appearance: Maintain to keep clean and tidy with no soil disturbance evident on the surface of the mulch.

2.6 INCIDENTAL WORKS

Supplementary works
General: Execute the following:
- Removal of rubbish arising from maintenance work.
- Removal of leaf litter fortnightly during leaf fall.
- Wash paving on completion of herbicide application.

Paving
Slip resistance tests:
- Test to AS 4663 annually.
- Notify deviation from the design value.
- Rectify the surface and re-test as required to comply with the design value.

Furniture, signage and barriers
Scope: All fixed and movable features noted in the record drawings.

Furniture and pots:
- Move and relocate as required for maintenance of the area.
- Repair of replace items damaged by the maintenance contract staff.

Signage: Maintain sight line visibility.

Drains

General: Inspect and clean all drainage structures and pit covers and ensure that they are in proper working order.

Frequency: As required so that all overflow drains are cleared when observed at fortnightly intervals.

3 SELECTIONS

3.1 MAINTENANCE REPORT SCHEDULE

Monthly reports

Minimum requirements: Check list.

Item	Action
Plant material	Replace failed plants
	Additional planting
	Treat for disease or insect attack
	Tree surgery
	Fertilising generally
	Fertilising for specific nutrient deficiencies
	Thin out planting
	Pruning/trimming
Turf	Returfing
	Seeding
	Treat for disease
	Topdressing
	Weeding
	Mowing/trimming
Soil	Erosion/bank stabilisation
	Additional soil
	Soil conditioner
	Weeding
Mulch	Top up mulch
Rubbish removal	Generally remove bottles, paper, cigarette butts etc.
	Remove leaf, litter from path and paved areas
Irrigation	Replace parts
	Repair
	Clean out
	Adjust
	Clean out subsurface drains
Paving and pathways	Repair dips, hollows, irregularities
	Remove stains and graffiti
	Replace sections of uplift
	Clear main pathway drains of debris
	Weeding
	Test against AS 4663
Infant playground	Ensure that all play structures are secure and in working order
Fencing	Repair fencing

Item	Action
Furniture and hard fixtures	Bench/seat
	Bollard
	Lighting
	Barriers

3.2 MAINTENANCE PROCEDURE SCHEDULE

Maintenance scope of works
Minimum attendance: Check list.

WEEK	SPRING (Sept, Oct, Nov)	SUMMER (Dec, Jan, Feb)	AUTUMN (Mar, Apr, May)	WINTER (Jun, Jul, Aug)
1	Mow and trim lawns	Mow lawns; weed	Mow lawns	Weed
2	Weed; trim and adjust trees and shrubs	Weed; mow lawns, trim and adjust trees and shrubs	Weed; mow lawns, trim and adjust trees and shrubs	Mow and trim lawns Trim and adjust trees and shrubs
3	Mow and fertilise lawns; treat plant material for insects and disease	Mow lawns; weed; treat plant material for insects and disease	Mow and trim lawn	Weed
4	Weed; topdress, condition lawns and oversow bare patches; issue maintenance report	Weed; mow and trim lawns; issue maintenance report	Weed; mow lawns; issue maintenance report	Mow lawns; issue maintenance report
5	Fertilise all trees and shrubs in garden beds; mow and trim lawns	Mow lawns; weed	Mow lawns	Mow lawns
6	Weed; inspect mulch for deficiencies in cover; check and adjust irrigation	Mow lawns; check and adjust irrigation	Weed; inspect mulch for deficiencies in cover; check and adjust irrigation	Mow and trim lawns; treat for insects and disease; check and adjust irrigation
7	Reinstate mulch as required; treat plant material for insects and disease; mow lawns	Mow lawns; weed	Reinstate mulch as required; mow, trim and fertilise lawns	Weed
8	Weed; inspect condition of paving and furniture; issue maintenance report	Mow and trim lawns; inspect condition of paving & furniture; issue maintenance report	Weed; inspect condition of paving and furniture; issue maintenance report	Mow lawns; Inspect condition of paving and furniture; issue maintenance report
9	Mow and trim lawns	Mow lawns; treat plant material for insects and disease	Mow lawns	Weed
10	Weed; mow lawns	Mow and topdress lawns	Weed; treat plant material for insects and disease	Mow and trim lawns

WEEK	SPRING (Sept, Oct, Nov)	SUMMER (Dec, Jan, Feb)	AUTUMN (Mar, Apr, May)	WINTER (Jun, Jul, Aug)
11	Mow and fertilise lawns; trim and adjust trees and shrubs	Mow lawns; trim and adjust lawns; weed	Mow and trim lawns; trim and adjust trees and shrubs	Prune back trees and shrubs after flowering
12	Weed; mow lawns; treat plant material for insects and disease	Mow, trim & fertilise lawns	Weed	Mow lawns; treat plant material for insects and disease
13	Check and adjust irrigation; mow lawns; issue maintenance report	Check and adjust irrigation; mow lawns; weed; issue maintenance report	Check and adjust irrigation; mow lawns; weed; issue maintenance report	Check and adjust irrigation; weed; issue maintenance report

3.3 IRRIGATION SCHEDULE

Irrigation maintenance scope of works
Minimum attendance: Check list.

General:	
Filters – mainline	Monthly
Electrical source output (auto system)	Monthly
Controller (automatic systems)	Monthly
Operation – progression - Sta to Sta.	Weekly
Proper activation of valves	Monthly
Proper timing of stations	Bi-annually
Proper time and day readings	Weekly
Exterior appearance	Bi-annually
Valve operation	Bi-annually
Open, close completely (weeping)	Weekly
Sprinkler operation	Weekly
Rotaries – clogged nozzles	Bi-monthly
Plant obstructed pattern	Bi-monthly
Arc coverage	Bi-monthly
Radius adjustment	Bi-monthly
Pop-up action	Bi-monthly
Riser seal leaks	Bi-monthly
Set to grade	Bi-monthly
Coverage pressure	Bi-monthly
Rotational speed	Bi-monthly
Clogged screens	Bi-monthly
Head damage	Bi-monthly
Piping	Bi-monthly
Leaks – broken or cracked pipe	As Needed
Bad solvent welds, bad threaded	As Needed
Connection	As Needed
Clogged pipe	As Needed

Studios

Adelaide
Level 1 82 Waymouth Street
Adelaide SA Australia 5000
T +61 8 8220 5000
E adelaide@hassellstudio.com

Brisbane
36 Warry Street
Fortitude Valley QLD Australia 4006
T +61 7 3914 4000
E brisbane@hassellstudio.com

Hong Kong
22F, 169 Electric Road
North Point Hong Kong
T +852 2552 9098
E hongkong@hassellstudio.com

London
1 Curtain Place
London EC2A 3AN United Kingdom
T +44 20 7490 7669
E london@hassellstudio.com

Melbourne
61 Little Collins Street
Melbourne VIC Australia 3000
T +61 3 8102 3000
E melbourne@hassellstudio.com

Perth
Level 1
Commonwealth Bank Building
242 Murray Street
Perth WA Australia 6000
T +61 8 6477 6000
E perth@hassellstudio.com

San Francisco
Level 7 650 California Street
San Francisco CA 94108 United States
T +1 415 860 7067
E sanfrancisco@hassellstudio.com

Shanghai
12F base 45 Caoxi North Road
Xuhui District Shanghai 200030 China
T +8621 5456 3666
E shanghai@hassellstudio.com

Singapore
33 Tras Street
#02-01 078973 Singapore
T +65 6224 4688
E singapore@hassellstudio.com

Sydney
Level 2 Pier 8/9
23 Hickson Road
Sydney NSW Australia 2000
T +61 2 9101 2000
E sydney@hassellstudio.com

Document Control

Rev	Date	Approved By	Description
A	16.08.2021	AE	For Tender

© Hassell. This document and the ideas incorporated within, as an instrument of professional service, is the property of Hassell. It shall not be used or reproduced in any manner what so-ever, in whole or in part, or for any other project without the prior permission of Hassell.

LEG2020/10006

FRASERS PROPERTY

12th October 2020

Wayne Rylands
Ryde Council City Works Directorate
1 Pope Street, Ryde
NSW 2112

CONDITION B96 Temporary Stormwater Works Bank Guarantee

Dear Ryde Council City Works Directorate

In accordance with the Development Consent SSD 8903 Planning Condition B96: Frasers Ivanhoe Pty Ltd is providing a Bank Guarantee for $200,000.

The Bank Guarantee Number is DG894823416 and Provided by ANZ .

The Details of the Condition are as follows:

B96. All temporary stormwater works must be designed and undertaken in accordance with the relevant aspects of the Council's DCP 2014 Part 8.2, Australian Rainfall and Runoff (ARR) 2019, NSW Floodplain Development Manual 2005 and any other relevant Australian Standards.

Detailed design plans of the temporary works stormwater design, calculations and other supporting documentations prepared by a Chartered Civil Engineer (registered on the NER of Engineers Australia) must be submitted to, and approved by, the Certifier prior to the commencement of the relevant works. A copy of the approved plans and documentation must be provided to Council prior to the commencement of the relevant works.

The detailed design of temporary works drainage shall be subject to any amendments warranted by Council's City Works Directorate as a result of the review and approval of the temporary works design plans.
To ensure satisfactory performance of the excavation, laying of pipes, back filling, disposal of excess soil and restoration including new kerb and gutter works, the Applicant must maintain all trunk drainage works until dedication to Council.

A bond in the form of a cash deposit or Bank Guarantee of $200,000 shall be lodged with Council prior to the issue of any Crown Building Works Certificate to guarantee this requirement will be met. The bond will be released on dedication to Council.

For any queries feel free to contact me on the details below. Kind Regards,

P. Statham

Peter Statham
Project Manager
Frasers Property Australia Pty Limited
T +61 2 9767 2071
E Peter.Statham@frasersproperty.com.au

RECEIVED
12 OCT 2020
CUSTOMER SERVICE CENTRE

FRASERS
PROPERTY

ANZ
ABN 11 005 357 522
TSC Operations-Australia Guarantees
Level 5, Core AB, 833 Collins St
Docklands, VIC 3008
Tel: 1300 091 233
Fax: 1300 072 851
SWIFT: ANZBAU3MXXX
www.anz.com

ORIGINAL

Guarantee
No. DG894823418

Beneficiary:
Ryde City Council
ABN 81 621 292 610 Australia

Applicant:
Frasers Property AHL Limited
ABN 12 008 443 696
Level 2, Building C, 1 Homebush
Bay Drive, Rhodes NSW 2138 Australia
Ref: P-510

Date of issue:
September 22, 2020

Guarantee Amount:
Not Exceeding AUD 200,000.00
Two Hundred Thousand
Australian Dollars

Special Conditions:

Description of Contract / Agreement:
Australia and New Zealand Banking Group Limited ('ANZ') asks the Beneficiary to accept this bank guarantee ('Undertaking') in connection with a contract or agreement between the Beneficiary and Applicant for:
Project Name: Ivanhoe - Midtown
Stage: Stage 1
Purpose: Condition B96 - SSD 8903 - Stormwater Drainage
DA No: SSD 8903.

Guarantee Amount
In consideration of the Beneficiary accepting this Undertaking and its terms, ANZ undertakes unconditionally to pay the Beneficiary on written demand from time to time any sum or sums up to an aggregate amount not exceeding: Australian Dollars Two Hundred Thousand Only (AUD 200,000.00) ('Amount').

Undertaking:
ANZ will pay the Amount or any part of it to the Beneficiary upon presentation of this original Undertaking (accompanied by a written demand) at ANZ Trade and Supply Chain, Level 18, 242 Pitt Street, Sydney, NSW, 2000 without reference to the Applicant and even if the Applicant has given ANZ notice not to pay the money, and without regard to the performance or non-performance of the Applicant or Beneficiary under the terms of the contract or agreement.

ORIGINAL

RECEIVED
12 OCT 2020
CUSTOMER SERVICE CENTRE

ORIGINAL

By accepting this Undertaking, the Beneficiary acknowledges and agrees that ANZ may rely entirely on any demand or notice as presented to it and has no responsibility or obligation to investigate the authenticity or correctness of the matters stated in a demand or notice, the signatures on the same, the positions of such signatories or the capacity or entitlement of the Beneficiary to give and execute the demand or notice.

Any alterations to the terms of the contract or agreement or any extensions of time or any other forbearance by the Beneficiary or Applicant will not impair or discharge ANZ's liability under the Undertaking.

This Undertaking remains in force until the first to occur of:
- The Beneficiary notifies ANZ in writing that the Undertaking is no longer required.
- This original Undertaking is returned to ANZ Trade and Supply Chain, Level 5, Core AB, 833 Collins Street, Docklands VIC 3008.
- ANZ has paid to the Beneficiary the Amount or the balance outstanding of the Amount.
- 4.00pm on the September 23, 2024, in the State or Territory of presentation ('Expiry date'). If the Expiry date is not a business day in the State or Territory, then the Expiry date shall be deemed to occur on the next business day.

Notwithstanding anything stated in this Undertaking, ANZ has the right to terminate it at any time by paying the Beneficiary the Amount or the balance outstanding of the Amount, or any lesser amount that the Beneficiary may require.

This Undertaking is personal to the Beneficiary. The Beneficiary cannot assign, transfer, charge or otherwise deal with its rights under this Undertaking and ANZ will not recognize any purported assignment, transfer, charge or other dealing.

This Undertaking will be governed by the laws of the place of presentation.

Executed at Melbourne for and on behalf of Australia and New Zealand Banking Group Limited ABN 11 005 357 522

Regards,

Anandan Reddy

AUSTRALIA AND NEW ZEALAND BANKING GROUP LIMITED
A.B.N. 11 005 357 522
L 5, CORE AB, 833 COLLINS ST
DOCKLANDS
TRADE & SUPPLY CHAIN

Authorised Signature(s)

May Zheng

ANZ
ABN 11 005 357 522
TSC Operations-Australia Guarantees
Level 5, Core AB, 833 Collins St
Docklands, VIC 3008
Tel: 1300 091 233
Fax: 1300 072 851
SWIFT: ANZBAU3MXXX
www.anz.com

Frasers Property AHL Limited
ABN 12 008 443 696
Level 2, Building C, 1 Homebush
Bay Drive, Rhodes NSW 2138 Australia

September 22, 2020

Re: Our Guarantee No.: DG894823418
Your Reference: P-510
Beneficiary: Ryde City Council

Dear Customer,

We enclose a copy of the above-mentioned Guarantee issued in accordance with your instructions.

Please review the content of this document carefully and notify us within 2 working days if you have any concerns as to the terms and conditions thereof.

ORIGINAL

Guarantee No.:	DG894823418
Amount:	Australian Dollars Two Hundred Thousand
Beneficiary:	Ryde City Council
Effective Date:	September 22, 2020
Expiry Date:	September 23, 2024

Unless otherwise instructed herein, all correspondence and enquiries regarding this transaction should be directed to our Customer Service Centre at the above address, telephone: 1300 091 233. Please indicate our reference number in all your correspondence or telephone enquiries.

This document is computer-generated, and requires no signature.

Guarantee
No. DG894823418

Beneficiary:
Ryde City Council
ABN 81 621 292 610 Australia

Applicant:
Frasers Property AHL Limited
ABN 12 008 443 696
Level 2, Building C, 1 Homebush
Bay Drive, Rhodes NSW 2138 Australia
Ref: P-510

Date of issue:
September 22, 2020

Guarantee Amount:
Not Exceeding AUD 200,000.00
Two Hundred Thousand
Australian Dollars

Special Conditions:

Description of Contract / Agreement:
Australia and New Zealand Banking Group Limited ('ANZ') asks the Beneficiary to accept this bank guarantee ('Undertaking') in connection with a contract or agreement between the Beneficiary and Applicant for:
Project Name: Ivanhoe - Midtown
Stage: Stage 1
Purpose: Condition B96 - SSD 8903 - Stormwater Drainage
DA No: SSD 8903.

Guarantee Amount
In consideration of the Beneficiary accepting this Undertaking and its terms, ANZ undertakes unconditionally to pay the Beneficiary on written demand from time to time any sum or sums up to an aggregate amount not exceeding: Australian Dollars Two Hundred Thousand Only (AUD 200,000.00) ('Amount').

Undertaking:
ANZ will pay the Amount or any part of it to the Beneficiary upon presentation of this original Undertaking (accompanied by a written demand) at ANZ Trade and Supply Chain, Level 18, 242 Pitt Street, Sydney, NSW, 2000 without reference to the Applicant and even if the Applicant has given ANZ notice not to pay the money, and without regard to the performance or non-performance of the Applicant or Beneficiary under the terms of the contract or agreement.

COPY

By accepting this Undertaking, the Beneficiary acknowledges and agrees that ANZ may rely entirely on any demand or notice as presented to it and has no responsibility or obligation to investigate the authenticity or correctness of the matters stated in a demand or notice, the signatures on the same, the positions of such signatories or the capacity or entitlement of the Beneficiary to give and execute the demand or notice.

Any alterations to the terms of the contract or agreement or any extensions of time or any other forbearance by the Beneficiary or Applicant will not impair or discharge ANZ's liability under the Undertaking.

This Undertaking remains in force until the first to occur of:
- The Beneficiary notifies ANZ in writing that the Undertaking is no longer required.
- This original Undertaking is returned to ANZ Trade and Supply Chain, Level 5, Core AB, 833 Collins Street, Docklands VIC 3008.
- ANZ has paid to the Beneficiary the Amount or the balance outstanding of the Amount.
- 4.00pm on the September 23, 2024, in the State or Territory of presentation ('Expiry date'). If the Expiry date is not a business day in the State or Territory, then the Expiry date shall be deemed to occur on the next business day.

Notwithstanding anything stated in this Undertaking, ANZ has the right to terminate it at any time by paying the Beneficiary the Amount or the balance outstanding of the Amount, or any lesser amount that the Beneficiary may require.

This Undertaking is personal to the Beneficiary. The Beneficiary cannot assign, transfer, charge or otherwise deal with its rights under this Undertaking and ANZ will not recognize any purported assignment, transfer, charge or other dealing.

This Undertaking will be governed by the laws of the place of presentation.

Executed at Melbourne for and on behalf of Australia and New Zealand Banking Group Limited ABN 11 005 357 522

Regards,

COPY

Authorised Signature(s)

COPY

Eric Hausfeld

From: Chris Koukoutaris <Chris.Koukoutaris@frasersproperty.com.au>
Sent: Friday, 3 September 2021 9:29 AM
To: Eric Hausfeld
Cc: Peter Statham; Stephen Peters
Subject: Fwd: Condition B97 - SSD8903 Stage 1B

Hi Eric

Please see below

Thanks

Regards
Chris Koukoutaris
Frasers Property Australia

Begin forwarded message:

> **From:** Manel Mariner <ManelM@ryde.nsw.gov.au>
> **Date:** 3 September 2021 at 7:43:15 am AEST
> **To:** Ben Myles <benm@adwjohnson.com.au>, Chris Koukoutaris <Chris.Koukoutaris@frasersproperty.com.au>
> **Cc:** Peter Statham <peter.statham@frasersproperty.com.au>, Stephen Peters <Stephen.Peters@frasersproperty.com.au>, Peter Statham <peter.statham@frasersproperty.com.au>, Matt Owen <matto@adwjohnson.com.au>
> **Subject: RE: Condition B97 - SSD8903 Stage 1B**
>
> **EXTERNAL EMAIL:** Do not click links or open attachments unless you recognise the sender and know the content is safe.
>
> Thanks Ben, very appreciated.
>
> Chris, **Condition B97 is satisfied.** Please, take this email as formal approval.
>
> Thanks all for your collaboration.
>
> Kind regard
>
> **Manel Mariner**
> Senior Engineer - Stormwater and Floodplain Management
> ASSETS & INFRASTRUCTURE
> **P** 0299528289
> **M** 0434 859 371
> **E** ManelM@ryde.nsw.gov.au
> **W** www.ryde.nsw.gov.au

Customer Service Centre 1 Pope Street, Ryde (Within Top Ryde City shopping centre)
North Ryde Office Riverview Business Park, Building 0, Level 1, 3 Richardson Place, North Ryde

Let's Connect Facebook | Twitter | Instagram | YouTube | eNews

The City of Ryde wishes to acknowledge the Traditional Custodians of the Land on which we work and pay our respect to the Elders both past, present and emerging, and extend that respect to all Aboriginal and Torres Strait Islander peoples.

This email is privileged and confidential. If you are not the intended recipient please delete the message and notify the sender. The use, copying or distribution of this message or any information it contains, by anyone other than the intended recipient is prohibited. Unless stated otherwise, this email represents only the views of the sender and not the views of the City of Ryde Council. Please note: information provided to Council in correspondence may be made publicly available, in accordance with the Government Information Public Access Act (GIPA Act) 2009.

From: Ben Myles <benm@adwjohnson.com.au>
Sent: Thursday, 2 September 2021 5:24 PM
To: Manel Mariner <ManelM@ryde.nsw.gov.au>; Chris Koukoutaris <chris.koukoutaris@fraserproperty.com.au>
Cc: Peter Statham <Peter.Statham@fraserproperty.com.au>; Stephen Peters <Stephen.Peters@fraserproperty.com.au>; Peter Statham <Peter.Statham@fraserproperty.com.au>; Matt Owen <matto@adwjohnson.com.au>
Subject: RE: Condition B97 - SSD8903 Stage 1B

Hi Manel,

Please find attached 2d file (with pipe widths), 3d file with levels and a file with the catchments and labels to match our drawings (I have provided this in case this assists).

If you need anything further please let me know.

Regards,

Ben Myles
Civil Engineer
Central Coast Office
02 4305 4300
0431 018 741
Email : benm@adwjohnson.com.au
Website: www.adwjohnson.com.au

ADW Johnson Pty Limited

Hunter	**7/335 Hillsborough Road, Warners Bay NSW 2282**	**Ph. 02 4978 5100**
Central Coast	**5 Pioneer Avenue, Tuggerah NSW 2259**	**Ph. 02 4305 4300**
Sydney	**Level 35 One International Towers, 100 Barangaroo Avenue, Sydney NSW 2000**	**Ph. 02 8046 7411**

THIS MESSAGE AND ANY FILES TRANSMITTED WITH IT ARE INTENDED FOR THE ADDRESSEE ONLY AND ARE TO BE USED ONLY FOR THE PURPOSES OF OUR CLIENTS INSTRUCTIONS.ANY FILES HEREWITH ARE COPYRIGHT OF ADW Johnson Pty Ltd. AND ARE NOT TO BE COPIED FOR ANY OTHER PURPOSE OR STORED ON A RETRIEVAL SYSTEM WITHOUT THE EXPRESS WRITTEN PERMISSION OF ADW Johnson Pty Ltd.

please don't print this e-mail unless you really need to.

From: Manel Mariner <ManelM@ryde.nsw.gov.au>
Sent: Thursday, 2 September 2021 9:50 AM
To: Ben Myles <benm@adwjohnson.com.au>; Chris Koukoutaris <chris.koukoutaris@fraserproperty.com.au>
Cc: Peter Statham <Peter.Statham@fraserproperty.com.au>; Stephen Peters <Stephen.Peters@fraserproperty.com.au>; Peter Statham <Peter.Statham@fraserproperty.com.au>; Matt Owen <matto@adwjohnson.com.au>
Subject: RE: Condition B97 - SSD8903 Stage 1B

Hi Ben,

Thanks for your email. Yes, a 3d dwg will do. We will be able to open that with our Autodesk suite.

Thanks also for the link.

Kind regards,

Manel Mariner
Senior Engineer - Stormwater and Floodplain Management
ASSETS & INFRASTRUCTURE
P 0299528289
M 0434 859 371
E ManelM@ryde.nsw.gov.au
W www.ryde.nsw.gov.au

White Ribbon Workplace Proudly accredited by White Ribbon Australia

Customer Service Centre 1 Pope Street, Ryde (Within Top Ryde City shopping centre)
North Ryde Office Riverview Business Park, Building 0, Level 1, 3 Richardson Place, North Ryde

Let's Connect Facebook | Twitter | Instagram | YouTube | eNews

The City of Ryde wishes to acknowledge the Traditional Custodians of the Land on which we work and pay our respect to the Elders both past, present and emerging, and extend that respect to all Aboriginal and Torres Strait Islander peoples.

This email is privileged and confidential. If you are not the intended recipient please delete the message and notify the sender. The use, copying or distribution of this message or any information it contains, by anyone other than the intended recipient is prohibited. Unless stated otherwise, this email represents only the views of the sender and not the views of the City of Ryde Council. Please note: information provided to Council in correspondence may be made publicly available, in accordance with the Government Information Public Access Act (GIPA Act) 2009.

From: Ben Myles <benm@adwjohnson.com.au>
Sent: Thursday, 2 September 2021 8:32 AM
To: Chris Koukoutaris <chris.koukoutaris@fraserproperty.com.au>; Manel Mariner <ManelM@ryde.nsw.gov.au>
Cc: Peter Statham <Peter.Statham@fraserproperty.com.au>; Stephen Peters <Stephen.Peters@fraserproperty.com.au>; Peter Statham

<Peter.Statham@frasersproperty.com.au>; Matt Owen <matto@adwjohnson.com.au>
Subject: RE: Condition B97 - SSD8903 Stage 1B

Hi Manel,

We can export this as a 3d dwg, however this will not have any attributes (i.e. pipe types, pit types etc). It will also not show up any of the rainfall data or other information utilised in the calculations.
The file will however have pipe invert levels, pipe sizes (graphically drawn with a thickness indicating the size) and the general layout.

Alternatively, I looked online and there is a tool called "12D data extension" which is an add on for Civil 3d that will allow you to import 12DA files into Civil 3d. See link below.
Let me know your thoughts on what you would like us to provide and we can send it through.

https://up.autodesk.com/2020/CIV3D/12dExtension2020.htm

Regards,

Ben Myles
Civil Engineer
Central Coast Office
02 4305 4300
0431 018 741
Email : benm@adwjohnson.com.au
Website: www.adwjohnson.com.au

ADW Johnson Pty Limited

Hunter	**7/335 Hillsborough Road, Warners Bay NSW 2282**	**Ph. 02 4978 5100**
Central Coast	**5 Pioneer Avenue, Tuggerah NSW 2259**	**Ph. 02 4305 4300**
Sydney	**Level 35 One International Towers, 100 Barangaroo Avenue, Sydney NSW 2000**	**Ph. 02 8046 7411**

THIS MESSAGE AND ANY FILES TRANSMITTED WITH IT ARE INTENDED FOR THE ADDRESSEE ONLY AND ARE TO BE USED ONLY FOR THE PURPOSES OF OUR CLIENTS INSTRUCTIONS.ANY FILES HEREWITH ARE COPYRIGHT OF ADW Johnson Pty Ltd. AND ARE NOT TO BE COPIED FOR ANY OTHER PURPOSE OR STORED ON A RETRIEVAL SYSTEM WITHOUT THE EXPRESS WRITTEN PERMISSION OF ADW Johnson Pty Ltd.

please don't print this e-mail unless you really need to.

From: Chris Koukoutaris <Chris.Koukoutaris@frasersproperty.com.au>
Sent: Wednesday, 1 September 2021 5:09 PM
To: Manel Mariner <manelm@ryde.nsw.gov.au>
Cc: Peter Statham <Peter.Statham@frasersproperty.com.au>; Stephen Peters <Stephen.Peters@frasersproperty.com.au>; Ben Myles <benm@adwjohnson.com.au>; Peter Statham <Peter.Statham@frasersproperty.com.au>
Subject: RE: Condition B97 - SSD8903 Stage 1B

Hi Manel,

Ben will check and come back to us

Thanks

Chris Koukoutaris
Senior Development Manager
Frasers Property Australia

T +61 2 9767 2223 **M** +61 434 034 371
E Chris.Koukoutaris@frasersproperty.com.au
Level 2, 1C Homebush Bay Drive, Rhodes NSW 2138 Australia
www.frasersproperty.com.au | LinkedIn | YouTube

From: Manel Mariner <ManelM@ryde.nsw.gov.au>
Sent: Wednesday, 1 September 2021 5:02 PM
To: Chris Koukoutaris <Chris.Koukoutaris@frasersproperty.com.au>
Cc: Peter Statham <Peter.Statham@frasersproperty.com.au>; Stephen Peters <Stephen.Peters@frasersproperty.com.au>; benm@adwjohnson.com.au; Peter Statham <Peter.Statham@frasersproperty.com.au>
Subject: RE: Condition B97 - SSD8903 Stage 1B

EXTERNAL EMAIL: Do not click links or open attachments unless you recognise the sender and know the content is safe.

Hi Chris,

We don't have any cross referencing tool, as far as I know. Is there any other format 12D can export it? Some generic file type?

Kind regards

Manel Mariner
Senior Engineer - Stormwater and Floodplain Management
ASSETS & INFRASTRUCTURE
P 0299528289
M 0434 859 371
E ManelM@ryde.nsw.gov.au
W www.ryde.nsw.gov.au

White Ribbon Workplace Proudly accredited by White Ribbon Australia

Customer Service Centre 1 Pope Street, Ryde (Within Top Ryde City shopping centre)
North Ryde Office Riverview Business Park, Building 0, Level 1, 3 Richardson Place, North Ryde

Let's Connect Facebook | Twitter | Instagram | YouTube | eNews

The City of Ryde wishes to acknowledge the Traditional Custodians of the Land on which we work and pay our respect to the Elders both past, present and emerging, and extend that respect to all Aboriginal and Torres Strait Islander peoples.

This email is privileged and confidential. If you are not the intended recipient please delete the message and notify the sender. The use, copying or distribution of this message or any information it contains, by anyone other than the intended recipient is prohibited. Unless stated otherwise, this email represents only the views of the sender and not the views of the City of Ryde Council. Please note: information provided to Council in correspondence may be made publicly available, in accordance with the Government Information Public Access Act (GIPA Act) 2009.

From: Chris Koukoutaris <Chris.Koukoutaris@frasersproperty.com.au>
Sent: Wednesday, 1 September 2021 4:56 PM
To: Manel Mariner <ManelM@ryde.nsw.gov.au>
Cc: Peter Statham <Peter.Statham@frasersproperty.com.au>; Stephen Peters <Stephen.Peters@frasersproperty.com.au>; benm@adwjohnson.com.au; Peter Statham <Peter.Statham@frasersproperty.com.au>
Subject: RE: Condition B97 - SSD8903 Stage 1B

Hi Manel,

Hope all is well.

Please note our civil designers don't use civil 3d.

Is there a cross referencing tool that Council may use?

Chris Koukoutaris
Senior Development Manager
Frasers Property Australia

T +61 2 9767 2223 **M** +61 434 034 371
E Chris.Koukoutaris@frasersproperty.com.au
Level 2, 1C Homebush Bay Drive, Rhodes NSW 2138 Australia
www.frasersproperty.com.au | LinkedIn | YouTube

From: Manel Mariner <ManelM@ryde.nsw.gov.au>
Sent: Tuesday, 31 August 2021 8:01 AM
To: Chris Koukoutaris <Chris.Koukoutaris@frasersproperty.com.au>
Cc: 'Eric Hausfeld' <Eric@LDC.com.au>; Peter Statham <Peter.Statham@frasersproperty.com.au>; Stephen Peters <Stephen.Peters@frasersproperty.com.au>; benm@adwjohnson.com.au
Subject: RE: Condition B97 - SSD8903 Stage 1B

EXTERNAL EMAIL: Do not click links or open attachments unless you recognise the sender and know the content is safe.

Hi Chris,

Thanks for sending this information.

I believe this information is in 12D format. Could you please provide it in Civil 3D format? We don't use 12D in this Council.

Kind regards,

Manel Mariner
Senior Engineer - Stormwater and Floodplain Management
ASSETS & INFRASTRUCTURE
P 0299528289
M 0434 859 371
E ManelM@ryde.nsw.gov.au
W www.ryde.nsw.gov.au

White Ribbon Workplace Proudly accredited by White Ribbon Australia

Customer Service Centre 1 Pope Street, Ryde (Within Top Ryde City shopping centre)
North Ryde Office Riverview Business Park, Building 0, Level 1, 3 Richardson Place, North Ryde

Let's Connect Facebook | Twitter | Instagram | YouTube | eNews

The City of Ryde wishes to acknowledge the Traditional Custodians of the Land on which we work and pay our respect to the Elders both past, present and emerging, and extend that respect to all Aboriginal and Torres Strait Islander peoples.

This email is privileged and confidential. If you are not the intended recipient please delete the message and notify the sender. The use, copying or distribution of this message or any information it contains, by anyone other than the intended recipient is prohibited. Unless stated otherwise, this email represents only the views of the sender and not the views of the City of Ryde Council. Please note: information provided to Council in correspondence may be made publicly available, in accordance with the Government Information Public Access Act (GIPA Act) 2009.

From: Chris Koukoutaris <Chris.Koukoutaris@frasersproperty.com.au>
Sent: Tuesday, 17 August 2021 11:03 AM
To: City of Ryde <CityofRyde@ryde.nsw.gov.au>
Cc: 'Eric Hausfeld' <Eric@LDC.com.au>; Peter Statham <Peter.Statham@frasersproperty.com.au>; Stephen Peters <Stephen.Peters@frasersproperty.com.au>; benm@adwjohnson.com.au
Subject: RE: Condition B97 - SSD8903 Stage 1B

Dear City Council,

In accordance with condition B97 of SSDA 8903 please find attached the input and output files of the design software.

Also attached the plans and the hard copy inputs.

Thanks

Chris Koukoutaris
Senior Development Manager
Frasers Property Australia

T +61 2 9767 2223 **M** +61 434 034 371
E Chris.Koukoutaris@fraserproperty.com.au
Level 2, 1C Homebush Bay Drive, Rhodes NSW 2138 Australia
www.fraserproperty.com.au | LinkedIn | YouTube

Notice of confidentiality | This message and any files transmitted with it may be privileged and/or confidential and are intended only for the use of the addressee. If you are not the intended recipient, you should not disseminate, distribute or copy this message, nor use it for any purpose. If you have received this message in error, please notify us immediately by return email and delete the original message.

Eric Hausfeld

From: Chris Koukoutaris <Chris.Koukoutaris@frasersproperty.com.au>
Sent: Friday, 9 October 2020 11:05 AM
To: Eric Hausfeld
Cc: Peter Statham
Subject: Fwd: Flooding - We-transfer link - 24.9.20 Ivanhoe Place Macquarie Park

FYI from Council
Condition closed

Thanks

Regards
Chris Koukoutaris
Frasers Property Australia

Begin forwarded message:

> **From:** Manel Mariner <ManelM@ryde.nsw.gov.au>
> **Date:** 9 October 2020 at 10:27:33 am AEDT
> **To:** Chris Koukoutaris <Chris.Koukoutaris@frasersproperty.com.au>
> **Subject: FW: RE: Flooding - We-transfer link - 24.9.20 Ivanhoe Place Macquarie Park**
>
> **CAUTION: External email. Do not click links or open attachments unless you recognise the sender and know the content is safe.**
>
> ---
>
> Hi Chris,
>
> Just writing to confirm that Condition B102 is satisfied.
>
> Kind regards,

Manel Mariner
Senior Engineer - Stormwater and Floodplain Management
ASSETS & INFRASTRUCTURE

P (02) 9952 8289
M 0434 859 371
E ManelM@ryde.nsw.gov.au
W www.ryde.nsw.gov.au

City of Ryde

Customer Service Centre 1 Pope Street, Ryde (Within Top Ryde City shopping centre)
North Ryde Office Riverview Business Park, Building 0, Level 1, 3 Richardson Place, North Ryde

Let's Connect Facebook | Twitter | Instagram | YouTube | eNews

This email is privileged and confidential. If you are not the intended recipient please delete the message and notify the sender. The use, copying or distribution of this message or any information it contains, by anyone other than the intended recipient is prohibited. Unless stated otherwise, this email represents only the views of the sender and not the views of the City of Ryde Council. Please note: information provided to Council in correspondence may be made publicly available, in accordance with the Government Information Public Access Act (GIPA Act) 2009.

From: Chris Koukoutaris <Chris.Koukoutaris@frasersproperty.com.au>
Sent: Thursday, 24 September 2020 1:38 PM
To: City of Ryde <CityofRyde@ryde.nsw.gov.au>
Cc: 'Eric Hausfeld' <Eric@LDC.com.au>; Alex Ciecko <aciecko@mckenzie-group.com.au>; Peter Statham <Peter.Statham@frasersproperty.com.au>
Subject: [SUSPICIOUS MESSAGE] RE: Flooding - We-transfer link - 24.9.20 Ivanhoe Place Macquarie Park

This Message contains suspicious characteristics and has originated outside your organization.

Hi Ryde Council

In complying with the conditions of consent for approval SSD 8903 – Condition B102

Please find the we-transfer link which includes the TUFLOW models.

https://we.tl/t-UYW1bwEqLY

If you have any queries feel free to contact me.

Kind regards

Chris Koukoutaris
Senior Development Manager
Frasers Property Australia

T +61 2 9767 2223 **M** +61 434 034 371
E Chris.Koukoutaris@frasersproperty.com.au
Level 2, 1C Homebush Bay Drive, Rhodes NSW 2138 Australia
www.frasersproperty.com.au | LinkedIn | YouTube

We've changed the way we work to accommodate COVID-19. For details visit our website.

Creating proud communities since 1924
Read the magazine > liveproud.com.au
Live proud.
FRASERS PROPERTY

Notice of confidentiality | This message and any files transmitted with it may be privileged and/or confidential and are intended only for the use of the addressee. If you are not the intended recipient, you should not disseminate, distribute or copy this message, nor use it for any purpose. If you have received this message in error, please notify us immediately by return email and delete the original message.

Robert Bird Group
Member of the Surbana Jurong Group

ADELAIDE OFFICE
Robert Bird Group Pty Ltd
ABN 67 010 580 248 ACN 010 580 248
Level 10, 19 Grenfell Street, Adelaide SA 5000
PO Box 286, Rundle Mall SA 5000 Australia
p: +61 (0) 8 8232 6683
www.robertbird.com

Reference: GK:GK RP ST 21094

23 October 2021

Frasers Property Group
L2 1C Homebush Bay Drive
RHODES NSW 2138

Attention: Chris Koukoutaris

Dear Mr Koukoutaris

RE: PEER REVIEW SHRIMPTON CREEK BRIDGE

In accordance with our proposal 6 August 2021 Robert Bird Group (RBG) has undertaken Review of the Shrimpton Creek Bridge.

The Shrimpton Creek Bridge has been prepared by SMEC and is presented on drawings:

Drawing Number	Revision
30013046-100	3
30013046-101	2
30013046-105	3
30013046-106	3
30013046-107	2
30013046-111	3
30013046-112	3
30013046-115	3
30013046-116	3
30013046-117	2
30013046-121	3
30013046-122	3
30013046-123	2
30013046-124	2
30013046-131	3
30013046-132	3
30013046-133	2
30013046-135	3
30013046-136	3
30013046-141	3
30013046-151	3
30013046-152	3
30013046-153	3
30013046-161	3
30013046-162	3
30013046-163	3
30013046-171	3
30013046-172	3
30013046-173	3
30013046-174	3
30013046-181	3
30013046-182	3
30013046-183	3

30013046-184	2
30013046-185	2
30013046-186	3
30013046-187	3
30013046-188	3
30013046-189	3
30013046-190	2
30013046-191	3
30013046-192	3
30013046-195	3
30013046-196	3
30013046-201	3
30013046-202	2
30013046-205	2
30013046-206	2
30013046-211	3
30013046-212	3
30013046-213	1
30013046-215	3
30013046-221	2
30013046-222	2
30013046-223	2
30013046-230	1
30013046-235	2

The bridge drawings were supplemented by the following documents:

1) BMT "Shrimptons Creek Proposed Bridge Detailed Design Flood and Scour Assessment" report reference R.A11013.001.02, October 2021
2) ADW Johnson "Utility Services Report – to accompany the Stage 1 development application for the Ivanhoe Estate Masterplan – A state significant development", 5 October 2018
3) Shelmerdines Consulting Engineers drawing AN-22381, 20/04/2021 rev 0
4) Fibrecorp drawing SK01, 8 Juen 2021, rev 0
5) Sydney Water case 192226ww,7/7/2021 rev 03
6) Sydney Water case 189977pw, 10/6/2021 rev 02

The Bridge Design has been reviewed against the requirements of Road Bridge – Detailed Design condition B103 as shown below

ROAD BRIDGE – DETAILED DESIGN

B103. Detailed design plans, calculations and other supporting documentations prepared by a Chartered Structural Engineer (registered on the NER of Engineers Australia) must be submitted to the Certifier prior to the issue of any Subdivision Works Certificate for the road bridge to be built across Shrimptons Creek connecting the proposed development to Lyonpark Road. The details shall include, but not limited to, the following:

(a) the minimum overall width of the bridge is to be 14 m

(b) the provision of a suitable guardrail along both edges of the bridging structure that complies with Section 2.4.5.3 of AS2890.1-2004 and RMS requirements

(c) provide the minimum height of the trafficable, including vehicle and pedestrian, areas of the bridge. From a stormwater perspective, the report shall clearly demonstrate the impact of the proposed bridge, including but not limited to abutments, piers, wing walls etc.

(d) maintain the height of the lowest structural element of the bridge at the 1% AEP (100-year ARI) flood level + 500 mm freeboard as a minimum

(e) the report shall assess the impact of embankment works on both north-western and north-eastern sides of the bridge on the proposed approach roads and the surrounding properties to ensure any adverse impact from ponding of water (if any) is alleviated

(f) concept drawings, correspondence and approvals from utility authorities with regards to any utility services that will need to be installed in the proposed bridge

(g) scour protection shall be provided for the bridge piers, abutment and constricted creek waterway and riparian corridor for events up to the 2% AEP (50-year ARI). Provision for appropriate plant access to the bridge for maintenance, including for repair and replacement of the scour protection, shall be provided.

The Applicant shall provide an independent review by a suitably qualified structural engineer verifying the design of the bridge and associated structures satisfies (a) to (g) above and all relevant design requirements.

A copy of the approved plans, documentation and independent review, demonstrating compliance with the above, must be provided to the Certifier prior to the commencement of the relevant works.

RBG has undertaken an independent review of the above requirements from evidence presented by the designers and confirm that that the requirements have been met.

(a)	Drawing 106
(b)	Drawing 106
(c)	Drawings 105, 106, Report R.A11013.001.02
(d)	Drawing 105
(e)	Report R.A11013.001.02
(f)	ADW Johnson report, Shelmerdines, Fibrecorp and Sydney Water (2) drawings
(g)	Report R.A11013.001.02

RBG certify that the requirements of B103 have been met as evidenced by the drawings and other documents listed in this letter.

Yours faithfully

ROBERT BIRD GROUP PTY LTD

DR GREGG KLOPP
Senior Associate
CPEng FIEAust

Douglas Partners
Geotechnics / Environment / Groundwater

Douglas Partners Pty Ltd
ABN 75 053 980 117
www.douglaspartners.com.au
96 Hermitage Road
West Ryde NSW 2114
PO Box 472
West Ryde NSW 1685
Phone (02) 9809 0666

Project 86043.03
13 August 2020
R.001.Rev2
SCP

Frasers Property Ivanhoe Pty Ltd
Level 2, 1C Homebush Bay Drive
Rhodes NSW 2138

Attention: Chris Koukoutaris

Email: Chris.Koukoutaris@frasersproperty.com.au

Revised Pavement Thickness Design Advice
Proposed Residential Development
Ivanhoe Estate, Macquarie Park

1. Introduction

This report presents the results of a revised pavement thickness design undertaken by Douglas Partners Pty Ltd (DP) for proposed civil construction works as part of the proposed Ivanhoe Estate development. The work was commissioned by Frasers Property Ivanhoe Pty Ltd.

This revision includes allowance for stone-paved road sections and parking areas, in addition to the deep lift asphaltic concrete pavement design, and assuming the full design traffic loading applies in all areas, and comments raised in discussion with the Civil Engineers (ADW Johnson) for the project.

The proposed Ivanhoe Estate development is primarily high density residential and mixed use. New roads within the site are expected to be managed by the City of Ryde Council following the completion of the development.

Based on information provided by the civil engineers for the project (ADW Johnson), it is understood that the infrastructure works for Stage 1A will comprise two roads. In addition, it is noted that:

- Granite pavers have been specified for parking bays, and for the area associated with the intersection of the two internal roads; and,
- Long-sections provided by ADW Johnson indicate that the roads pass through significant areas of high strength rock (sandstone), based on the existing geotechnical investigation information.

2. Background

2.1 Previous Investigation

Previous, preliminary geotechnical investigation at the greater Ivanhoe Estate site was separately reported in DP's Report 86043.01.R.001.Rev1. The investigation included sampling and testing for

California bearing ratio (CBR) of the various materials, and preliminary advice in relation to pavements.

Preliminary pavement thicknesses were provided in DP's Report 86043.01.R.001.Rev1 for light traffic only.

2.2 City of Ryde Standard Drawings

Subsequent to the preliminary geotechnical investigation report, the City of Ryde has issued standard drawings for typical pavement structure, including for 'Commercial, Industrial, High Density Residential and Mixed Developments' (Drawing CIV.14.2, dated 14 August 2019). Given the high density residential and mixed use proposed for Ivanhoe Estate, this drawing is considered applicable to the site.

The drawings indicate a 'deep lift' pavement profile, and design traffic (DESA) of $1x10^7$, together with layer thicknesses and a minimum 450 mm total pavement profile for pavements over a subgrade with CBR of at least 10%.

The drawing indicates that pavement design is to be carried out in accordance with Austroads Guide to Pavement Technology – Part 2: Pavement Structural Design (2017), referred to as Austroads (2017) in this report.

The City of Ryde also has prepared standard drawing 'Porphyry Setts Vehicular Pavement' (Drawing CIV.13 dated 18/7/2018). This drawing is not considered directly applicable to the subject pavement areas as:

- The thickness of the porphyry setts is considered potentially insufficient for the proposed $1x10^7$ DESAs;
- The pavement detailing does not include appropriate subbase material, as would be expected for a pavement subject to $1x10^7$ DESAs, to inhibit erosion, pumping and similar issues relating to the use of a concrete basecourse.
- The subgrade compaction of 95% is unacceptable.

Drawing CIV.13 has nonetheless been considered to inform the design of the stone-paved areas, as discussed in further detail within this report.

The City of Ryde Drawing PV1.2 for 'Pavement Type Granite' (dated 15/12/17) is relevant to verge areas that will be stone paved, but will not experience any heavy vehicle loads. It also references Drawing PV1.1 for 'Pavement Town Centre Type Concrete' (dated 15/12/17), which indicates a similar pavement.

3. Comments

3.1 Subgrade Conditions

DP's preliminary investigation report 86043.01.R.001.Rev1 suggested design CBR values of 4% to 10% at the site, noting that:

> "The results of testing have indicated CBR values of 4.5% to 45% from samples obtained in the various soils and extremely weathered rocks. Past DP experience has indicated that CBR values of 3% to 10% are generally observed in the natural soils developed from the Mittagong Formation and Hawkesbury Sandstone." and,
>
> "Care must be taken in considering the raw CBR results, which may not represent the behaviour of the soil as a whole, particularly when considering fill materials."

Based on the above recommendations, the adopted design CBR values for Stage 1A are given in Table 1.

Table 1: Design CBR Values

Design CBR Value	Comment
6%	For natural, residual clay soils and clayey filling; and, On soils derived from interbedded shale laminite and sandstone, and low strength sandstone, or underlain by these materials, as these materials may degrade significantly under cyclic loading.
10%	For filling derived from medium or high strength sandstone from the site; and, For subgrades of pavements cut into medium and high strength sandstone bedrock

Higher CBRs are not considered appropriate, as small variations in the condition of the materials, presence of minor defects and changes in construction control can have a significant influence on their behaviour under cyclic loading, whereas improved parameters have limited influence on the pavement design.

During construction, verification CBR testing should be undertaken on the actual subgrade materials to confirm that the conditions are consistent with the design requirements. The suggested CBRs are intended to control, but not eliminate possible areas of weaker subgrade, which would require treatment if encountered.

A CBR value of 4% was recommended in DP's Report 86043.01.R.001.Rev1 for the alluvial clays towards Shrimpton's Creek (below RL 45, south-east of the Stage 1A area). Similar CBRs may possibly be obtained in natural clays derived from the Mittagong Formation, within 70 m of Herring Road, and supported by more recent test information provided to DP in the Macquarie Park area. Such material was not generally identified at the relevant test locations in the Ivanhoe site, where filling was generally underlain by bedrock, although possible natural soil was encountered within 0.5 m

of bedrock level at Bores 31 and 02. These materials may indicate possible areas of subgrade treatment (refer Section 3.4) but are not expected to be extensive within the Stage 1A area.

3.2 Pavement Thickness Design Methodology

Following review of the City of Ryde drawings and discussions with the Client, the design traffic (DESA) of $1x10^7$ was adopted for the design thickness assessment.

The following general methodology was then adopted for the design of the deep lift pavements:

- The 'typical pavement profile' from Council drawings was adopted in a mechanistic-empirical model, and relevant parameters adopted for the various pavement layers based on experience and guidance provided in Austroads (2017). Two layers of AC20 were adopted for the 'intermediate' course, rather than AC28, for ease of sourcing and construction.
- A design traffic distribution was adopted based on existing survey data provided in Austroads (2017) Appendix E;
- Mechanistic-empirical modelling was undertaken of the design pavement thicknesses for the various design CBRs, together with minimum treatments required by Council.

Where a cumulative damage factor (CDF) indicated failure before the design life for a given layer, the layer thickness was adjusted to decrease the CDF to an acceptable level.

The design of the proposed roads surfaced with stone pavers (i.e. granite porphyry setts) required further assessment. The following issues were noted:

- Drawing CIV.13 by Council is not considered appropriate for the adopted traffic volume and it is considered likely that it is intended for lower volume, local traffic roads.
- The design of the pavement has therefore been guided by the City of Ryde Council's Drawing CIV.13, adopting a jointed reinforced concrete pavement (JRCP) design without integrated shoulders, but modified based on Austroads (2017).
- The surface paving type is driven by the landscaping plan and is not subject to DP specification. A minimum paver thickness of 80 mm is recommended for the $1x10^7$ DESA traffic loading, noting that DP also recommends a concrete segmental paver design for this traffic loading.
- Given the proposed stone pavers, the interlock is likely to be heavily influenced by the mortared joints between the pavers. Careful attention should be paid to the construction of joints to improve interlock, and to the surface finish to ensure that it is suitable for the vehicular traffic. As movement of pavers over a flexible road structure would result in earlier cracking of the mortar bed resulting in degradation of the pavement, a rigid (concrete) pavement is considered necessary.
- The design of a concrete base in accordance with Austroads (2017) requires detailed information on the traffic load distribution as well as the traffic volumes, as the performance of concrete pavements can be highly sensitive to variations in (heavy vehicle) traffic loadings. On the subject pavements there is significant uncertainty in relation to the traffic load distribution given both the short to medium term loading during construction of the Ivanhoe Estate, and medium to long term

loading as the road system is developed as part of the staged development. The design has been based on the traffic load distribution information in Appendix E of Austroads (2017) for Pennant Hills Road.

3.3 Pavement Thickness Analysis Results

The pavement thicknesses resulting from the above design methodology and analysis are summarised in Table 2 for the deep lift asphaltic concrete pavement and Table 3 for the stone paved roads.

Table 2: Pavement Thickness – Deep Lift Asphaltic Concrete

Subgrade CBR	6%	10%
Wearing Course thickness (mm) (AC14)	50	50
Intermediate Course thickness (mm) (AC20)	170 (85+85)	150 (75+75)
Base Course thickness (mm) (DGB20)	100	100
Subbase Course thickness (mm) (DGS40)	150	150
Treatment layer thickness (mm) (DGS40)	200	-

The pavement thickness assessment for the deep lift pavement design indicated that tensile cracking at the base of the intermediate course (base of the lower layer) is the governing failure mode.

Table 3: Pavement Thickness – Stone pavers

Subgrade CBR	6% - 10%*
Stone pavers (mm)	80
Mortar bed (mm)	30
Concrete (mm) (f_c=32MPa)	210
Lean-mix concrete subbase** (mm) (f_c = 5MPa, low shrinkage)	150

Note: *subbase requirements are governed by the traffic load and erosion performance requirements, not by the expected 6% to 10% subgrade range.
** The lean-mix concrete subbase replaces the DGB20 subbase nominated in Drawing CIV.13

The pavement thickness assessment for the concrete pavement design indicated that concrete fatigue, rather than erosion, is the governing failure mode for the pavement.

3.4 Pavement Design and Construction Comments

The pavement materials considered in the pavement thickness design have been based on the material specifications, compactions, testing and treatments given in the City of Ryde Drawings CIV.14 (for deep lift) and CIV.13 (for stone paved pavements) except where specifically noted otherwise. This includes the modified binder requirements at intersections and curves, which are considered reasonable and appropriate.

The proposed design thicknesses are suitable for grades of up to 15%.

Interface treatment (i.e. prime, geofabric, adhesives, coats) are not specifically considered within the analysis to determine layer thicknesses and have not been outlined in Tables 2 and 3, above. Those given in the City of Ryde drawings are considered appropriate to include within the pavement design.

For the concrete pavement, a wax emulsion should be applied to the lean-mix concrete subbase to assist with curing, and a bitumen seal with 5-7mm aggregate placed to debond the subbase from the concrete slab.

Interfaces between the pavements will require 150 mm wide concrete edge strips at transverse or longitudinal joints, with dish drains proposed at longitudinal interfaces within bus bays. The interface details shown in CIV.13 are considered suitable.

The SL82 mesh indicated by CIV.13 is suitable for distances of up to 6.0 m to untied joints or edges of the base (i.e. tied widths of up to 12 m). An increased steel area would be required for larger lengths. Joint details for the concrete slab below the pavers are included in Drawing CIV.11, with the following modifications/clarifications:

- At longitudinal joints, tie-bars are to be 12 mm Grade 500N deformed steel bars, 1 m long, placed centrally in the joint;
- Dowels at expansion/contraction joints are to be plain, round 32 mm diameter, grade 250N and 450 mm long

If longitudinal joints are required in the lean concrete subbase for construction purposes, these should be located at a 100 mm to 400 mm offset from longitudinal joints in the base concrete, to reduce the risk of reflective cracking.

3.4.1 Subgrade and Subsurface Drainage

The analysis has considered subgrade materials of CBR of 6% and 10%, which are likely to be extensive at the site. In practice, the 1.0 m of material below the pavement construction influences the design CBR. Assessment of subgrade improvement after Austroads (2017), based on methods from the Japan Road Associaion (1989) indicates that if material with a CBR of 4% is encountered along

the road alignment, then placement of 0.4 m depth of 10% CBR fill would improve the new surface level to an effective CBR of 6%. The overlying pavement thickness (including the DGS40 treatment layer, for deep lift pavement types) may then be based on the CBR of 6%.

In order to achieve these design CBRs, subgrade materials must be compacted to 100% Standard compaction, within 2% of the Standard optimum moisture content. (The 95% compaction indicated by Drawing CIV.13 is considered inadequate.)

For cuts within rock, sudden changes in rock or fill strength at subgrade level, and possible concentrated (perched) seepage through defects in the rock can adversely affect pavement performance. Where excavation into rock is required for the proposed road alignment, it is appropriate to rip and tyne to a depth of 300 mm below the subgrade level, breaking the rock down to a maximum size of 150 mm, with the ripped material re-compacted in situ to 100% Standard compaction to form the road subgrade. Drainage of the rock cut surface should be provided at regular intervals to alleviate possible seepage into the formation, and specific drainage should be provided where seepage is specifically observed, directing seepage out of the pavement. Such seepage flows may be ephemeral, given the significant depth to groundwater observed in groundwater wells at the site, but nonetheless require drainage to avoid excess moisture levels developing within the subgrade. Consideration should also be given to the location of interfaces between the two pavement types, where subsurface drainage is appropriate to ensure that drainage is not obstructed by the change in materials.

If encountered, significant bands of clay or low strength sandstone within otherwise medium or high strength sandstone should be stockpiled separately and treated as a lower CBR (likely 6%) material.

3.4.2 Pavers

The proposed pavers have been dictated by the landscaping plan and are not the subject of DP design. DP has some concern over the use of porphyry setts under the high design traffic load of $1x10^7$ DESAs and cannot guarantee their performance in terms of serviceability even when the structural performance of the pavement is adequate. A minimum paver thickness of 80 mm would generally be adopted for segmental pavers in these traffic conditions, and this is suggested as a minimum thickness for porphyry setts in areas under the full design traffic, unless the supplier is willing to assure the performance of a reduced paver thickness under the proposed design traffic. Nonetheless, DP accepts no responsibility for the performance of the pavers, nor their impact on the actual pavement life.

While it is understood that the pavers will continue away from the road, the design has only been undertaken for the nominated road traffic. Where pavements are not subjected to heavy vehicle traffic, the above structural pavement may be excessive.

DP understand that a modified Drawing PV1.2 is proposed in verge areas that are not subject to heavy traffic, with a paver thickness reduced from 60 mm to 40 mm. The design of such pavements is not dictated by the cyclic loading conditions that govern road design, and is often based on previously established practice rather than formal design procedures. As per the road design, the pavers would not be expected to be a structural component of these pavements (this is supported by the Drawing

PV1.1, which indicates similar pavement thicknesses to PV1.2, less the paver and bedding layers). Therefore reducing the paver thickness of Drawing PV1.2 to 40 mm is not expected to have any influence on the structural performance of the verge pavement, though again it is suggested that the serviceability of the paver thickness be assured by the supplier.

3.4.3 Construction

In practice, the performance of the pavements is often governed by construction control and by the moisture regimes within the subgrade and pavement layers, with pavement design assuming that conditions remain at equilibrium levels over the life of the pavement. Therefore, the design of suitable surface and subsurface drainage for the site, including drainage of cut surfaces, will be important to ensuring suitable pavement performance. The design, construction and maintenance of surface and subsurface drainage systems should be undertaken in accordance with the relevant Austroads guides.

4. Limitations

Douglas Partners (DP) has prepared this letter report for this project at Ivanhoe Estate in accordance with DP's email proposal dated 12 February 2020, acceptance received from Chris Koukoutaris dated 12 February 2020, and subsequent email requests for additional work. This report is provided for the exclusive use of Frasers Property Ivanhoe Pty Ltd for this project only and for the purposes as described in the report. It should not be used by or relied upon for other projects or purposes on the same or other site or by a third party. Any party so relying upon this report beyond its exclusive use and purpose as stated above, and without the express written consent of DP, does so entirely at its own risk and without recourse to DP for any loss or damage. In preparing this report DP has necessarily relied upon information provided by the client and/or their agents.

DP's advice is based upon the conditions encountered during previous site investigations, and the relevant limitations outlined in the relevant report. DP cannot be held responsible for interpretations or conclusions made by others unless they are supported by an expressed statement, interpretation, outcome or conclusion stated in this report.

This report must be read in conjunction with all of the attached and should be kept in its entirety without separation of individual pages or sections. DP cannot be held responsible for interpretations or conclusions made by others unless they are supported by an expressed statement, interpretation, outcome or conclusion stated in this report.

This report, or sections from this report, should not be used as part of a specification for a project, without review and agreement by DP. This is because this report has been written as advice and opinion rather than instructions for construction.

The contents of this report do not constitute formal design components such as are required, by the Health and Safety Legislation and Regulations, to be included in a Safety Report specifying the hazards likely to be encountered during construction and the controls required to mitigate risk. This design process requires risk assessment to be undertaken, with such assessment being dependent

upon factors relating to likelihood of occurrence and consequences of damage to property and to life. This, in turn, requires project data and analysis presently beyond the knowledge and project role respectively of DP. DP may be able, however, to assist the client in carrying out a risk assessment of potential hazards contained in the Comments section of this report, as an extension to the current scope of works, if so requested, and provided that suitable additional information is made available to DP. Any such risk assessment would, however, be necessarily restricted to the geotechnical components set out in this report and to their application by the project designers to project design, construction, maintenance and demolition.

Please contact the undersigned if you have any questions on this matter.

Yours faithfully
Douglas Partners Pty Ltd

Reviewed by

Sally Peacock
Geotechnical Engineer/Associate

Ray Blinman
Principal

Attachments: About this Report

About this Report

Douglas Partners

Introduction

These notes have been provided to amplify DP's report in regard to classification methods, field procedures and the comments section. Not all are necessarily relevant to all reports.

DP's reports are based on information gained from limited subsurface excavations and sampling, supplemented by knowledge of local geology and experience. For this reason, they must be regarded as interpretive rather than factual documents, limited to some extent by the scope of information on which they rely.

Copyright

This report is the property of Douglas Partners Pty Ltd. The report may only be used for the purpose for which it was commissioned and in accordance with the Conditions of Engagement for the commission supplied at the time of proposal. Unauthorised use of this report in any form whatsoever is prohibited.

Borehole and Test Pit Logs

The borehole and test pit logs presented in this report are an engineering and/or geological interpretation of the subsurface conditions, and their reliability will depend to some extent on frequency of sampling and the method of drilling or excavation. Ideally, continuous undisturbed sampling or core drilling will provide the most reliable assessment, but this is not always practicable or possible to justify on economic grounds. In any case the boreholes and test pits represent only a very small sample of the total subsurface profile.

Interpretation of the information and its application to design and construction should therefore take into account the spacing of boreholes or pits, the frequency of sampling, and the possibility of other than 'straight line' variations between the test locations.

Groundwater

Where groundwater levels are measured in boreholes there are several potential problems, namely:

- In low permeability soils groundwater may enter the hole very slowly or perhaps not at all during the time the hole is left open;
- A localised, perched water table may lead to an erroneous indication of the true water table;
- Water table levels will vary from time to time with seasons or recent weather changes. They may not be the same at the time of construction as are indicated in the report; and
- The use of water or mud as a drilling fluid will mask any groundwater inflow. Water has to be blown out of the hole and drilling mud must first be washed out of the hole if water measurements are to be made.

More reliable measurements can be made by installing standpipes which are read at intervals over several days, or perhaps weeks for low permeability soils. Piezometers, sealed in a particular stratum, may be advisable in low permeability soils or where there may be interference from a perched water table.

Reports

The report has been prepared by qualified personnel, is based on the information obtained from field and laboratory testing, and has been undertaken to current engineering standards of interpretation and analysis. Where the report has been prepared for a specific design proposal, the information and interpretation may not be relevant if the design proposal is changed. If this happens, DP will be pleased to review the report and the sufficiency of the investigation work.

Every care is taken with the report as it relates to interpretation of subsurface conditions, discussion of geotechnical and environmental aspects, and recommendations or suggestions for design and construction. However, DP cannot always anticipate or assume responsibility for:

- Unexpected variations in ground conditions. The potential for this will depend partly on borehole or pit spacing and sampling frequency;
- Changes in policy or interpretations of policy by statutory authorities; or
- The actions of contractors responding to commercial pressures.

If these occur, DP will be pleased to assist with investigations or advice to resolve the matter.

About this Report

Site Anomalies

In the event that conditions encountered on site during construction appear to vary from those which were expected from the information contained in the report, DP requests that it be immediately notified. Most problems are much more readily resolved when conditions are exposed rather than at some later stage, well after the event.

Information for Contractual Purposes

Where information obtained from this report is provided for tendering purposes, it is recommended that all information, including the written report and discussion, be made available. In circumstances where the discussion or comments section is not relevant to the contractual situation, it may be appropriate to prepare a specially edited document. DP would be pleased to assist in this regard and/or to make additional report copies available for contract purposes at a nominal charge.

Site Inspection

The company will always be pleased to provide engineering inspection services for geotechnical and environmental aspects of work to which this report is related. This could range from a site visit to confirm that conditions exposed are as expected, to full time engineering presence on site.

Douglas Partners
Geotechnics / Environment / Groundwater

Douglas Partners Pty Ltd
ABN 75 053 980 117
www.douglaspartners.com.au
96 Hermitage Road
West Ryde NSW 2114
PO Box 472
West Ryde NSW 1685
Phone (02) 9809 0666

Frasers Property Ivanhoe Pty Ltd
Level 2/1C Homebush Bay Drive
Rhodes NSW 2138

Project 86043.11
12 August 2021
R.001.Rev0
DS:sp

Attention: Chris Koukoutaris

Email: Chris.Koukoutaris@fraserproperty.com.au

Assessment of Pavement Subgrade Conditions
Stage 1B - Ivanhoe Estate, Macquarie Park
Epping Road and Lyon Park Road, Macquarie Park

1. Introduction

This report presents a desktop assessment of subgrade conditions for the proposed Stage 1B road upgrade works of the Ivanhoe Estate development. The assessment was commissioned in an email dated 28 July 2021 by Chris Koukoutaris of Fraser Property Ivanhoe Pty Ltd and was undertaken in accordance with Douglas Partners Pty Ltd (DP) proposal email dated 28 July 2021. The road location is shown in Figure 1 below.

Based on the engineering plans of infrastructure works – Stage 1B (Project 30001(2) Rev B dated 5 July 2021) prepared by ADW Johnson (ADW), it is understood that the infrastructure works for Stage 1B will comprise the main road extension, which connects Road No. 1 and 2 of Stage 1A to Lyon Park Road. In addition, it is noted that:

- Long sections indicate that the new roads will pass through areas previously occupied by houses, existing turning heads, temporary swales and skate park which will all need to be removed; and,
- Earthworks within the proposed roads range from 0.7 m of cut to 3.5 m of fill near Shrimpton's Creek. It is understood all fill for the use of embankments will be 'site-won' material.

A pavement thickness design has been prepared previously for the Stage 1A area of the Ivanhoe Estate development, on the upper slopes of the greater Ivanhoe Estate area, in DP report 86043.03.R.001.Rev2 dated 13 August 2020. This report compares the results of geotechnical investigation for the Stage 1B area to those adopted for the pavement design in the Stage 1A area and provides comment on the viability of adopting the Stage 1A design in the Stage 1B area, excluding the car park (private roads) at 2-4 Lyonpark Road.

Figure 1: Proposed Stage 1B Road Network (in red)

A separate pavement design report has been previously provided for the LIF car park (DP Report 86043.10.R.001.Rev0, dated 30 June 2021) which is on, and will remain as, private land.

2. Background

A review was undertaken of relevant soil test data from the following previous geotechnical investigations by DP:

- Report of Preliminary Geotechnical Investigation at the greater Ivanhoe Estate site was separately reported in DP's report 86043.01.R.001.Rev1. The investigation included sampling and testing for CBR of the various materials, and preliminary advice in relations to pavements.
- Investigation Summary Report 86043.01.R.003.Rev0 dated December 2017. The investigation included drilling one borehole (LP1) to a depth of 9 m to provide preliminary geotechnical information for the proposed bridge at Shrimpton's Creek.
- Report on Geotechnical Investigation, Proposed Road Development, Lyonpark Road, Macquarie Park, DP report 86043.02.R.001.Rev0. The investigation included a broad condition

assessment together with boreholes (for the purpose of this report LP31 to LP36 and LP101 were assessed) and laboratory testing of selected samples.

- Pavement thickness design report 86043.03.R.001.Rev2 dated 13 August 2020 for Stage 1A.
- Report on Geotechnical Investigation of the Stage 2 sites (C2, C3 and C4). Reports 86043.06.R.001.Rev1, R.002.Rev2 and R0.C20Rev2, dated 6 August 2021.

Laboratory testing undertaken for the previous investigations included the following:

- DP's preliminary investigation report 86043.01.R.001.Rev1 suggested design CBR values of 4% to 10% at the site, noting that the results of testing have indicated CBR values of 9% to 45% from samples obtained in the various fill and residual soils and extremely weathered rocks, and 4.5% in a clay material (possible fill) sample in the alluvial flats area (BH47).
- DP's geotechnical investigation report 86043.02.R.001.Rev0 dated April 2018 noted that tests on subgrade comprising fill indicated CBRs of 5% at LP101 (Lyonpark Road) and 12% and 60% below the driveway of 2-4 Lyonpark Road.

3. Results of Assessment

These results, and review of the broader ground conditions indicated that the Stage 1B subgrade conditions can be broadly separated into the following three areas:

Table 1: Summary of Geotechnical Conditions

Site area	Comment on Conditions with respect to Stage 1A
Sloping Ground in the Greater Ivanhoe Estate (ground surface above approximately RL 45.5)	Likely subgrade conditions in residual soils and very low to low strength rock. Similar ground conditions to the Stage 1A area.
Alluvial flats, west of Shrimpton's Creek (ground surface below RL 45.5)	Only limited investigation has been undertaken in this area (BH10 and BH11, of DP Report 86043.01.R.001.Rev1), but appears to indicate a transition to fill underlain by more variable, alluvial soils. These include soft to firm sandy clay at BH10, from 1 m to 2.1 m depth, and stiff clayey silt at BH11, from 0.7 m to 1.9 m depth. These materials may not achieve the CBR of 4% proposed by the Stage 1A design and may also be an unsuitable foundation stratum for new embankments. Local excavation and replacement of soft to firm materials would be appropriate, with the new design subgrade then based on the CBR of the replacement material. Where more than 1 m of engineered fill is to be placed over the existing ground surface level to reach subgrade level, then the ground conditions are relevant to embankment foundations (eg stability and deformation considerations govern) but the pavement

Site area	Comment on Conditions with respect to Stage 1A
	design may be based on the properties of the engineered fill (noting that pavement performance will depend on both the embankment foundation and pavement design).
Lyonpark link road, east of Shrimpton's Creek.	Variable fill underlain by residual clay soils. The fill must be excavated and replaced as controlled fill to achieve an appropriate subgrade condition. As controlled fill, these materials are expected to achieve a CBR of at least 4%, and more likely 6%. A DCP result indicating poorly compacted fill was obtained at LP101, in Lyonpark Road near the intersection with the link road. While it is not known if this extends to the subject subgrade area, removal and replacement of such material would generally be required.

4. Comments

DP have reviewed the previous report and confirm that the ground conditions in the Stage 1B area are generally consistent with those assumed in the Stage 1A pavement design report, except for the low-lying alluvial (flat) area, on either side of Shrimpton's Creek. The Stage 1A pavement design report may therefore provisionally be extended to the Stage 1B area, though more detailed assessment may be required in the poorer ground indicated in the alluvial areas, depending on the subgrade levels, and preferred approach to embankment and pavement design. Further assessment may also be warranted in these areas for embankment design.

Additional investigation and testing in the alluvial areas is recommended to assess the extent of weak ground and possible replacement for subgrade or foundation requirements. Excavated soft to firm materials, are unlikely to be suitable for re-use as controlled fill, unless suitably moisture treated prior to compaction and possibly blended with other soils, cement and/or lime.

Further geotechnical assessment of the embankment foundations and stability would be appropriate, depending on the preferred construction approach (eg excavate and replace) and environmental requirements.

It should also be noted that existing basin swales intersect the Road 1 and 2 extension. Ground conditions below geotextiles may be susceptible to local water ingress and softening. Prior to subgrade preparation, any wet and soft areas should be removed and remediated, as per section 3.2 of the DP report 86043.03.R.001.Rev2.

During construction, verification CBR testing should be undertaken on the actual subgrade materials to confirm that the conditions are consistent with the design requirements.

5. Limitations

Douglas Partners (DP) has prepared this report for this project at Stage 1B, Ivanhoe Place, Macquarie Park , in accordance with DP's email proposal dated 28/07/2021 and acceptance received from Chris Koukoutaris dated 28 July 2021. The work was carried out under the Consultancy Services Deed between Frasers Property Ivanhoe Pty Ltd and Douglas Partners Pty Ltd dated 15 November 2017. This report is provided for the exclusive use of Frasers Property Ivanhoe Pty Ltd for this project only and for the purposes as described in the report. It should not be used by or relied upon for other projects or purposes on the same or other site or by a third party. Any party so relying upon this report beyond its exclusive use and purpose as stated above, and without the express written consent of DP, does so entirely at its own risk and without recourse to DP for any loss or damage. In preparing this report DP has necessarily relied upon information provided by the client and/or their agents.

The results provided in the report are indicative of the sub-surface conditions on the site only at the specific sampling and/or testing locations, and then only to the depths investigated and at the time the work was carried out. Sub-surface conditions can change abruptly due to variable geological processes and also as a result of human influences. Such changes may occur after DP's field testing has been completed.

DP's advice is based upon the conditions encountered during the previous investigations described in this report. The accuracy of the advice provided by DP in this report may be affected by undetected variations in ground conditions across the site between and beyond the sampling and/or testing locations. The advice may also be limited by budget constraints imposed by others or by site accessibility.

The assessment of atypical safety hazards arising from this advice is restricted to the geotechnical components set out in this report and based on known project conditions and stated design advice and assumptions. While some recommendations for safe controls may be provided, detailed 'safety in design' assessment is outside the current scope of this report and requires additional project data and assessment.

This report must be read in conjunction with all of the attached and should be kept in its entirety without separation of individual pages or sections. DP cannot be held responsible for interpretations or conclusions made by others unless they are supported by an expressed statement, interpretation, outcome or conclusion stated in this report.

This report, or sections from this report, should not be used as part of a specification for a project, without review and agreement by DP. This is because this report has been written as advice and opinion rather than instructions for construction.

Please contact the undersigned if you have any questions on this report.

Yours faithfully
Douglas Partners Pty Ltd

David Smith
Senior Geotechnical Engineer

Reviewed by

Bruce McPherson
Principal

Attachments: About this Report

About this Report

Douglas Partners

Introduction

These notes have been provided to amplify DP's report in regard to classification methods, field procedures and the comments section. Not all are necessarily relevant to all reports.

DP's reports are based on information gained from limited subsurface excavations and sampling, supplemented by knowledge of local geology and experience. For this reason, they must be regarded as interpretive rather than factual documents, limited to some extent by the scope of information on which they rely.

Copyright

This report is the property of Douglas Partners Pty Ltd. The report may only be used for the purpose for which it was commissioned and in accordance with the Conditions of Engagement for the commission supplied at the time of proposal. Unauthorised use of this report in any form whatsoever is prohibited.

Borehole and Test Pit Logs

The borehole and test pit logs presented in this report are an engineering and/or geological interpretation of the subsurface conditions, and their reliability will depend to some extent on frequency of sampling and the method of drilling or excavation. Ideally, continuous undisturbed sampling or core drilling will provide the most reliable assessment, but this is not always practicable or possible to justify on economic grounds. In any case the boreholes and test pits represent only a very small sample of the total subsurface profile.

Interpretation of the information and its application to design and construction should therefore take into account the spacing of boreholes or pits, the frequency of sampling, and the possibility of other than 'straight line' variations between the test locations.

Groundwater

Where groundwater levels are measured in boreholes there are several potential problems, namely:

- In low permeability soils groundwater may enter the hole very slowly or perhaps not at all during the time the hole is left open;
- A localised, perched water table may lead to an erroneous indication of the true water table;
- Water table levels will vary from time to time with seasons or recent weather changes. They may not be the same at the time of construction as are indicated in the report; and
- The use of water or mud as a drilling fluid will mask any groundwater inflow. Water has to be blown out of the hole and drilling mud must first be washed out of the hole if water measurements are to be made.

More reliable measurements can be made by installing standpipes which are read at intervals over several days, or perhaps weeks for low permeability soils. Piezometers, sealed in a particular stratum, may be advisable in low permeability soils or where there may be interference from a perched water table.

Reports

The report has been prepared by qualified personnel, is based on the information obtained from field and laboratory testing, and has been undertaken to current engineering standards of interpretation and analysis. Where the report has been prepared for a specific design proposal, the information and interpretation may not be relevant if the design proposal is changed. If this happens, DP will be pleased to review the report and the sufficiency of the investigation work.

Every care is taken with the report as it relates to interpretation of subsurface conditions, discussion of geotechnical and environmental aspects, and recommendations or suggestions for design and construction. However, DP cannot always anticipate or assume responsibility for:

- Unexpected variations in ground conditions. The potential for this will depend partly on borehole or pit spacing and sampling frequency;
- Changes in policy or interpretations of policy by statutory authorities; or
- The actions of contractors responding to commercial pressures.

If these occur, DP will be pleased to assist with investigations or advice to resolve the matter.

About this Report

Site Anomalies

In the event that conditions encountered on site during construction appear to vary from those which were expected from the information contained in the report, DP requests that it be immediately notified. Most problems are much more readily resolved when conditions are exposed rather than at some later stage, well after the event.

Information for Contractual Purposes

Where information obtained from this report is provided for tendering purposes, it is recommended that all information, including the written report and discussion, be made available. In circumstances where the discussion or comments section is not relevant to the contractual situation, it may be appropriate to prepare a specially edited document. DP would be pleased to assist in this regard and/or to make additional report copies available for contract purposes at a nominal charge.

Site Inspection

The company will always be pleased to provide engineering inspection services for geotechnical and environmental aspects of work to which this report is related. This could range from a site visit to confirm that conditions exposed are as expected, to full time engineering presence on site.

Douglas Partners

Geotechnics / Environment / Groundwater

Integrated Practical Solutions

Report on Desktop Study

Proposed Residential Development - Carpark
Ivanhoe Place, Macquarie Park

Prepared for
Frasers Property Ivanhoe Pty Ltd

Project 86043.10
June 2021

Douglas Partners
Geotechnics / Environment / Groundwater

Document History

Document details

Project No.	86043.10	Document No.	R.001.Rev0
Document title	Report on Desktop Study Proposed Residential Development - Carpark		
Site address	Ivanhoe Place, Macquarie Park		
Report prepared for	Frasers Property Ivanhoe Pty Ltd		
File name	86043.10.R.001.Rev0		

Document status and review

Status	Prepared by	Reviewed by	Date issued
Revision 0	David Smith	Konrad Schultz	30 June 2021

Distribution of copies

Status	Electronic	Paper	Issued to
Revision 0	1		Chris Koukoutaris, Frasers Property Ivanhoe Pty Ltd

The undersigned, on behalf of Douglas Partners Pty Ltd, confirm that this document and all attached drawings, logs and test results have been checked and reviewed for errors, omissions and inaccuracies.

	Signature	Date
Author		30 June 2021
Reviewer		30 June 2021

bsi. ISO 9001 Quality Management
FS 604853

Douglas Partners Pty Ltd
ABN 75 053 980 117
www.douglaspartners.com.au
96 Hermitage Road
West Ryde NSW 2114
PO Box 472
West Ryde NSW 1685
Phone (02) 9809 0666

Table of Contents

Page

1. Introduction 1
2. Background 1
3. Site Description 1
4. Regional Mapping 2
5. Geotechnical Conditions 2
6. Proposed Development 3
7. Comments 3
   - 7.1 Site Preparation 3
   - 7.2 Excavation Conditions 4
   - 7.3 Design Inputs 4
     - 7.3.1 Client Supplied Data 4
     - 7.3.2 Assumed Data 4
     - 7.3.3 Pavement Subgrade 5
     - 7.3.4 Determination Methods 5
   - 7.4 Pavement Thickness 5
   - 7.5 Comments on Construction 6
8. Limitations 7

Appendix A: About This Report

Report on Desktop Study
Proposed Residential Development - Carpark
Ivanhoe Place, Macquarie Park

1. Introduction

This report presents a pavement thickness design for the proposed carpark upgrade at Ivanhoe Place, Macquarie Park. The assessment was commissioned in an email dated 24 May 2021 by Chris Koukoutaris of Frasers Property Ivanhoe Pty Ltd and was undertaken in accordance with Douglas Partners Pty Ltd (DP) proposal email dated 24 May 2021.

It is understood the carpark upgrade works will include tying new driveways into Lyon Park Road and a proposed through road along the northern boundary. Sections of the carpark are to be reconstructed using concrete segmental pavers within the main trafficable area, to match the existing pavement profile. The site will undergo cut and fill earthworks in the order of 0.4 m and 1.6 m, respectively.

The purpose of this study was to determine an appropriate pavement thickness for the carpark upgrade area based on information provided by our client. Comments relevant to design and construction practice are given herein. It should be noted that DP were not requested to comment on the current condition of the existing pavement.

2. Background

DP has previously undertaken previous geotechnical investigations within the site. These investigations were reported as follows:

- Report on Geotechnical Investigation, Proposed Road Development, 2-4 Lyon Park Road, Macquarie Park, DP Report 86043.02.R.001.Rev0 dated 23 April, 2018; and,
- Investigation Summary Report, Proposed Link Road, 2-4 Lyon Park Road, Macquarie Park, DP report 86043.02.R.004.Rev1 dated 7 May 2018.

3. Site Description

The greater site at 2-4 Lyonpark Road is approximately rectangular in shape, and occupied by a central, multi-storey commercial building with three basement parking levels. The site has a south-eastern frontage to Lyonpark Road, a rear, north-western boundary at Shrimptons Creek, and shared boundaries with commercial properties to the south-west and north-east.

The carpark area is currently occupied by near-level and gently sloping existing driveway access roads and near-level to sloping landscaped areas. Ground levels generally slope down towards Shrimptons Creek, although batters slope down from the toe of an existing retaining wall in some areas, particularly towards the rear of the site.

The existing pavement comprises interlocking segmental paving blocks and is generally in good condition. Pavement levels within the subject development area slope gently down from approximately RL 49 at Lyon Park Road towards Shrimptons Creek at approximately 1° to 2°.

Figure 1: View of the existing carpark

4. Regional Mapping

Reference to the Sydney 1:100 000 Soil Landscape Series Sheet indicates that the site is underlain by the residual Lucas Heights soil landscape towards Shrimptons Creek, and by the erosional Glenorie soil landscape towards Lyon Park Road. These natural soils are likely to comprise sandy clay and clayey sand soils, possibly with some silty clay.

Reference to the Sydney Geology Series Sheet, suggests that the site is underlain by Hawkesbury Sandstone, typically comprising medium to coarse grained sandstone with very minor shale and laminite lenses.

5. Geotechnical Conditions

The geotechnical conditions for the site were determined from a review of an existing geotechnical summary report carried out previously by DP. The report summary (Ref: 86043.02.R.004.Rev1 dated 7 May 2018) was prepared by DP and was based on a subsurface investigation undertaken in 2018.

The results of boreholes, specifically in the pavement areas (LP32 and LP35), can be broadly summarised as follows:

- Pavers – underlain by bedding sand to 0.12 m to 0.13 m depth; underlain by,
- Filling – apparently well-compacted, gravelly sand filling (pavement basecourse) to 0.45 m to 0.5 m depth; underlain by,
- Filling – apparently moderately compacted, sand and gravelly sand filling with trace clay to the limit of investigation.

The results of boreholes in the landscaped areas (LP31, LP33, LP34 and LP36) can be broadly summarised as follows:

- Filling – topsoil to 0.05 m to 0.1 m; underlain by,
- Filling – typically poorly and moderately compacted sand and gravelly sand filling with traces of silt and clay to depths of 0.9 m to more than 1 m; underlain by,
- Clay and Clayey Sand – very stiff clay and dense clayey sand.

Groundwater was not identified at the site in any boreholes drilled during the investigation. . It should be noted that groundwater levels are transient and that fluctuations may occur in response to climatic and seasonal conditions.

6. Proposed Development

It is understood the carpark upgrade works will include tying new driveways into Lyon Park Road and a proposed through road along the northern boundary. Sections of the carpark are to be reconstructed using concrete segmental pavers within the main trafficable area of the carpark, to match the existing pavement profile.

Reference to long sections *210506 – LIF Carpark* provided by ADW Johnson indicate minor cuts of 0.4 m depth and filling, mainly in Driveway No.1, of up to approximately 1.6 m.

7. Comments

7.1 Site Preparation

Site and subgrade preparation will be required prior for pavement rectification of the roads. Earthworks recommendations provided in this report should be complemented by reference to AS 3789-2007 Guidelines on earthworks for commercial and residential developments. The following methodology is suggested for full pavement reconstruction, based on a 20 year design life according to Austroads' "Guide to Pavement Technology Part 2 Pavement Structural Design (2017)":

- Remove all pavement layers down to the subgrade including the removal of all unsuitable subgrade materials such as topsoil, vegetation and other unsuitable materials.

- Existing pavement materials may be removed from site or reused as engineered filling, subject to confirmation of its suitability by an experienced geotechnical engineer during construction;
- Test rolling of the stripped subgrade should be carried out before the placement of any pavement layers. Test rolling should comprise six passes of a smooth drum roller (say at least 10 tonnes). The final pass should be carried out under the observation of a geotechnical engineer to identify any soft or heaving zones. Any such zones should be over-excavated and replaced with suitable filling, as per the recommendations of the geotechnical engineer;
- After proof rolling, place approved fill in uniform thickness layers not exceeding 300 mm loose thickness and compact each layer to a minimum dry density ratio of 98% Standard, increasing to 100% Standard within the upper 0.5 m of the subgrade. Ensure each fill layer is appropriately tested by the geotechnical consultant to verify the required compaction criterion has been achieved. Testing should preferably be performed in accordance with AS3798-2007 Guidelines on Earthworks for Commercial and Residential Developments; and
- Fill and subgrade materials should be placed and maintained at a moisture content between -2% to +2% of Standard OMC.

7.2 Excavation Conditions

Construction of new pavement is expected to require excavation to 0.4 m to 0.6 m below the existing surface level. Based on the borehole information, excavation to this depth is expected to encounter pavement materials, filling and possible residual soils. Pavements and other similar obstructions may also require the use of light ripping assistance to loosen prior to excavation.

All excavated materials to be removed from site will need to be disposed of in accordance with the provisions of the current legislation and guidelines including the Waste Classification Guidelines (NSW EPA, 2014). This includes filling and natural materials that may be removed from site. Accordingly, environmental testing will need to be carried out to classify any spoil to be removed from site.

7.3 Design Inputs

7.3.1 Client Supplied Data

To assist the pavement thickness determination, the following details were provided by the client.

- It is understood the site will facilitate light vehicle traffic and service trucks to an existing loading dock.
- A segmental pavement type has been requested as a like-for-like replacement of the existing pavement.

7.3.2 Assumed Data

In addition to the supplied data, the following assumptions were made by DP to complete the design process. These assumptions should be reviewed by the client and end user of the facility to confirm their agreement or otherwise. If any inconsistencies are identified between these assumptions and the project requirements, then the resulting pavement thickness designs outlined herein may need to be amended.

- A design ESA of 1 x 10^6 has been assumed in the absence of data to contrary;
- The total vehicle movements are based on a 20-year design period;
- The carpark is for private use only with service trucks >3 tonne making regular deliveries;
- Category A concrete pavers with a minimum 80 mm thickness are appropriate for the pavement and are suitable to match in with the existing pavers on the site;
- Beneficial reuse of existing site materials has not been considered; and,
- An edge constraint beam is required at the interface of the new and existing pavements to limit the effects of rapidly exacerbated pavement deterioration along the pavement edge that is not reconstructed. This is a common occurrence with partial pavement reconstruction projects.

7.3.3 Pavement Subgrade

The results of previous geotechnical investigations by DP indicated CBR values of 12% or higher for the subgrade fill on the site. This was based on the results of two laboratory four day soaked CBR tests that were subjected to a 4.5 kg surcharge mass. Given the limited reliability of CBR values generally anticipated for the site locality and the possible plasticity of the clay within the fill, DP recommends adopting presumptive design CBR values of 4% and 6%, with subgrade CBR values to be verified during construction. A pavement thickness for each CBR value is presented herein.

7.3.4 Determination Methods

Pavement thicknesses were determined using mechanistic computer analyses. The segmental pavement was analysed using the Designpave software, as obtained from the Concrete Masonry Association of Australia (CMAA). Reference was also made to CMAA Concrete Segmental Pavements – Design Guide for Residential Accessways and Roads. In addition, pavement material parameters were cross checked and modelled on commonly adopted values outlined in the Austroads design procedures (AGPT02-17 Guide to Pavement Technology Part 2 Pavement Structural Design).

7.4 Pavement Thickness

From the analyses, the following pavement thicknesses were determined. The selection of a specific pavement thickness should be based on the results of subgrade CBR verification tests. Pavement thickness options are outlined in Table 1.

Pavement Layer	Material	Thickness (mm)	
Wearing Course	Category A Concrete Paver	80	80
Bedding	Sand	20	20
Base	DGB20 – Unbound	120	120
Subbase	DGS20 - Unbound	320	230
Subgrade	Fill / Gravelly Sand	CBR 4%	CBR 6%
Total Pavement Thickness (mm)		530	450

The unbound pavement thicknesses were determined using elastic modulus values of 3000 MPa for the concrete pavers, 200 MPa for the bedding sand, 350 MPa for the unbound base and 10xCBR in MPa for the subgrade layer.

7.5 Comments on Construction

The above pavement thicknesses are based on adequate surface and subsurface drainage being provided to the pavement. Surface drainage should include the regrading of any misshapen surfaces (i.e. those with depressions or ruts) so that surface runoff can enter drainage pits without hinderance or interruption. Subsurface drainage should be provided at the base of all trench lines and directly below the proposed interface between the new and existing pavement areas. All drainage pipes, including stormwater and other services should be wholly located below the subgrade surface. Services should be wholly installed prior to placement and compaction of overlying pavement layers, so that there is no discontinuity within the pavement across service trenches.

The interface between the new and existing pavement areas (i.e. along the reconstruction edge) will become a weak point within the completed partially reconstructed pavement due to the introduction of a discontinuity of pavement type and construction along the constructed joint. Typically, such a joint results in the expediting of distress within the old pavement left in place, which in turn, progresses into the edge of the newly constructed pavement area. This is due to the difference in in-service deflection response across the joint under the same load when spread over two different pavement types. To reduce these effects, it is suggested that an internal edge restraint beam is constructed between the two pavements.

Construction of all pavement layers should be undertaken with thorough geotechnical oversight and be accompanied by regular testing for material type, condition and compaction. Materials types and their minimum conditions are outlined above with Tables 1 and 2 and should also comply with TfNSW Specification 3051, or as approved by Council. Material compaction should achieve the following minimum dry density ratios, with
all layers satisfying a in situ moisture content at the time of compaction that is within 2% of the Standard optimum moisture content.

The following minimum dry density ratios (AS1289.5.4.1–2007) must be achieved during construction:

- Basecourse 98% Modified;
- Subbase 98% Modified; and
- Subgrade 100% Standard.

Geotechnical engineering inspections should be undertaken on excavation of the site, on completion of site stripping, at the completion of subgrade preparation and on completion of each individual layer of the pavement. Inspection should include proof rolling assessments. The contractor should also be required to provide survey levels for top of all individual pavement layers to confirm that the minimum pavement thickness has been provided.

8. Limitations

Douglas Partners (DP) has prepared this report for this project at Ivanhoe Place, Macquarie Park in accordance with DP's proposal dated 24 May 2021 and acceptance received from Chris Koukoutaris dated 24 May 2021. The work was carried out under DP's Conditions of Engagement. This report is provided for the exclusive use of Frasers Property Ivanhoe Pty Ltd for this project only and for the purposes as described in the report. It should not be used by or relied upon for other projects or purposes on the same or other site or by a third party. Any party so relying upon this report beyond its exclusive use and purpose as stated above, and without the express written consent of DP, does so entirely at its own risk and without recourse to DP for any loss or damage. In preparing this report DP has necessarily relied upon information provided by the client and/or their agents.

The results provided in the report are indicative of the sub-surface conditions on the site only at the specific sampling and/or testing locations, and then only to the depths investigated and at the time the work was carried out. Sub-surface conditions can change abruptly due to variable geological processes and also as a result of human influences. Such changes may occur after DP's field testing has been completed.

DP's advice is based upon the conditions encountered during this investigation. The accuracy of the advice provided by DP in this report may be affected by undetected variations in ground conditions across the site between and beyond the sampling and/or testing locations. Site specific investigations will be required as part of the design process.

The assessment of atypical safety hazards arising from this advice is restricted to the geotechnical components set out in this report and based on known project conditions and stated design advice and assumptions. While some recommendations for safe controls may be provided, detailed 'safety in design' assessment is outside the current scope of this report and requires additional project data and assessment.

This report must be read in conjunction with all of the attached and should be kept in its entirety without separation of individual pages or sections. DP cannot be held responsible for interpretations or conclusions made by others unless they are supported by an expressed statement, interpretation, outcome or conclusion stated in this report.

This report, or sections from this report, should not be used as part of a specification for a project, without review and agreement by DP. This is because this report has been written as advice and opinion rather than instructions for construction.

Douglas Partners Pty Ltd

Appendix A

About This Report

About this Report

Douglas Partners

Introduction

These notes have been provided to amplify DP's report in regard to classification methods, field procedures and the comments section. Not all are necessarily relevant to all reports.

DP's reports are based on information gained from limited subsurface excavations and sampling, supplemented by knowledge of local geology and experience. For this reason, they must be regarded as interpretive rather than factual documents, limited to some extent by the scope of information on which they rely.

Copyright

This report is the property of Douglas Partners Pty Ltd. The report may only be used for the purpose for which it was commissioned and in accordance with the Conditions of Engagement for the commission supplied at the time of proposal. Unauthorised use of this report in any form whatsoever is prohibited.

Borehole and Test Pit Logs

The borehole and test pit logs presented in this report are an engineering and/or geological interpretation of the subsurface conditions, and their reliability will depend to some extent on frequency of sampling and the method of drilling or excavation. Ideally, continuous undisturbed sampling or core drilling will provide the most reliable assessment, but this is not always practicable or possible to justify on economic grounds. In any case the boreholes and test pits represent only a very small sample of the total subsurface profile.

Interpretation of the information and its application to design and construction should therefore take into account the spacing of boreholes or pits, the frequency of sampling, and the possibility of other than 'straight line' variations between the test locations.

Groundwater

Where groundwater levels are measured in boreholes there are several potential problems, namely:

- In low permeability soils groundwater may enter the hole very slowly or perhaps not at all during the time the hole is left open;
- A localised, perched water table may lead to an erroneous indication of the true water table;
- Water table levels will vary from time to time with seasons or recent weather changes. They may not be the same at the time of construction as are indicated in the report; and
- The use of water or mud as a drilling fluid will mask any groundwater inflow. Water has to be blown out of the hole and drilling mud must first be washed out of the hole if water measurements are to be made.

More reliable measurements can be made by installing standpipes which are read at intervals over several days, or perhaps weeks for low permeability soils. Piezometers, sealed in a particular stratum, may be advisable in low permeability soils or where there may be interference from a perched water table.

Reports

The report has been prepared by qualified personnel, is based on the information obtained from field and laboratory testing, and has been undertaken to current engineering standards of interpretation and analysis. Where the report has been prepared for a specific design proposal, the information and interpretation may not be relevant if the design proposal is changed. If this happens, DP will be pleased to review the report and the sufficiency of the investigation work.

Every care is taken with the report as it relates to interpretation of subsurface conditions, discussion of geotechnical and environmental aspects, and recommendations or suggestions for design and construction. However, DP cannot always anticipate or assume responsibility for:

- Unexpected variations in ground conditions. The potential for this will depend partly on borehole or pit spacing and sampling frequency;
- Changes in policy or interpretations of policy by statutory authorities; or
- The actions of contractors responding to commercial pressures.

If these occur, DP will be pleased to assist with investigations or advice to resolve the matter.

About this Report

Site Anomalies

In the event that conditions encountered on site during construction appear to vary from those which were expected from the information contained in the report, DP requests that it be immediately notified. Most problems are much more readily resolved when conditions are exposed rather than at some later stage, well after the event.

Information for Contractual Purposes

Where information obtained from this report is provided for tendering purposes, it is recommended that all information, including the written report and discussion, be made available. In circumstances where the discussion or comments section is not relevant to the contractual situation, it may be appropriate to prepare a specially edited document. DP would be pleased to assist in this regard and/or to make additional report copies available for contract purposes at a nominal charge.

Site Inspection

The company will always be pleased to provide engineering inspection services for geotechnical and environmental aspects of work to which this report is related. This could range from a site visit to confirm that conditions exposed are as expected, to full time engineering presence on site.

Ref: BMY/LF 300001(2)

21st January 2022

Frasers Property Limited
Level 3, Building C, 1 Homebush Bay Drive
RHODES NSW 2138

Attention: Chris Koukoutaris

Dear Chris,

IVANHOE ESTATE STAGE 1B – CIVIL DESIGN STATEMENT

We hereby certify that the civil design depicted on the drawings prepared by ADW Johnson reference 300001(2)-ENG-001-902 revision 1, complies with all conditions of consent SSD 8903 and is generally in accordance with Council's DCP 2014 Part 4.5 Macquarie Park Corridor, Part 8.5 Public civil Works, Part 8.2 Stormwater Management and the Public Domain Technical Manual Section 6 – Macquarie Park Corridor.

Should you have any queries, please do not hesitate to contact the undersigned.

Yours faithfully,

Nathan Delaney
Senior Civil Engineer
MIEAust CPENG NER
ADW Johnson Pty Ltd
Central Coast

ADW JOHNSON PTY LIMITED
ABN 62 129 445 398

Central Coast
5 Pioneer Avenue, Tuggerah NSW 2259
PO Box 3717, Tuggerah NSW 2259
Ph. 02 4305 4300
Fax. 02 4305 4399
Video. 02 43054374
Email. coast@adwjohnson.com.au

Hunter Region
7/335 Hillsborough Road, Warners Bay NSW 2282
Ph. 02 4978 5100
Fax. 02 4978 5199
Video. 02 4954 3948
Email. hunter@adwjohnson.com.au

www.adwiohnson.com.au

LEVEL 2
PIER 8/9, 23 HICKSON ROAD
SYDNEY NSW AUSTRALIA 2000
+61 2 9101 2000

AUSTRALIA / ASIA /
UNITED KINGDOM / UNITED STATES

HASSELL LIMITED
ABN 24 007 711 435

NOMINATED ARCHITECTS NSW:
TONY GRIST 5350
GLENN SCOTT 6842
ROSS DE LA MOTTE 7398

24 January 2022

Mr Chris Koukoutaris
Senior Development Manager
Frasers Property Australia
Level 2, 1C Homebush Bay Drive
Rhodes NSW 2138
Australia

Dear Chris,

IVANHOE ESTATE – STAGE 1B PUBLIC DOMAIN LANDSCAPE WORKS LANDSCAPE ARCHITECTURAL STATEMENT

Hassell hereby confirm that the landscape architectural 'For Tender' documentation for the Stage 1B Public Domain scope of works at Ivanhoe Estate are consistent with the below conditions of consent.

CONDITIONS

B30 – Tree Planting

A minimum of 381 new trees are planted compromising quantities as noted in B30 a) b) c).

Stage 1 Public Domain landscape works provides trees in compliance with quanitites and sizes listed in this clause. Stage 1A contributes to a portion of these species, the balance shall be delivered in future stages of the project.

B31- Street Tree Plan

A Street Tree Plan is to be prepared by a certified Landscape Architect in accordance with Council's relevant Technical Manual. The Plan must show all services and planting detail in accordance with Council's minimum requirements. Details demonstrating compliance with this requirement are to be submitted to the Certifier prior to the issuing of Subdivision Works Certificate.

Hassell Subdivision Works Certificate documentation incorporate the street tree planting layout and accompanying details, along with the location of street light poles and stormwater services (with more detailed underground services detail information available on ADWJ documentation). Please refer to the following Hassell documentation:

- HSL-S1B_0001 – 5401 Ivanhoe Midtown For Tender Documentation

B32 - Schedule of Materials

Prior to the commencement of works for each building, a list of the final schedule of materials shall be submitted to the Planning Secretary. The Applicant shall also submit a copy of the schedule of materials to the Certifier with the application for the relevant Crown Building Works Certificate for each building.

Hassell tender documentation incorporate the landscape architectural materials schedule. Please refer to the following Hassell documentation:

- HSL-S1B_6001 Ivanhoe Midtown Materials & Finishes Scheudle

B82 – Bicycle parking

The layout, design and security of bicycle facilities either on-street or off-street must comply with the minimum requirements of Australian Standards AS 2890.3 – 2015. Details demonstrating compliance must be submitted to the Certifier prior to the issue of the relevant Crown Building Works Certificate for each building.

All bicycle parking facilities are included in the architectural (Bates Smart) scope, with no on-street bicycle parking facilities being provided in the public domain until future project phases when public domain open space is delivered. Please refer to the architect for certification of this clause.

D47 – Bus stops & shelters

Prior to the commencement of any bus services utilising Main Street, the Applicant shall provide details of any proposed bus stop and provide illuminated bus shelters to meet Disability Discrimination Act standards. Bus stop and bus shelters shall be provided at no cost to Council.

No public bus stops are provided along Main Street in Stage 1A works. As such this clause is not applicable.

B90 – Public Domain

All public domain areas are subject to the standards requirements of Council's SCP 2014 Part 4.5 Macquarie Park Corridor, and Council's Public Domain Technical Manual Section 6- Macquarie Park Corridor. In the event of any inconsistency, the approved Landscape Plans are to prevail. Details demonstrating compliance must be submitted to the Certifier prior to the issue of the relevant Crown Building Works Certificate for each building of Subdivision Works Certificate.

Hassell Subdivision Works Certificate documentation are consistent with the landscape architectural DA plans (as approved by NSW Planning, Industry & Environment and in accordance with Council's SCP and Public Domain Technical Manual). Please refer to the following Hassell documentation:

- HSL-S1B_0001 – 5401 Ivanhoe Midtown For Tender Documentation
- HSL-S1B_6001 Ivanhoe Midtown Materials & Finishes Scheudle
- HSL-S1B_6003 Landscape Specification

D45 – Design of Public Domain and Public Infrastructure Works

Details confirming all public domain works have been designed in accordance with Council's DCP 2014 Part 4.5 Macquarie Park Corridor and Public Domain Technical Manual Section 6 – Macquarie Park Corridor, must be provided to Council and Certifier prior to the commencement of each road.

Hassell tender documentation are consistent with the landscape architectural DA plans (as approved by NSW Planning, Industry & Environment and in accordance with Council's SCP and Public Domain Technical Manual). Please refer to the following Hassell documentation:

- HSL-S1B_0001 – 5401 Ivanhoe Midtown For Tender Documentation
- HSL-S1B_6001 Ivanhoe Midtown Materials & Finishes Scheudle
- HSL-S1B_6003 Landscape Specification

I am an experienced, qualified and competent landscape architect.

Name: Georgia Darling
Company: Hassell
Qualifications: BLArch Hons
Address: Level 2 Pier 8/9 23 Hickson Road Sydney Australia 2020
Phone: +61 9101 2000

Yours sincerely

Georgia Darling
Associate

Mobile +61 409 524 575
Email gdarling@hassellstudio.com

cc Andrew Ewington, Hassell

Shrimptons Creek Proposed Bridge Detailed Design Flood and Scour Assessment

Reference: R.A11013.001.02.Shrimptons.Creek.Bridge.FIA.Scour.docx
Date: October 2021
FINAL Report

Document Control Sheet

BMT Commercial Australia Pty Ltd Suite G2, 13-15 Smail Street Ultimo, Sydney, NSW, 2007 Australia PO Box 1181, Broadway NSW 2007 Tel: +61 2 8960 7755 Fax: +61 2 8960 7745 ABN 54 010 830 421 www.bmt.org	**Document:**	R.A11013.001.02.Shrimptons.Creek.Bridge.FIA.Scour.docx
	Title:	Shrimptons Creek Proposed Bridge Detailed Design Flood and Scour Assessment
	Project Manager:	Nathan Cheah
	Author:	Nathan Cheah, Blair Filer, Richard Wang
	Client:	Frasers Property Australia
	Client Contact:	Chris Koukoutaris
	Client Reference:	
Synopsis:	**This report documents the flood and scour assessment undertaken to assess the detailed design of the proposed Shrimptons Creek Bridge at Ivanhoe Estate, Macquarie Park.**	

REVISION/CHECKING HISTORY

Revision Number	Date	Checked by		Issued by	
0	14/07/2021	JH		NC	
1	16/07/2021	NC		NC	
2	01/10/2021	NS		NC	

DISTRIBUTION

Destination	Revision										
	0	1	2	3	4	5	6	7	8	9	10
Frasers Property Australia	PDF	PDF	PDF								
BMT File	PDF	PDF	PDF								
BMT Library	PDF	PDF	PDF								

Copyright and non-disclosure notice
The contents and layout of this report are subject to copyright owned by BMT Commercial Australia Pty Ltd (BMT CA) save to the extent that copyright has been legally assigned by us to another party or is used by BMT CA under licence. To the extent that we own the copyright in this report, it may not be copied or used without our prior written agreement for any purpose other than the purpose indicated in this report.

The methodology (if any) contained in this report is provided to you in confidence and must not be disclosed or copied to third parties without the prior written agreement of BMT CA. Disclosure of that information may constitute an actionable breach of confidence or may otherwise prejudice our commercial interests. Any third party who obtains access to this report by any means will, in any event, be subject to the Third Party Disclaimer set out below.

Third Party Disclaimer
Any disclosure of this report to a third party is subject to this disclaimer. The report was prepared by BMT CA at the instruction of, and for use by, our client named on this Document Control Sheet. It does not in any way constitute advice to any third party who is able to access it by any means. BMT CA excludes to the fullest extent lawfully permitted all liability whatsoever for any loss or damage howsoever arising from reliance on the contents of this report.

Commercial terms
BMT requests the ability to discuss and negotiate in good faith the terms and conditions of the proposed terms of engagement, to facilitate successful project outcomes, to adequately protect both parties and to accord with normal contracting practice for engagements of this type.

Contents

1 Introduction 1
1.1 Background 1
1.2 Report Purpose 1
1.3 Study Area 2
1.4 DA Conditions 2
2 Available Information 4
2.1 Overview 4
2.2 Previous Flood Studies 4
2.2.1 Flood Impact Assessment for Ivanhoe Estate Master Plan (BMT WBM, 2017) 4
2.2.2 Shrimptons Creek Bridge Hydrologic and Hydraulic Assessment (BMT, 2018) 4
2.3 Survey, Road Grading and Proposed Bridge Detailed Design 5
2.4 Geotechnical Reports 5
3 Flood Impact Assessment 6
3.1 Overview 6
3.2 Baseline Flood Conditions 6
3.2.1 Hydrologic Modelling 6
3.2.2 Hydraulic Modelling 7
3.2.3 Results 9
3.3 Proposed Shrimptons Creek Bridge Conditions 11
3.3.1 Hydrologic Modelling 11
3.3.2 Hydraulic Modelling 11
3.3.3 Results 13
3.4 Flood Impact Assessment 14
3.5 Validation of Flood Models 15
4 Scour Assessment 17
4.1 Approach 17
4.2 HEC-RAS Modelling 17
4.3 Scour Protection 19
4.4 Waterway and Riparian Corridor Protection 21
5 Conclusion 23
6 References 25
Appendix A Existing Condition Peak Flood Results A-1

Appendix B Proposed Scenario Peak Flood Results B-1
Appendix C Flood Impact Mapping C-1
Appendix D Blockage Assessment D-1

List of Figures

Figure 1-1 Site Locality 3
Figure 3-1 TUFLOW Model Topography 8
Figure 3-2 HEC-RAS Cross Sections 10
Figure 4-1 Abutments and Piers Scour Depth based on HEC-RAS for the 2% AEP event 19
Figure 4-2 Section View of Riprap at Western Bridge Abutment 20
Figure 4-3 Plan View of Extent of Riprap at Western Bridge Abutment 21
Figure 4-4 Thickness and Extent of Riparian Protection 22

List of Tables

Table 3-1 Baseline Design Flood Levels at the Proposed Bridge Location 9
Table 3-2 Shrimptons Creek Bridge TUFLOW Structure Details 11
Table 3-3 Design Flood Levels Following Construction of the Proposed Bridge 13
Table 3-4 Comparison of TUFLOW and HEC-RAS Design Flood Results Upstream of the Proposed Bridge at the Creek Centreline 16
Table 4-1 Scour Assessment Parameters for the 2% AEP Design Flood Event 17
Table 4-2 Predicted Scour Depths 18
Table 5-1 Upstream Peak Flood Levels for Proposed Shrimptons Creek Bridge 23
Table 5-2 Approved SSD Consent Flood and Scour Requirements 24

List of Charts

Chart 3-1 Plots of Shrimptons Creek Peak Flows Upstream of Proposed Bridge Location 7
Chart 3-2 Determination of Head Loss due to Proposed Bridge Piers (Source: Hydraulics of Bridge Waterways (U.S. Federal Highway Administration, 1978)) 12

1 Introduction

1.1 Background

The Stage 1 State Significant Development Application (SSDA) sought consent for the first stage of detailed works within the Ivanhoe Estate, pursuant to the Ivanhoe Estate Master Plan under Section 4.22 of the Environmental Planning and Assessment Act 1979 (EP&A Act). The Master Plan established the planning and development framework against which the Stage 1 DA has been assessed.

The Stage 1 DA for the redevelopment of the Ivanhoe Estate includes:

- Site preparation works, including removal of trees, demolition, bulk earthworks and excavation;
- Construction of new roads, bridge over Shrimptons Creek and new road connection to Lyonpark Road;
- Construction of two residential apartment buildings (Buildings A1 and C1) with basement car parking:
  - Building A1 with 269 apartments, 233 car parking spaces and a child centre.
  - Building C1 with 471 apartments and 346 car parking spaces.
- Landscaping and public domain works; and
- Amalgamation and subdivision.

The 'Shrimptons Creek Bridge Hydrologic and Hydraulic Assessment' (BMT, 2018) was undertaken to accompany the Stage 1 SSDA.

1.2 Report Purpose

Following approval of the SSDA for Stage 1 of the Ivanhoe Estate redevelopment, design updates to the proposed road bridge spanning Shrimptons Creek from Lyonpark Road to Ivanhoe Estate have been undertaken. Accordingly, it is necessary to update the bridge flood assessment to consider the detailed design.

This report documents the flood and scour assessment undertaken for the current detailed design of the proposed bridge, including:

- collection and review of available data and reports;
- definition of existing and proposed design flood conditions;
- assessment of the potential impacts of the proposed bridge on existing flood behaviour;
- scour assessment for the proposed bridge; and
- responses to the flood-related DA conditions in the consent document (SSD 8903) for the bridge.

1.3 Study Area

The Shrimptons Creek catchment is approximately 6 km^2 in size and consists of a number of minor tributaries draining the local suburbs of Ryde, North Ryde, Marsfield and Macquarie Park. The area surrounding the study site is typified by low to medium density residential development to the south and commercial developments to the north, interspersed with parks and recreational areas.

The topography of the catchment, locality of Ivanhoe Estate and location of the proposed bridge are shown in Figure 1-1. The catchment drains in a north-easterly direction from high ground around Eastwood, Denistone East and Ryde to its discharge point into the Lane Cove River at Macquarie Park. The terrain within the catchment ranges from approximately 100 mAHD to 5 mAHD, with the floodplain and immediate surrounds along Shrimptons Creek typically lying between 40 to 60 mAHD.

1.4 DA Conditions

The DA conditions in the consent document (SSD 8903) relevant to this bridge assessment are listed below:

- Condition B103(d): *maintain the height of the lowest structural element of the bridge at the 1% AEP flood level plus 500 mm freeboard as a minimum.*
- Condition B103(e): *the report shall assess the impact of embankment works on both north-western and north-eastern sides of the bridge on the proposed approach roads and the surrounding properties to ensure any adverse impact from ponding of water (if any) is alleviated.*
- Condition B103(g): *scour protection shall be provided for the bridge piers, abutment and constricted creek waterway and riparian corridor for events up to the 2% AEP. Provision for appropriate plant access to the bridge for maintenance, including for repair and replacement of the scour protection, shall be provided.*

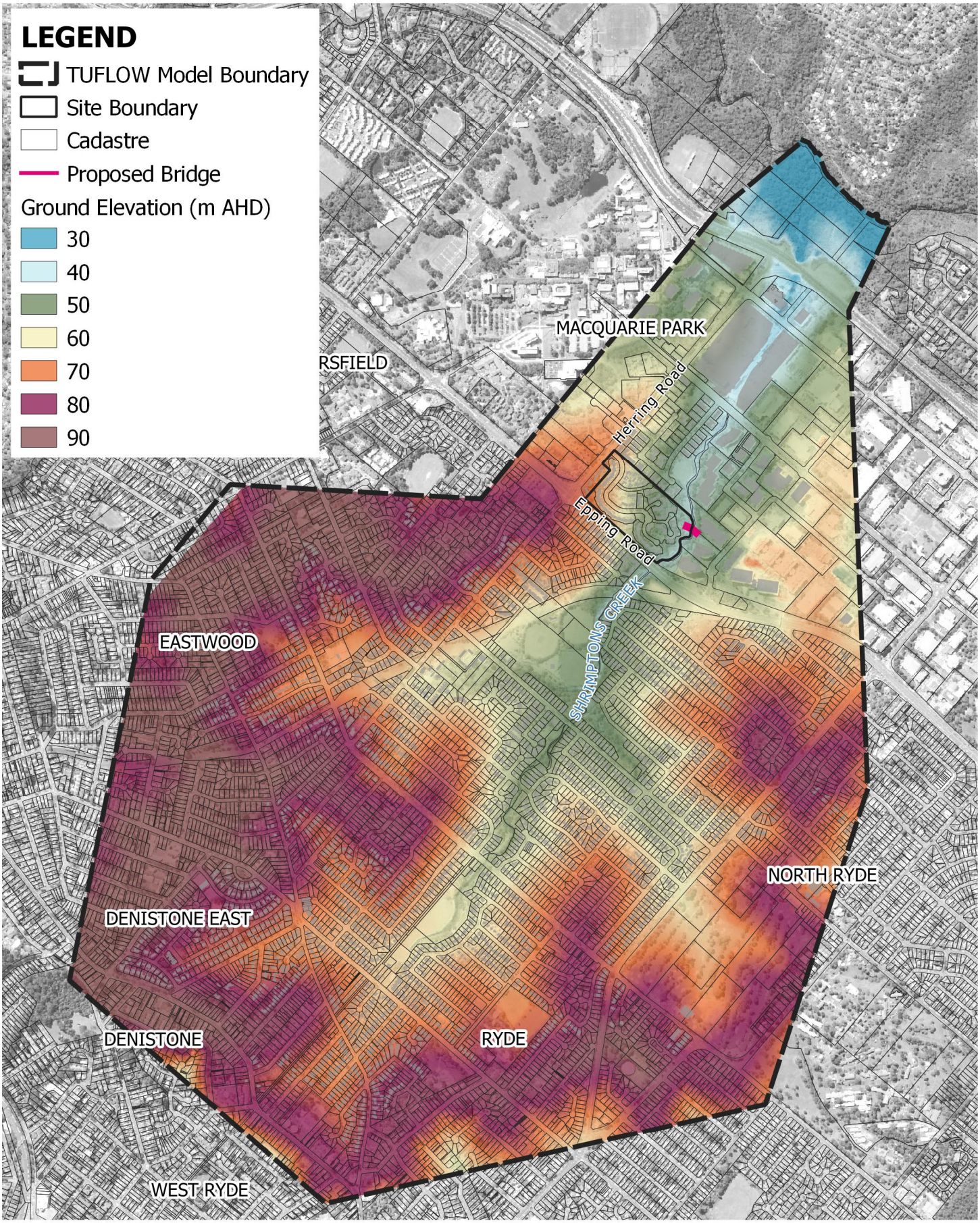

Title:

Site Locality

Figure: **1-1**

Rev: **A**

BMT endeavours to ensure that the information provided in this map is correct at the time of publication. BMT does not warrant, guarantee or make representations regarding the currency and accuracy of information contained in this map.

0 250 500 m

BMT

Filepath: S:\WATER\PROJECTS\A11013_Ivanhoe_Bridge_DD\QGIS\A11013_Report_Figures.qgz

2 Available Information

2.1 Overview

The following sections outline the relevant reports and datasets, including a discussion of their relevance to this flood and scour assessment.

2.2 Previous Flood Studies

2.2.1 Flood Impact Assessment for Ivanhoe Estate Master Plan (BMT WBM, 2017)

In December 2017, BMT WBM completed a flood impact assessment for the proposed Ivanhoe Estate Master Plan. In order to determine the impacts of the proposed Master Plan, this assessment refined the existing two-dimensional (2D) hydraulic TUFLOW model of Shrimptons Creek developed as part of the 'Macquarie Park Floodplain Risk Management Study and Plan' (Bewsher Consulting, 2010). Modifications undertaken by BMT WBM as part of the 2017 flood impact assessment included:

- Incorporation of 2013 LiDAR survey data sourced from NSW Government Land and Property Information (LPI) within Ivanhoe Estate.
- Inclusion of survey provided by ADW Johnson Pty Ltd to update ground elevations, creek bathymetry, and pit and pipe information.
- Use of a 'rainfall-on-grid' modelling approach local to Ivanhoe Estate to replace DRAINS model inflows. This approach applies design rainfall directly onto the individual cells of the TUFLOW model and is particularly useful for studies where model results are desired in areas with small contributing catchments.
- Updating material roughness (i.e. Manning's 'n') zones.

This study adopted temporal patterns and initial and continuing loss guidance in accordance with AR&R1987 (Australian Rainfall and Runoff 1987) to ensure consistency with the 'Macquarie Park Floodplain Risk Management Study and Plan' (Bewsher, 2010).

The results of the flood modelling indicated that the proposed Ivanhoe Estate Master Plan resulted in minimal off-site impacts when considering the 5% and 1% AEP Shrimptons Creek flood events. The magnitude of impacts for the Probable Maximum Flood (PMF) event were predicted to be larger, however an extreme event such as the PMF is typically considered primarily for emergency planning considerations only.

2.2.2 Shrimptons Creek Bridge Hydrologic and Hydraulic Assessment (BMT, 2018)

In October 2018, a hydrologic and hydraulic assessment was undertaken by BMT for the proposed bridge over Shrimptons Creek. This assessment built upon the work undertaken for the 'Ivanhoe Estate Master Plan Flood Impact Assessment' (BMT WBM, 2017) and incorporated the proposed Shrimptons Creek bridge under the post-development scenario within the model from the 2017 assessment.

The results of the flood modelling indicated that increases in peak flood levels during the 5% and 1% AEP and the PMF events would be contained within Shrimptons Creek, between Epping Road and

the proposed bridge location. The abutments to the bridge and the bridge itself were not predicted to be overtopped during any modelled design event.

Velocity changes were predicted to be relatively minor, and did not exceed +0.20m/s in the main section of the creek for the 5% and 1% AEP events. Therefore, the overall risk of erosional damage to Shrimptons Creek during flood events was determined to be similar in both the existing and post-works (i.e. with bridge) conditions.

The outcome of this assessment also indicated that properties upstream and downstream of the proposed bridge are not impacted by the changes in peak flood level or velocity.

2.3 Survey, Road Grading and Proposed Bridge Detailed Design

The following datasets were used or referenced for this assessment to reliably represent the proposed Shrimptons Creek bridge and embankments within the 2D hydraulic model:

- Triangulated ground elevation survey and contours provided by ADW Johnson Pty Ltd (CAD reference: 210505 - 3D Triangles.dwg and 210505 - 3D Contours.dwg);
- Triangulated surface of the Ivanhoe Estate internal roads, eastern and western bridge embankments provided by ADW Johnson Pty Ltd (CAD reference: SUPER FS FOR CREEK MODEL 21 06 25.dwg);
- Proposed Shrimptons Creek bridge drawings - bridge general arrangement and pier details provided by SMEC (Drawing reference: 30013046-105, 30013046-106, 30013046-131, 30013046-132, 30013046-133, Rev 2, dated 20 August 2021); and
- Civil engineering plans of infrastructure works – Stage 1B provided by ADW Johnson Pty Ltd (Drawing reference: 300001 STAGE 2 CC [E].pdf, Rev D, dated 17 August 2021).

2.4 Geotechnical Reports

The following geotechnical reports produced by Douglas Partners in 2017 were reviewed to extract soil information required for the scour assessment:

- Report on Preliminary Geotechnical Investigation of Ivanhoe Estate (Report reference: 2018-01-08_86043.01.R.001.Rev0.Greater.pdf);
- Report on Geotechnical Investigation of Ivanhoe Estate - Stage 1 (Report reference: 2018-01-08_86043.01.R.002.Rev0.Stage1.pdf); and
- Investigation Summary Report (Report reference: 2018-01-08_86043.01.R.003.Rev0.Summary Report Lyon Park Road.pdf).

3 Flood Impact Assessment

3.1 Overview

This section provides the methodology and results of the modelling undertaken to define flood conditions for the existing and proposed scenarios, and the assessment of potential flood impacts resulting from the construction of the proposed Shrimptons Creek bridge. Please note that the TUFLOW model developed for the 'Shrimptons Creek Bridge Hydrologic and Hydraulic Assessment' (BMT, 2018) has been adopted herein, albeit with further refinements based on the current bridge design and latest survey data.

3.2 Baseline Flood Conditions

3.2.1 Hydrologic Modelling

As discussed in Section 2.2.1, the 'Ivanhoe Estate Master Plan Flood Impact Assessment' (BMT WBM, 2017) TUFLOW model utilised the following hydrologic inputs:

- sub-catchment flow hydrographs generated using DRAINS software for all areas outside Ivanhoe Estate;
- a 'rainfall-on-grid' modelling approach local to Ivanhoe Estate to replace DRAINS model inflows.

This approach was maintained for the 'Shrimptons Creek Bridge Hydrologic and Hydraulic Assessment' (BMT, 2018) and has also been used for this assessment. Accordingly, the hydrologic inputs within the TUFLOW model for the 5% AEP, 2% AEP, 1% AEP and PMF events were maintained.

For the purposes of the scour assessment, the 0.05% or 1 in 2,000 AEP event hydrology for the local Ivanhoe Estate catchment was derived using the methodology from the Australian Rainfall and Runoff (ARR) Book VI Estimation of Large to Extreme Floods (Pilgrim, 2001), which utilises rainfall depths for the 1% AEP and the Probable Maximum Precipitation (PMP).

However, as the DRAINS hydrologic model was not available for this assessment, it was not possible to use the DRAINS model to generate 0.05% AEP flows using this methodology. Therefore, for the remainder of the Shrimptons Creek catchment, sub-catchment inflow hydrographs were scaled up to produce the equivalent peak flow at Shrimptons Creek upstream of the proposed bridge location for the 0.05% AEP event, i.e. 118 m^3/s, based on Chart 3-1. This chart is a log-normal probability plot which is generally used in hydrologic data analysis and allows for a good fit of the hydrologic data as shown.

Consistent with previous investigations, a critical storm duration of 120 minutes for events up to the 1% AEP was maintained for this study as well as a 15-minute duration for the PMF event. The 15-minute duration was also found to be critical for the 0.05% AEP event.

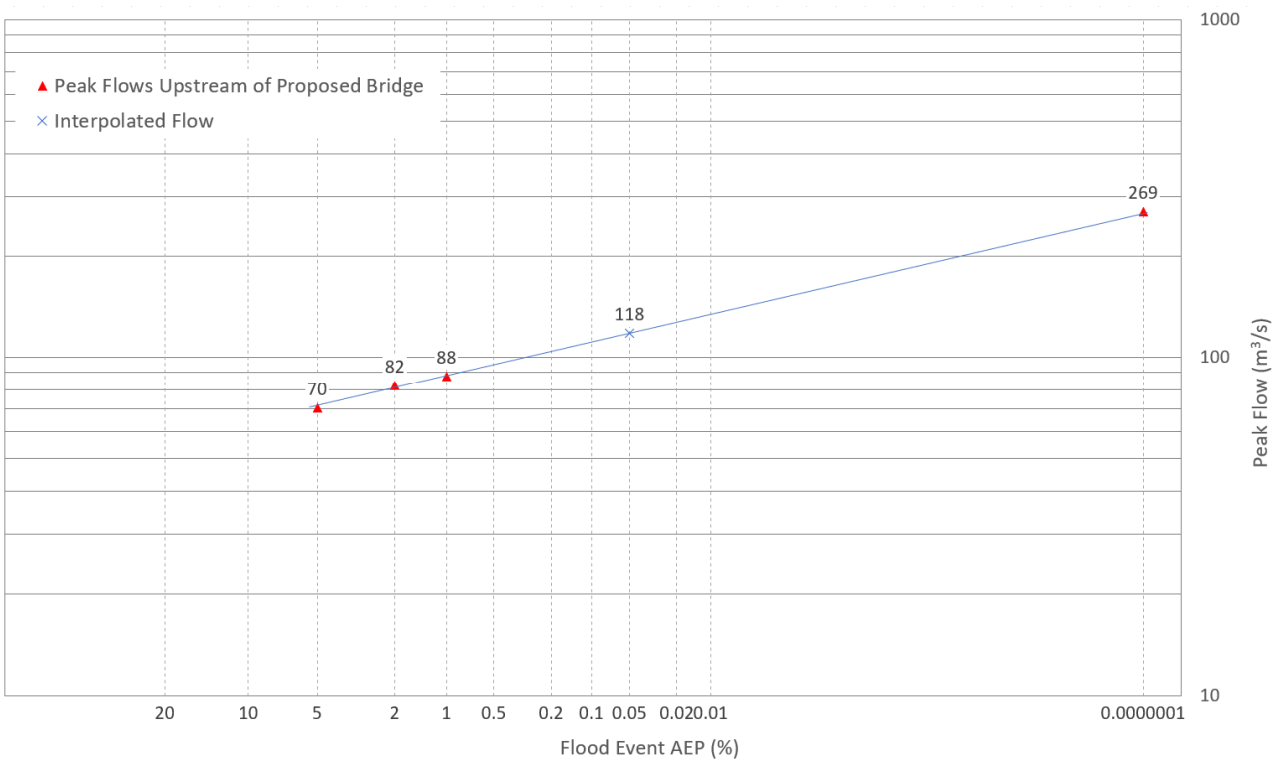

Chart 3-1 Plots of Shrimptons Creek Peak Flows Upstream of Proposed Bridge Location

3.2.2 Hydraulic Modelling

The TUFLOW 2D hydraulic model developed for the 'Shrimptons Creek Bridge Hydrologic and Hydraulic Assessment' (BMT, 2018) removed sections of in-bank one-dimensional (1D) creek cross-sections adjacent to the Ivanhoe Estate to facilitate detailed representation of flow dynamics in the vicinity of the proposed bridge structure in the 2D model domain. This approach has been retained for this assessment.

The in-bank sections of Shrimptons Creek are therefore represented completely in 2D, utilising survey data provided by ADW Johnson Pty Ltd (CAD reference: 210505 – 3D Triangles.dwg and 210505 – 3D Contours.dwg) to define ground elevations. The topography within the TUFLOW model for the existing scenario are shown in Figure 3-1.

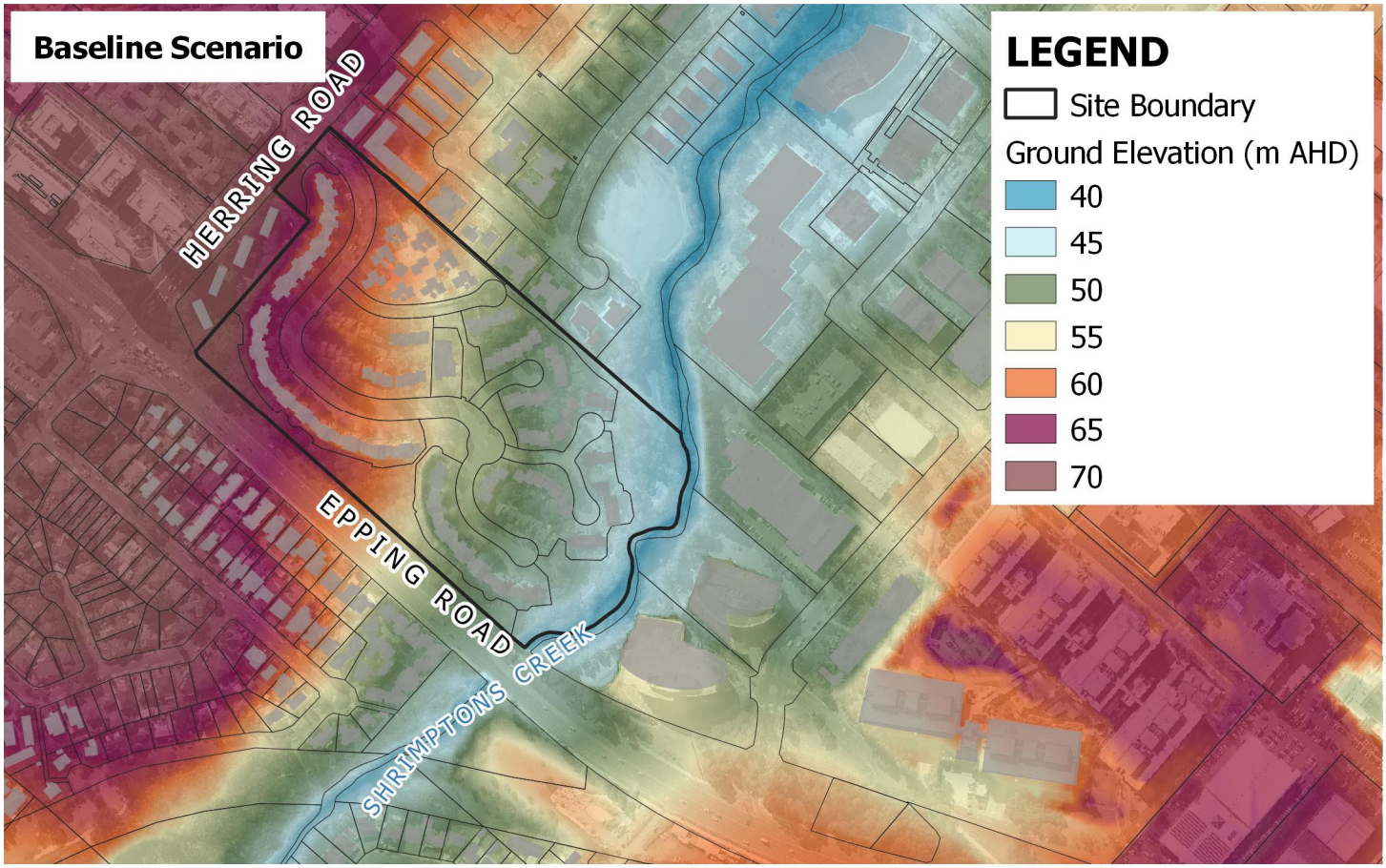

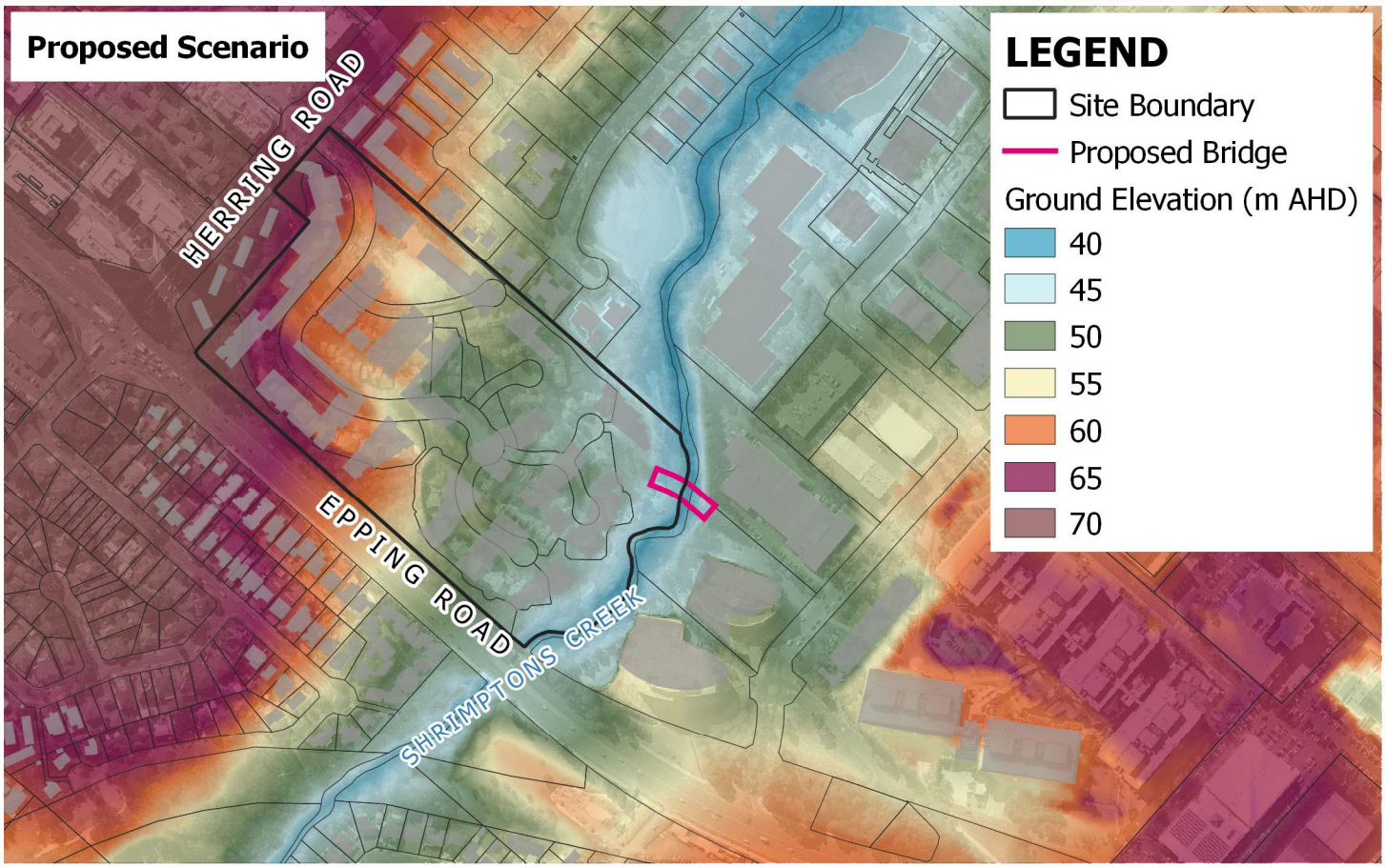

Title:

TUFLOW Model Topography

Figure: **3-1**

Rev: **A**

BMT endeavours to ensure that the information provided in this map is correct at the time of publication. BMT does not warrant, guarantee or make representations regarding the currency and accuracy of information contained in this map.

0 100 200 m

BMT

Filepath: S:\WATER\PROJECTS\A11013_Ivanhoe_Bridge_DD\QGIS\A11013_Report_Figures.qgz

3.2.3 Results

To determine the baseline flood conditions for the proposed Shrimptons Creek bridge assessment, the existing TUFLOW model was simulated for the 5% AEP, 2% AEP, 1% AEP, 0.05% AEP and the PMF events. Both blocked and unblocked conditions for cross-drainage structures within the TUFLOW model, as defined in the 'Macquarie Park Floodplain Risk Management Study and Plan' (Bewsher, 2010), were modelled, however it was subsequently found that there is minimal difference in the flood modelling results between the blockage conditions at the proposed bridge location[1]. Existing peak flood behaviour in the vicinity of the proposed bridge location are presented in Appendix A for both blocked and unblocked conditions. Please note that depths less than 0.1 m are not shown in any flood mapping for this assessment.

Baseline peak flood levels immediately upstream of the proposed bridge location (Chainage 335.2 in Figure 3-2) are summarised in Table 3-1. Due to the hydraulic gradient predicted laterally across the creek at the proposed location of the Shrimptons Creek Bridge by the TUFLOW model, peak flood levels have been presented at the centreline of the creek, as well as minimum and maximum levels across the width of the creek.

Table 3-1 Baseline Design Flood Levels at the Proposed Bridge Location

Design Event	Upstream Peak Flood Level* (mAHD)
5% AEP	44.2 (43.9 – 44.3)
2% AEP	44.4 (44.0 – 44.4)
1% AEP	44.5 (44.2 – 44.7)
0.05% AEP	44.8 (44.5 – 44.9)
PMF	45.8 (45.5 – 45.8)

** Flood level at the creek centre line based on the critical blocked and unblocked conditions (range of minimum and maximum value across the creek width)*

[1] Significant level difference is observed at the Waterloo Road hydraulic structures approximately 0.5 km downstream, but not at the proposed bridge location.

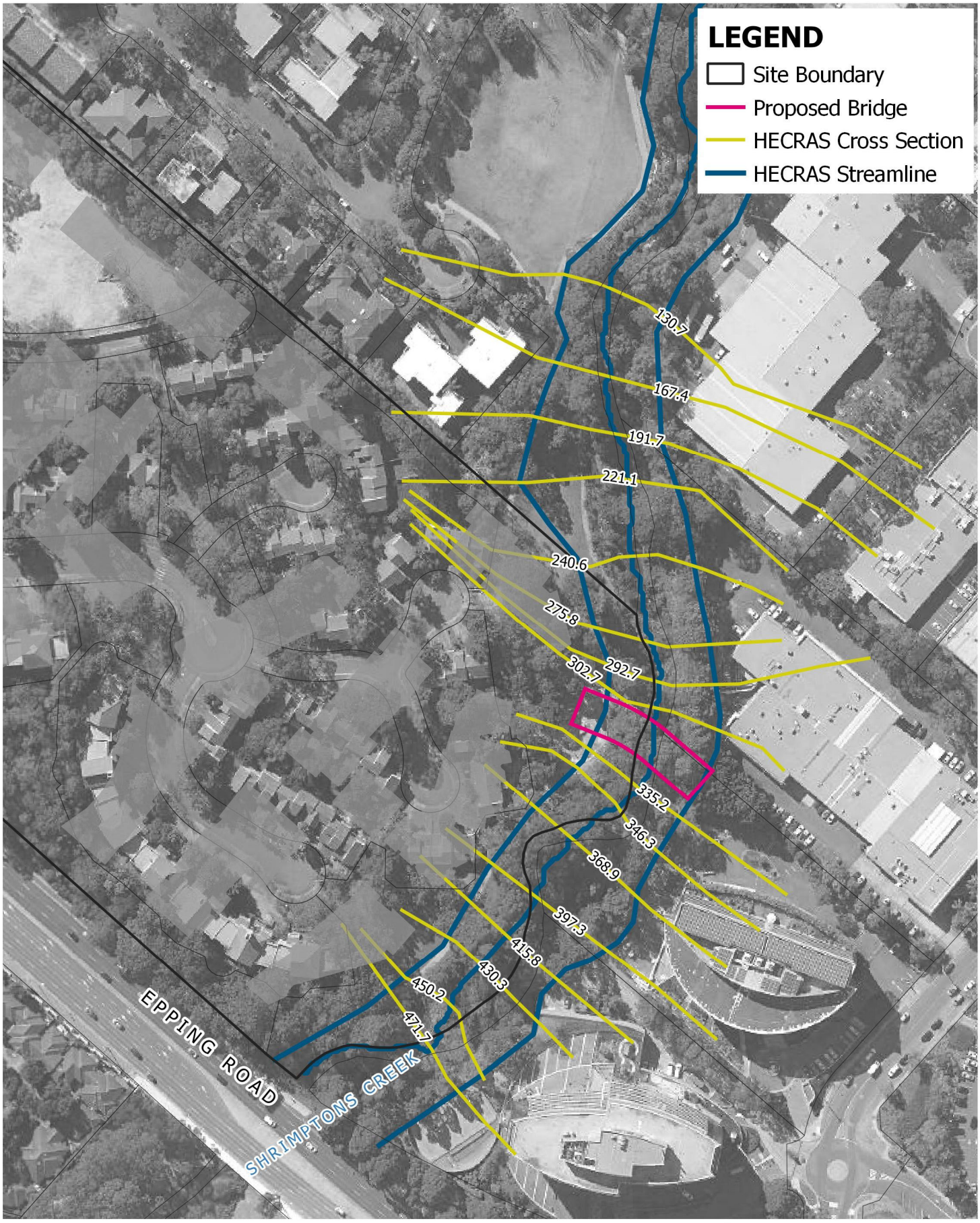

Title:

HEC-RAS Cross Sections

Figure: **3-2**

Rev: **A**

BMT endeavours to ensure that the information provided in this map is correct at the time of publication. BMT does not warrant, guarantee or make representations regarding the currency and accuracy of information contained in this map.

0 25 50 m

BMT

Filepath: S:\WATER\PROJECTS\A11013_Ivanhoe_Bridge_DD\QGIS\A11013_Report_Figures.qgz

3.3 Proposed Shrimptons Creek Bridge Conditions

3.3.1 Hydrologic Modelling

Hydrologic model inputs for the proposed scenario were consistent with those for the baseline scenario (refer Section 3.2.1).

3.3.2 Hydraulic Modelling

The proposed scenario model was updated to include details of the Shrimptons Creek bridge and adjacent embankments provided by SMEC and ADW Johnson Pty Ltd. Specifically, this included the definition of:

(1) Proposed bridge abutments and grading of roads leading to the bridge; and

(2) Proposed bridge deck and piers.

Proposed bridge abutments and road surface elevations were defined based on the design TIN (Triangulated Irregular Network) (CAD reference: SUPER FS FOR CREEK MODEL 21 06 25.dwg), which raised ground elevations within the TUFLOW model to the level of the proposed road deck. The topography for the proposed scenario within the Shrimptons Creek TUFLOW model is presented in Figure 3-1.

The proposed bridge deck and piers were modelled in TUFLOW using a layered flow constriction shape. This approach involved:

- Representation of the waterway area under the bridge based on the topographic definition of the creek bed, banks and bridge abutments in the Digital Elevation Model (DEM) of the hydraulic model.
- Multi-layered definition of hydraulic losses associated with the bridge structure in the 2D domain to account for the bridge piers and deck based on the proposed bridge drawings (Drawing reference: 30013046-105, 30013046-106, 30013046-131, 30013046-132, 30013046-133, Rev 2, dated 20 August 2021). Values were specified for each layer to represent bridge obvert elevation, waterway blockage by the bridge piers and hydraulic losses. A summary of the modelled parameters are provided in Table 3-2.

Table 3-2 Shrimptons Creek Bridge TUFLOW Structure Details

Layer	Obvert (mAHD)	Blockage (%)	Form Loss
L1 (Waterway)	45.563 – 46.071	0 (> 0.5% AEP) 15 (< 0.5% AEP)	0.45
L2 (Bridge Deck)	46.729 – 47.237	100	1.56
L3 (Above Deck)^	> 47.237	0	0

^ Subsequent flood modelling results indicate that the highest creek flood levels (i.e. PMF levels) only reach the bridge deck level and do not overtop the proposed bridge.

The blockage assessment approach recommended by ARR2019 has been used herein for establishing potential debris blockage for the proposed bridge structure (refer Appendix D). The form loss resulting from the bridge piers was determined using the 'Hydraulics of Bridge Waterways' (U.S. Federal Highway Administration, 1978), with consideration of the skew of bridge piers in the direction of Shrimptons Creek flows. The "V-shaped" piers proposed were conservatively considered as two separate piers in the determination of the head loss, as illustrated in Chart 3-2.

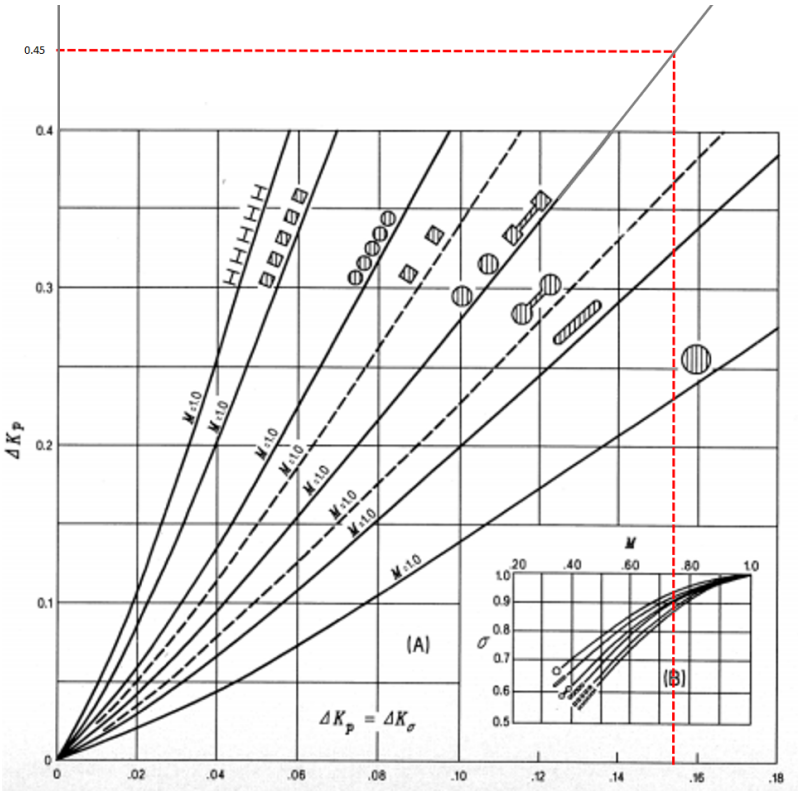

Chart 3-2 Determination of Head Loss due to Proposed Bridge Piers (Source: Hydraulics of Bridge Waterways (U.S. Federal Highway Administration, 1978))

3.3.3 Results

The TUFLOW model for the proposed bridge scenario was simulated for a range of design flood events, including the 5% AEP, 2% AEP, 1% AEP, 0.05% AEP and the PMF. Predicted peak flood behaviour is mapped in Appendix B for both blocked and unblocked conditions. It was also found that there is minimal difference in the flood modelling results between the blockage conditions at the proposed bridge location.

Peak flood levels immediately upstream of the proposed Shrimptons Creek bridge (Chainage 335.2 in Figure 3-2) are listed in Table 3-3. Due to the hydraulic gradient predicted laterally across the creek at the proposed location of the Shrimptons Creek Bridge by the TUFLOW model, peak flood levels have been presented at the centreline of the creek, as well as minimum and maximum levels across the width of the creek.

Table 3-3 Design Flood Levels Following Construction of the Proposed Bridge

Design Event	Upstream Peak Flood Level* (mAHD)
5% AEP	44.2 (44.0 – 44.5)
2% AEP	44.4 (44.1 – 44.5)
1% AEP	44.5 (44.2 – 44.7)
0.05% AEP	44.9 (44.7 – 45.2)
PMF	46.1 (46.0 – 46.1)

** Flood level at the creek centre line based on the critical blocked and unblocked conditions (range of minimum and maximum value across the creek width)*

The following key design levels are noted for the proposed Shrimptons Creek bridge:

- Soffit of the deck is elevated at 45.563 mAHD at the western (and lower) abutment and 46.071 mAHD at the eastern (and higher) abutment;
- The top of bridge deck level is 46.729 mAHD at the western abutment and 47.237 mAHD at the eastern abutment.

With reference to Table 3-3, the bridge deck will not be overtopped, providing flood immunity in all modelled design events. The proposed bridge soffit achieves a clearance above the 1% AEP creek flood levels plus 0.5 m freeboard, hence satisfying Condition B103(d) in the DA consent document (SSD 8903).

3.4 Flood Impact Assessment

The proposed bridge design has been considered in terms of potential adverse impacts on existing (baseline) flood behaviour. Peak flood level impact maps and peak velocity impact maps for the 5% AEP, 2% AEP, 1% AEP and PMF design floods are presented in Appendix C for both blocked and unblocked conditions. This mapping was prepared by subtracting peak existing water levels/velocities from peak proposed water levels/velocities and indicate the magnitude and location of changes associated with the proposed bridge.

The proposed new approach road embankments/abutments encroach further into the Shrimptons Creek floodway when compared to existing conditions, especially on the western bank. Additionally, the proposed roadway and bridge approaches are raised above the floodplain. The proposed bridge will result in a localised concentration of flow within the reduced cross-sectional area of the Shrimptons Creek waterway resulting from the bridge abutments and piers. The resultant change in peak flood level and velocity mapping in Appendix C shows that the proposed bridge will result in modifications to predicted flood conditions in the vicinity of the proposed bridge location, as follows:

- During the 1% AEP flood:
  - Localised increases in peak flood levels are predicted upstream of the proposed bridge.
  - The maximum peak flood level increase is in the order of 0.10 m and is predicted within the creek channel adjacent to the western abutment.
  - Adverse flood impacts are shown to be primarily contained within the Shrimptons Creek corridor, not propagating upstream of the Epping Road underpass. It should be noted that the existing buildings situated south-east of Shrimptons Creek are either outside the 1% AEP flood extent or significantly elevated above peak 1% AEP flood levels.
  - The scale of predicted flood level impacts is primarily due to the western bridge embankment/abutment obstructing conveyance across the floodplain, with minor influences due to the modelled bridge piers.
  - Changes to the peak flow velocities are generally localised to the proposed bridge location (for all events up to the 1% AEP design flood).
  - An increase greater than 0.2 m/s is predicted on the western bank adjacent to the bridge abutment and is contained to within 30 m of the proposed bridge. Beyond that, there is minimal change to the existing flood regime due to the construction of the proposed bridge that would cause significant erosional damage to Shrimptons Creek during flood events.
  - Minimal impacts are predicted on adjoining private properties as a result of the redistribution of flow associated with the modified landform and new bridge structure. This is reflected in the neighbouring pockets of newly flooded (i.e. yellow shaded areas of “was dry now wet” in impact mapping in Appendix C) and no-longer flooded areas (i.e. green shaded areas of “was wet now dry” in impact mapping in Appendix C).

- During the PMF:
  - Flood impacts are predicted to be more extensive. It is important to note, however, that this is an extremely rare event with an AEP of 1 in 10,000,000 according to 'The Estimation of Probable Maximum Precipitation in Australia: Generalised Short-Duration Method' (Bureau of Meteorology, 2003) and is generally used for emergency evacuation planning purposes. Furthermore, under existing conditions Shrimptons Creek and its adjacent floodplain are already subject to significant inundation depths during the PMF.
  - Maximum peak flood level increases in the order of 0.30 – 0.40 m are predicted upstream of the proposed bridge.
  - Reductions in peak flood levels are predicted up to 130 m downstream of the proposed Shrimptons Creek Bridge structure.
  - The significant impacts predicted during this extreme event are due to PMF flows significantly exceeding the capacity of the bridge opening but not overtopping the bridge deck. As a result, Shrimptons Creek flows are attenuated upstream of the bridge structure and floodwaters back up along the creek channel.
  - The velocity across the creek is predicted to increase by more than 0.5 m/s in the proximity of the bridge abutments, however velocity increases greater than 0.2 m/s do not extend beyond 110 m downstream of the proposed bridge.

Overall, although there are impacts on flood behaviour predicted by the modelling results, they are largely contained within the Shrimptons Creek corridor. Adverse impacts outside of creek corridor are predicted to occur across small areas of the floodplain, are relatively minor and do not impact on existing buildings within neighbouring properties at the peak of the 1% AEP flood. Therefore, properties upstream and downstream of the proposed bridge are not considered to be adversely impacted by the changes in peak flood level or velocity up to and including the 1% AEP design flood event, hence meeting Condition B103(e) in the DA consent document (SSD 8903). It should also be noted that the impact outcomes predicted herein for the current detailed design of the bridge are similar to those for the previous bridge design, as documented in the 'Shrimptons Creek Bridge Hydrologic and Hydraulic Assessment' (BMT, 2018) and approved as part of the Stage 1 SSDA.

3.5 Validation of Flood Models

A 1D HEC-RAS hydraulic model was developed for Shrimptons Creek to provide validation of the TUFLOW flood modelling results (particularly predicted afflux at the proposed bridge) and to facilitate the subsequent scour assessment. The extent of the HEC-RAS model and the layout of the 1D cross sections are presented in Figure 3-2.

Peak flows for Shrimptons Creek were extracted from the TUFLOW flood model and applied as steady-state inflows to the HEC-RAS model (i.e. flows remain constant with respect to time). The adopted hydraulic roughness (i.e. Manning's 'n' values) of the creek and adjacent banks within the HEC-RAS model were consistent with the values used in the TUFLOW model. A normal-depth tailwater condition with a slope of 0.2% was adopted within the HEC-RAS model and was found to produce similar flood levels and impacts when compared to those generated by the TUFLOW model (refer Table 3-4). The difference between the results of the hydraulic models was generally less than

0.01 m for all modelled design events. This is considered to represent a good correlation between the results of these two hydraulic models and provides confidence in the reliability of the TUFLOW model for simulating flood conditions within the Shrimptons Creek corridor and assessing the predicted impacts associated with the proposed bridge, as well as demonstrating the suitability of the HEC-RAS model for the purposes of scour assessment.

However, it is important to note the following limitations of the HEC-RAS modelling:

- The 1D HEC-RAS model could not simulate the lateral hydraulic gradient across Shrimptons Creek that was observed from the 2D TUFLOW model results (due to its 1D nature), hence the comparison in Table 3-4 is undertaken only at the creek centreline;
- Steady state flow conditions were modelled in HEC-RAS while unsteady flow conditions (i.e. flows varying over time) were modelled in TUFLOW; and
- The comparison of predicted flood levels was predominantly focussed on the cross-section immediately upstream of the proposed bridge where assessment of the bridge clearance and scour depths are undertaken.

Table 3-4 Comparison of TUFLOW and HEC-RAS Design Flood Results Upstream of the Proposed Bridge at the Creek Centreline

Design Events (AEP)	TUFLOW			HEC-RAS		
	Baseline Conditions Flood Levels (mAHD)	Proposed Conditions Flood Levels (mAHD)	Flood Level Impacts (m)	Baseline Conditions Flood Levels (mAHD)	Proposed Conditions Flood Levels (mAHD)	Flood Level Impacts (m)
5%	44.13	44.19	+0.06	44.12	44.18	+0.06
2%	44.30	44.36	+0.06	44.31	44.36	+0.05
1%	44.41	44.47	+0.06	44.42	44.48	+0.06
0.05%	44.76	44.87	+0.12#	44.80	44.85	+0.05

 # Debris blockage of 15% has been incorporated for the proposed bridge in the TUFLOW model

4 Scour Assessment

4.1 Approach

Estimation of the proposed bridge scour depths was completed using the HEC-RAS software and based on industry standard methods detailed in the Austroads' 'Guide to Bridge Technology Part 8, Chapter 5: Bridge Scour' (2018) and TMR's 'Bridge Scour Manual' (2019), which is a supplement to the Austroads' guidelines. The scour assessment is detailed in the following sections. Scour protection is provided for the proposed bridge for events up to the 2% AEP as per Condition B103(g) in the DA consent document (SSD 8903).

4.2 HEC-RAS Modelling

A 1D steady-state HEC-RAS model was developed to calculate scour depth at the proposed bridge, as discussed in Section 3.5. The particle size distribution test results documented in the geotechnical investigation report by Douglas Partners (2017) were relied upon, which reported a soil d_{50} of 0.025 - 0.1 m and d_{85} of 0.3 - 0.35 m for a borehole sample depth of around 0.9 m. As the proposed bridge includes abutments and piers, the scour depths were determined at those locations for the modelled design flood events.

For the scour assessment, the hydraulic parameters were derived from the HEC-RAS model and supplemented by the results from the TUFLOW model (e.g. flow velocities surrounding the proposed bridge abutments). HEC-RAS cross-sections were derived from the design TIN supplied by ADW Johnson Pty Ltd (i.e. SUPER FS FOR CREEK MODEL 21 06 25.dwg), which corresponds to the data used for the creek channel elevation definition within the TUFLOW model. The scour assessment parameters are provided in Table 4-1.

Table 4-1 Scour Assessment Parameters for the 2% AEP Design Flood Event

Scour Location	Parameter	Value
Western Abutment	Velocity	1.2 m/s
	Length	14 m
	K1	Vertical Abutment
	Skew angle	90 degrees
Piers	Velocity	2.0 m/s
	Width	1.2 m (1.8 m skewed for each pier in the direction of the flows)
	Length	3.6 m (accounting for two piers)
	Skew angle	9.5 degrees
	Shape	Group of Cylinders
	K3	Clear Water Scour
Eastern Abutment	Velocity	1.5m/s
All Locations	D_{50}	0.025 – 0.1 m
	D_{95}	0.3 - 0.35 m

The velocity parameters were adjusted based on the velocity from the TUFLOW model at the piers and the abutments. Both 1.2 m diameter columns which are part of the bridge piers (the columns form a V-shape from the pile cap) are assumed to block the flow path under the proposed bridge. The width of the piers accounts for the skew angle in the direction of the creek flows.

Based on the previous stated parameters, the maximum computed abutment scour depth was found to be 2.8 m for the western abutment and the pier scour depth was found to be 3.2 m for the 2% AEP design flood event. The abutment and pier scour depths computed need to be taken into account in the design of the abutment and pier foundations. The model results also indicates the presence of contraction scour depths of 0.2 m on the western creek bank affecting the western abutment, piers and main creek, and 0.6 m on the eastern creek bank affecting mainly the eastern abutment. It should be noted that there is significantly less scour for the eastern abutment compared to the western abutment since the ground elevations at the location are higher and creek flood levels do not encroach onto the eastern abutment up to and including the 2% AEP event. The predicted scour depth results for the 2% AEP, 1% AEP and 0.05% AEP design flood events are provided in Table 4-2.

Pressure scour has not been assessed herein as the proposed bridge deck would not be submerged up to and including the 0.05% AEP design flood event.

Table 4-2 Predicted Scour Depths

Scour Location	AEP	Total Scour Depth (m)
Western Abutment	2%	2.8
	1%	3.3
	0.05%	5.0
Piers	2%	3.2
	1%	3.2
	0.05%	3.5
Eastern Abutment	2%	N/A
	1%	N/A
	0.05%	N/A

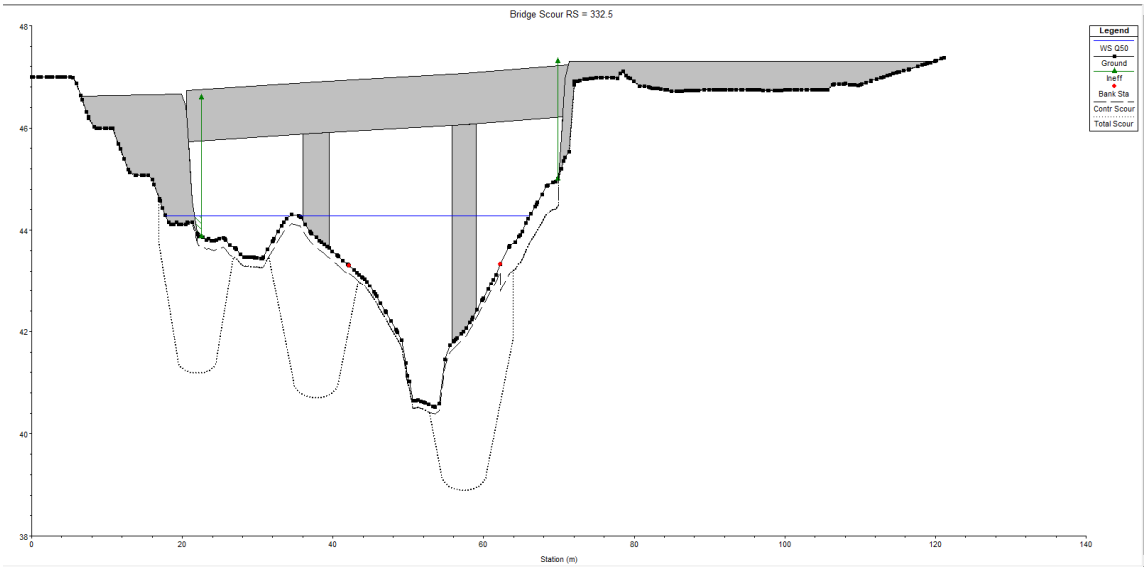

Figure 4-1 Abutments and Piers Scour Depth based on HEC-RAS for the 2% AEP event

4.3 Scour Protection

There are various available methods for providing scour protection under a bridge. Some of these include loose riprap, grouted riprap, concrete pavement, reno mattress and gabion. In this case, loose riprap has been recommended as it is environmentally friendly, easy to construct and provides sufficient protection.

Scour protection can be designed based on either the velocity or bed sheer stress methods, although it is more typically undertaken using velocity in Australia. Thus, the scour protection design has been based on the average velocity estimates (for the 2% AEP event) derived from the hydraulic modelling.

The required scour protection type, size and depth were determined based on the Austroads' 'Guide to Bridge Technology Part 8, Chapter 5: Bridge Scour' (2018) and TMR's 'Bridge Scour Manual' (2019). The scour protection (riprap) dimensions (D_{50} and D_{min}) were calculated based on the average velocity for the upstream cross-section. Given the conservative abutment scour depth adopted, the riprap thickness (depth) was calculated based on the minimum recommended depth of 1.7 times D_{50} in accordance with the 'Bridge Scour Manual' (TMR, 2019).

The proposed dimensions of the abutment scour protection are:

- D_{50}: 350 mm.
- D_{min}: 240 mm.
- Depth: 600 mm.
- Minimum apron extent: 7.62m (25 feet) extending into the floodplain.

The finished riprap surface elevation should be flush with the existing ground surface and placed at a slope no steeper than 1V (vertical): 2H (horizontal). The extent of the of the scour protection should be placed around the embankment as shown in Figure 4-2 and Figure 4-3. The minimum recommended scour protection depth is 0.6m below the existing surface. Placement of the riprap

and/or back fill should not alter the cross-sectional area of the creek in order to maintain the flow conveyance capacity.

Both the Austroads (2018) and TMR (2019) scour guidelines do not recommend scour protection for piers of new bridges. The proposed bridge design shall take into account the estimated maximum scour depth at piers, to make sure that the structural integrity of the bridge will be maintained for the life of the structure under the Ultimate Limit States (1 in 2,000 AEP event) total scour depth.

It is also recommended that the pile caps are placed at a depth of 0.2 - 0.5 m below the surface based on the Austroads (2018) guidelines.

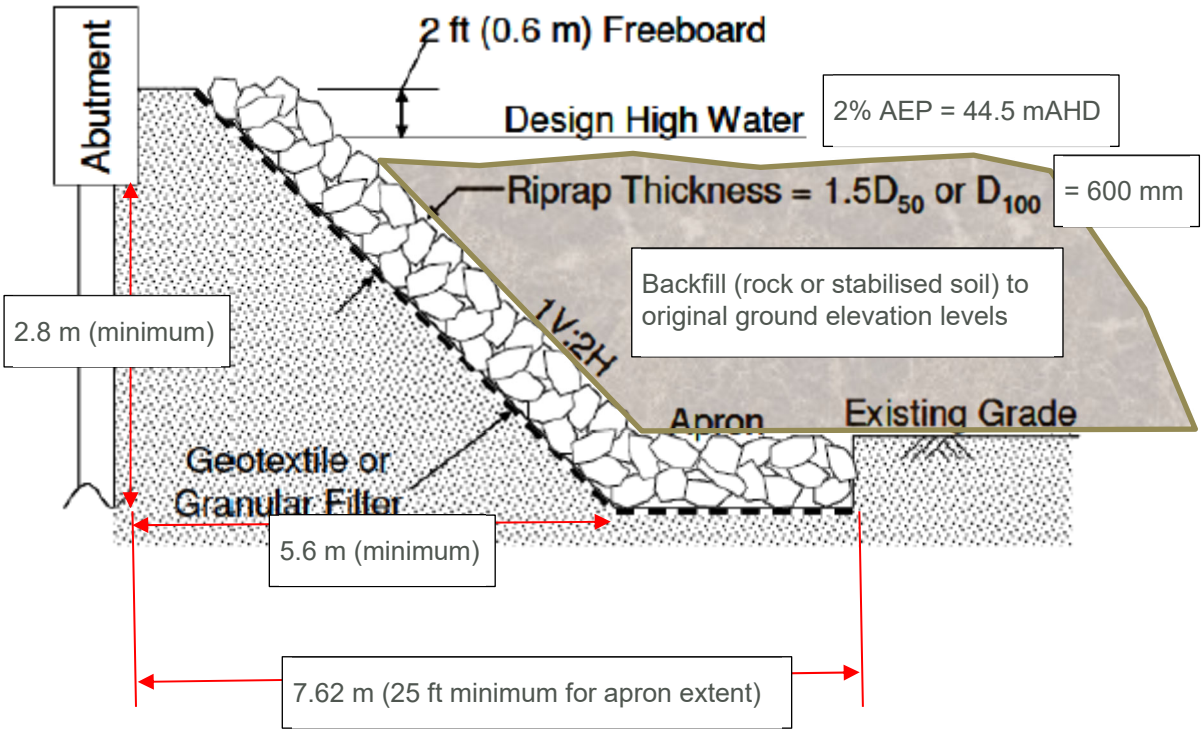

Figure 4-2 Section View of Riprap at Western Bridge Abutment

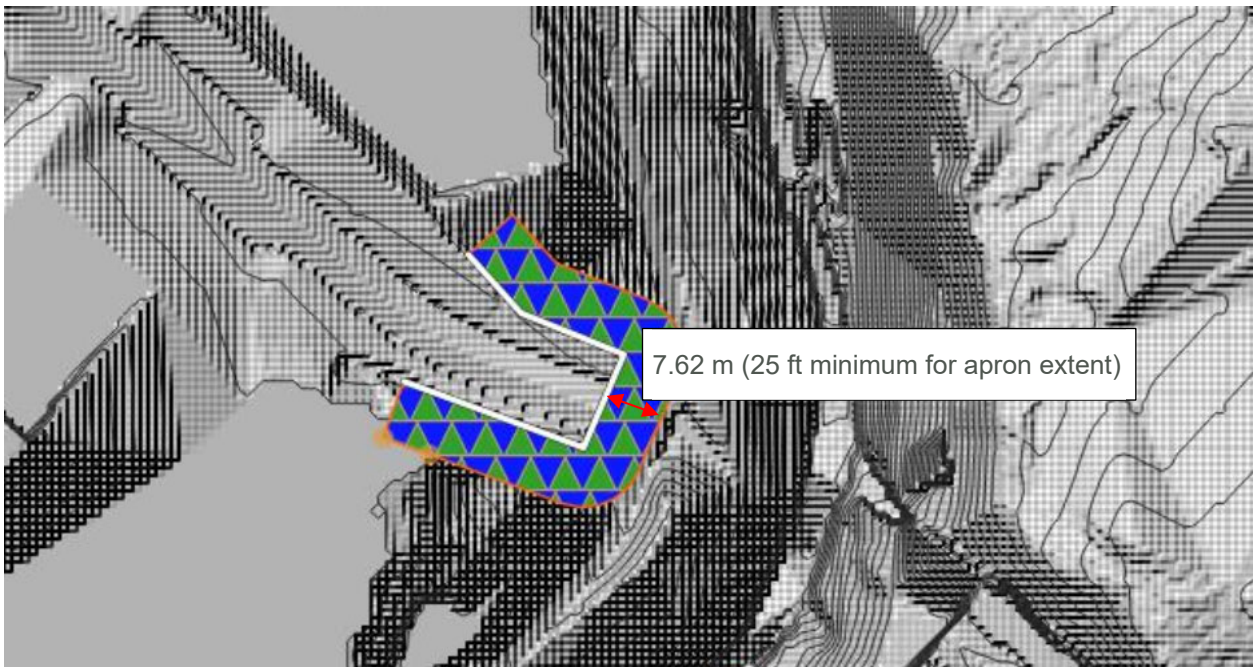

Figure 4-3 Plan View of Extent of Riprap at Western Bridge Abutment

4.4 Waterway and Riparian Corridor Protection

In addition to the abutment scour protection, riprap protection is also proposed on the floodplain where there is significant change in bed shear stress in the 2% AEP event (increase above 10 N/m^2), as shown in Figure 4-4. Using the equation from 'Rock Sizing for Bank Stabilisation' (Catchments & Creeks Pty Ltd, 2014), for angular (fractured rock) with specific gravity of 2.6, and bank slope of 1:2 (V:H) or less:

- $D_{50} = 0.04\ V^2$

With an approaching velocity at the creek bed reaching 2.2 m/s in the 2% AEP event for the areas indicated in Figure 4-4, D_{50} is approximately 0.2 m. A thickness of 0.4 m has been adopted for the western creek bank and the creek bed and 0.6 m for the eastern creek bank, which is at least twice D_{50} and also sufficient to cover the contraction scour depths reported in Section 4.2.

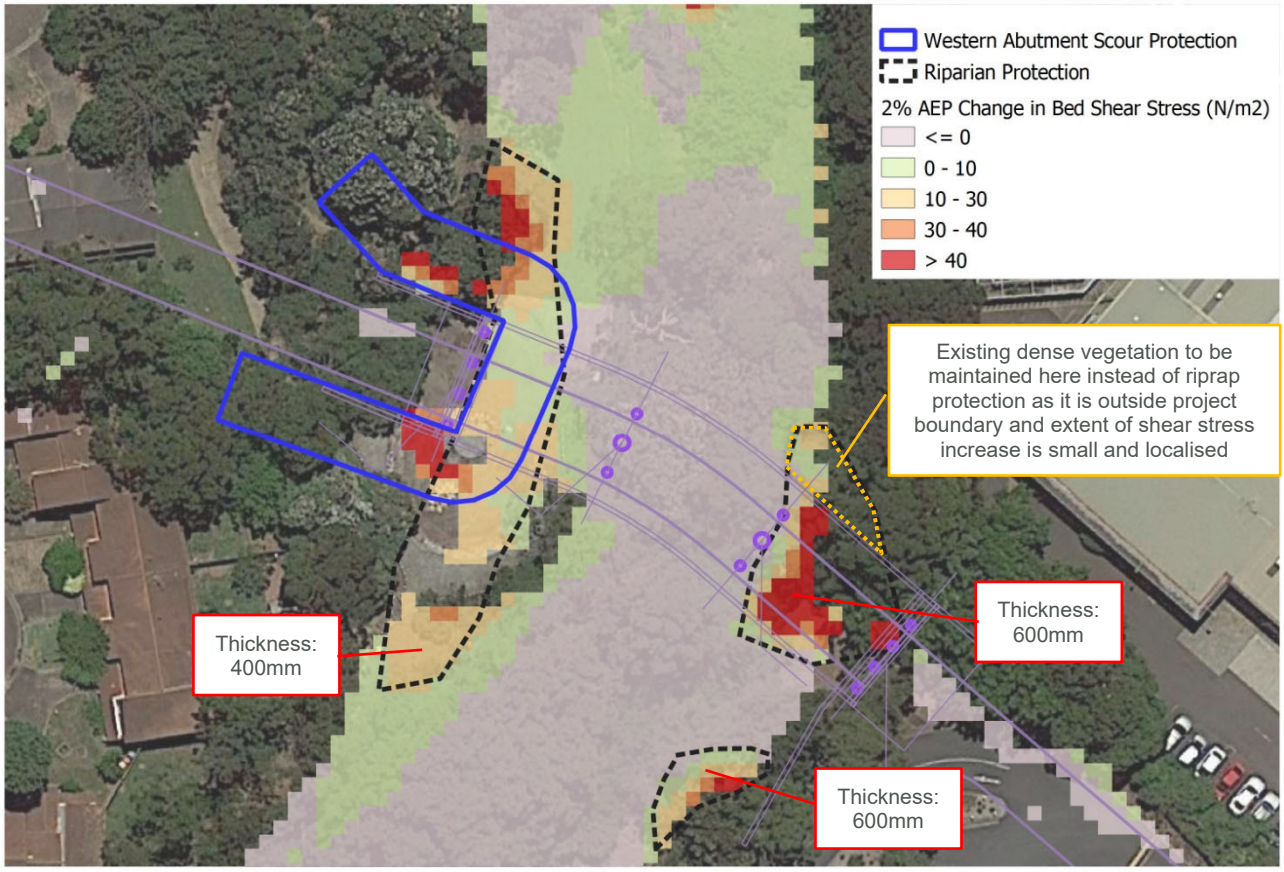

Figure 4-4 Thickness and Extent of Riparian Protection

5 Conclusion

The flood and scour assessment undertaken herein for the proposed Shrimptons Creek bridge has assessed the impact of the construction of the proposed bridge on existing flood behaviour within the Shrimptons Creek corridor, as well as to provide criteria for scour protection for the proposed bridge structure. The assessment also addresses the conditions provided in the State Significant Development consent document (SSD 8903) for the detailed design of the bridge.

Flood behaviour at the site was defined based on the application of an updated version of the TUFLOW hydraulic model previously used by BMT for the 'Shrimptons Creek Bridge Hydrologic and Hydraulic Assessment' (BMT, 2018), that included refinements to incorporate the latest design terrain, as well as bridge pier and abutment design provided by SMEC and ADW Johnson Pty Ltd. The updated model was used to simulate the following scenarios:

- Baseline Scenario, i.e. existing flood conditions; and
- Proposed Scenario, i.e. future flood conditions following the construction of the proposed Shrimptons Creek bridge and abutments.

Results from the TUFLOW hydraulic model were used to determine existing and proposed flood behaviours, as well as to assess any local flood impacts resulting from the construction of the proposed Shrimptons Creek bridge. Peak flood levels upstream of the proposed bridge for post-work conditions are summarised in Table 5-1.

Table 5-1 Upstream Peak Flood Levels for Proposed Shrimptons Creek Bridge

Design Flood Event	Peak Flood Levels (mAHD)
5% AEP	44.5
2% AEP	44.5
1% AEP	44.7
0.05% AEP	45.2
PMF	46.1

Based on detailed design, the top of the bridge deck ranges from 46.729 – 47.237 mAHD, and the peak flood level in the PMF (at the upstream side of the proposed bridge) is 46.1 mAHD. Therefore, the abutments to the bridge and the top of the bridge deck are not predicted to be overtopped by floodwaters from Shrimptons Creek during flood events up to and including the PMF.

The proposed bridge design incorporates abutments on both the western and eastern creek banks of Shrimptons Creek. As a result, there is a localised concentration of flow within the reduced cross-sectional area of Shrimptons Creek resulting from the bridge. The broader flow distribution further upstream and downstream remains relatively unchanged between the existing and proposed bridge scenarios.

Increases in peak flood levels for design flood events up to and including the 1% AEP are generally localised and predominantly contained within the Shrimptons Creek corridor between the Epping

Road underpass and the proposed bridge location. Velocity increases are relatively minor and localised for events up to and including the 1% AEP. Thus, the overall risk of erosional damage to Shrimptons Creek associated with the construction of the proposed bridge is minimal.

Although there are predicted impacts on flood behaviour, impacts are largely contained within the Shrimptons Creek corridor. Properties upstream and downstream of the proposed bridge are not predicted to be adversely impacted by changes in peak flood level or velocity up to and including the 1% AEP design flood event. It should also be noted that the impact outcomes predicted herein for the current detailed design of the bridge are similar to those for the previous bridge design, as documented in the 'Shrimptons Creek Bridge Hydrologic and Hydraulic Assessment' (BMT, 2018) and approved as part of the Stage 1 SSDA.

Scour assessment of the proposed bridge structure has also been undertaken, as well as the design of scour protection for events up to and including the 2% AEP for the bridge abutments and riparian corridor (refer details in Section 4).

In summary, the flood and scour assessment herein addresses the following conditions in the State Significant Development consent document (SSD 8903) for the detailed design bridge option considered as outlined in Table 5-2.

Table 5-2 Approved SSD Consent Flood and Scour Requirements

SSD 8903 Requirements	BMT Comment
Condition B103(d): *maintain the height of the lowest structural element of the bridge at the 1% AEP flood level plus 500 mm freeboard as a minimum.*	Condition met: The height of the lowest structural element of the proposed bridge (i.e. 45.563 mAHD) is above the 1% AEP flood level plus 500 mm freeboard (i.e. 45.2 mAHD).
Condition B103(e): *the report shall assess the impact of embankment works on both north-western and north-eastern sides of the bridge on the proposed approach roads and the surrounding properties to ensure any adverse impact from ponding of water (if any) is alleviated.*	Condition met: The flood impacts as a result of the proposed bridge and abutment works (on western and eastern sides of the bridge) are localised and contained within the Shrimptons Creek corridor. Properties upstream and downstream of the proposed bridge are not impacted by the changes in peak flood level or velocity up to and including the 1% AEP design flood event.
Condition B103(g): *scour protection shall be provided for the bridge piers, abutment and constricted creek waterway and riparian corridor for events up to the 2% AEP. Provision for appropriate plant access to the bridge for maintenance, including for repair and replacement of the scour protection, shall be provided.*	Condition met: Scour protection is proposed for the bridge abutments and constricted creek waterway and riparian corridor for events up to the 2% AEP. The Austroads (2018) and TMR (2019) scour guidelines do not recommend scour protection for piers of new bridges. Therefore, the proposed bridge shall be designed by taking into account the estimated maximum scour depth at piers to make sure that the structural integrity of the bridge will be maintained for the life of the structure under the Ultimate Limit States (1 in 2,000 AEP event) total scour depth.

6 References

Austroads, (2018) *Guide to Bridge Technology Part 8: Hydraulic Design of Waterway Structures*

Ball J, Babister M, Nathan R, Weeks W, Weinmann E, Retallick M, Testoni I, (2019) *Australian Rainfall and Runoff: A Guide to Flood Estimation*

Bewsher Consulting, (2010) *Macquarie Park Floodplain Risk Management Study and Plan*

BMT WBM, (2017) *Flood Impact Assessment for Ivanhoe Estate Master Plan*

BMT, (2018) *Shrimptons Creek Bridge Hydrologic and Hydraulic Assessment*

Bureau of Meteorology, (2003) *The Estimation of Probable Maximum Precipitation in Australia: Generalised Short-Duration Method*

Department of Transport and Main Roads, (2019) *Bridge Scour Manual: Supplement to Austroads Guide to Bridge Technology Part 8, Chapter 5: Bridge Scour (2018)*

Pilgrim D H, (2001) *Australian Rainfall and Runoff: A Guide to Flood Estimation*

U.S. Federal Highway Administration, (1978) *Hydraulic of Bridge Waterways*

Appendix A Existing Condition Peak Flood Results

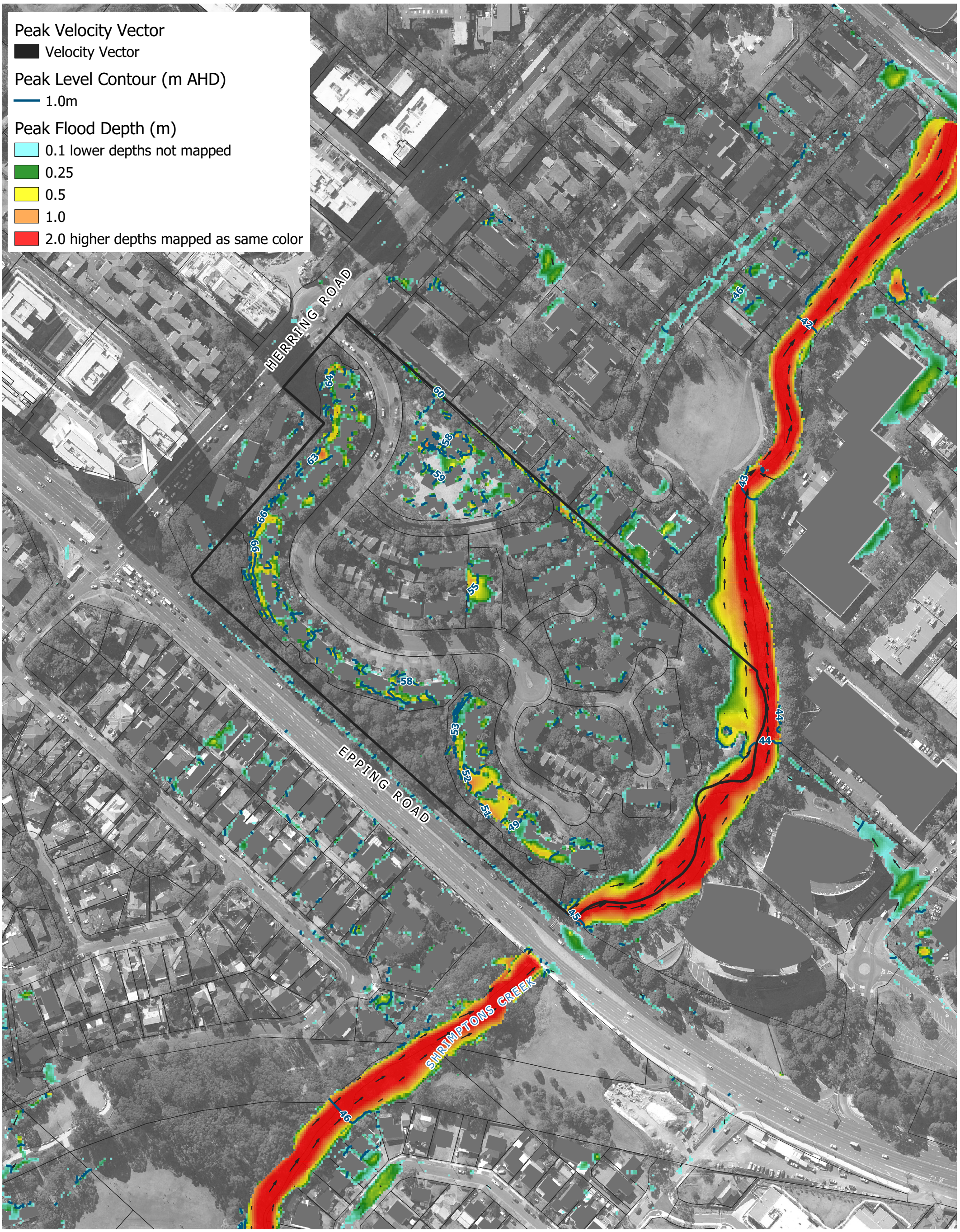

Legend

Site Boundary

Title:

Peak Flood Depth and Level Contours - 5% AEP Event Base Unblocked Scenario

Drawing: **A-1**

Rev: **A**

BMT endeavours to ensure that the information provided in this map is correct at the time of publication. BMT does not warrant, guarantee or make representations regarding the currency and accuracy of information contained in this map.

0 50 100 m

BMT
www.bmt.org

Filepath: S:\WATER\PROJECTS\A11013_Ivanhoe_Bridge_DD\QGIS\Figure_Generator_Project_Data_Base\Project\A11013_Base_Figures.qgz

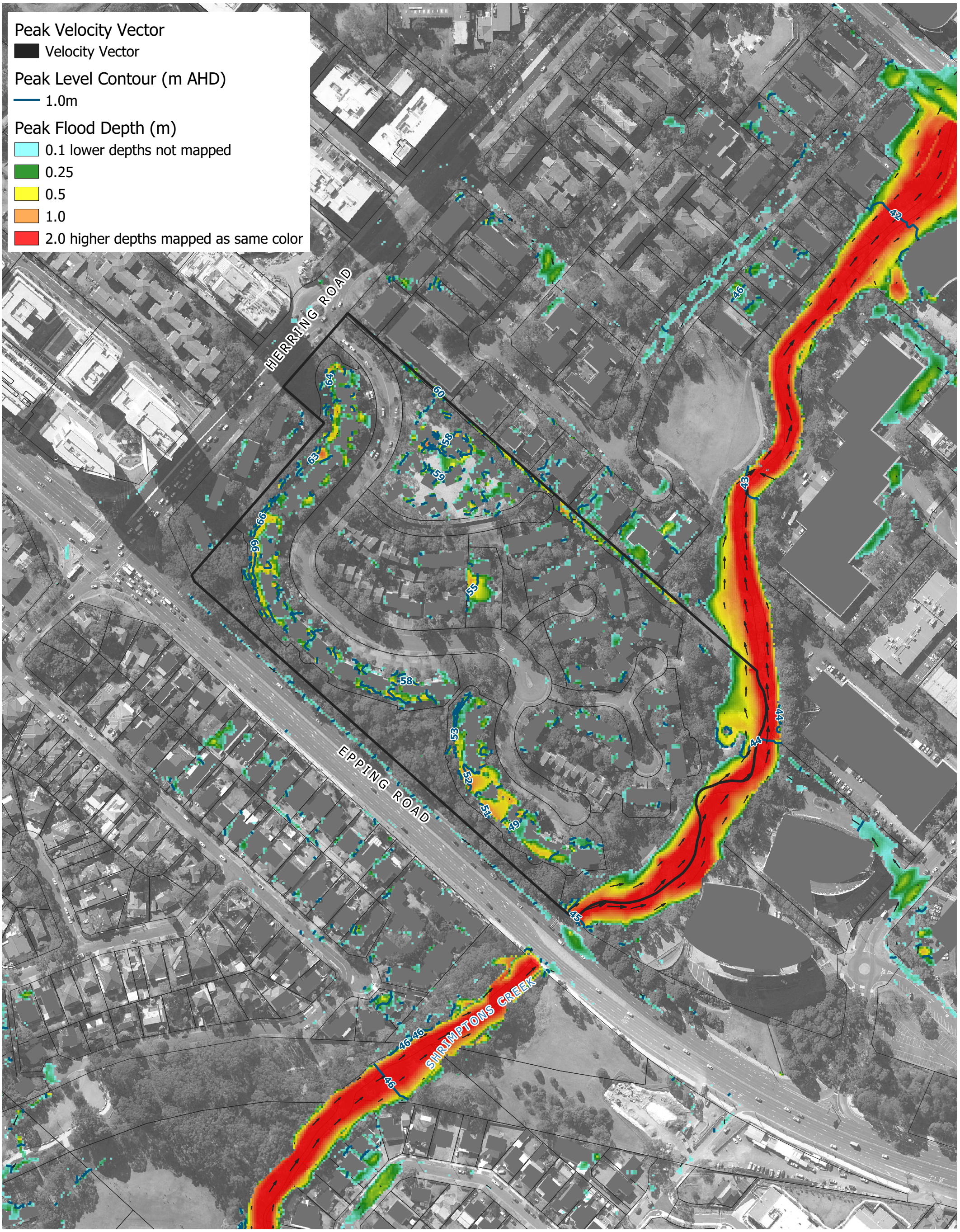

Legend

Site Boundary

Title:

Peak Flood Depth and Level Contours - 5% AEP Event Base Blocked Scenario

Drawing: **A-2**

Rev: **A**

BMT endeavours to ensure that the information provided in this map is correct at the time of publication. BMT does not warrant, guarantee or make representations regarding the currency and accuracy of information contained in this map.

0 50 100 m

BMT
www.bmt.org

Filepath: S:\WATER\PROJECTS\A11013_Ivanhoe_Bridge_DD\QGIS\Figure_Generator_Project_Data_Base\Project\A11013_Base_Figures.qgz

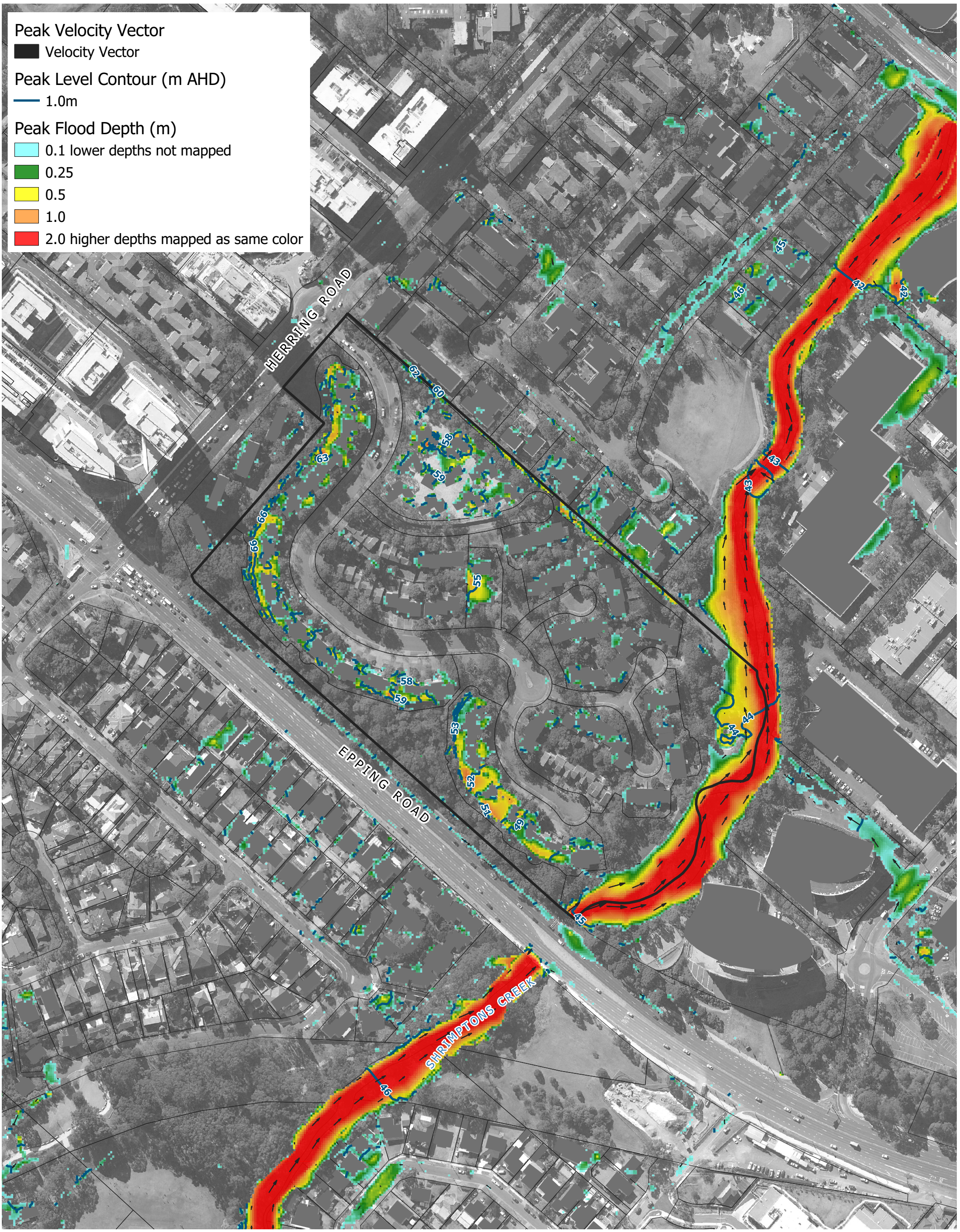

Legend

Site Boundary

Title:

Peak Flood Depth and Level Contours - 2% AEP Event Base Unblocked Scenario

Drawing: **A-3**

Rev: **A**

BMT endeavours to ensure that the information provided in this map is correct at the time of publication. BMT does not warrant, guarantee or make representations regarding the currency and accuracy of information contained in this map.

0 50 100 m

BMT
www.bmt.org

Filepath: S:\WATER\PROJECTS\A11013_Ivanhoe_Bridge_DD\QGIS\Figure_Generator_Project_Data_Base\Project\A11013_Base_Figures.qgz

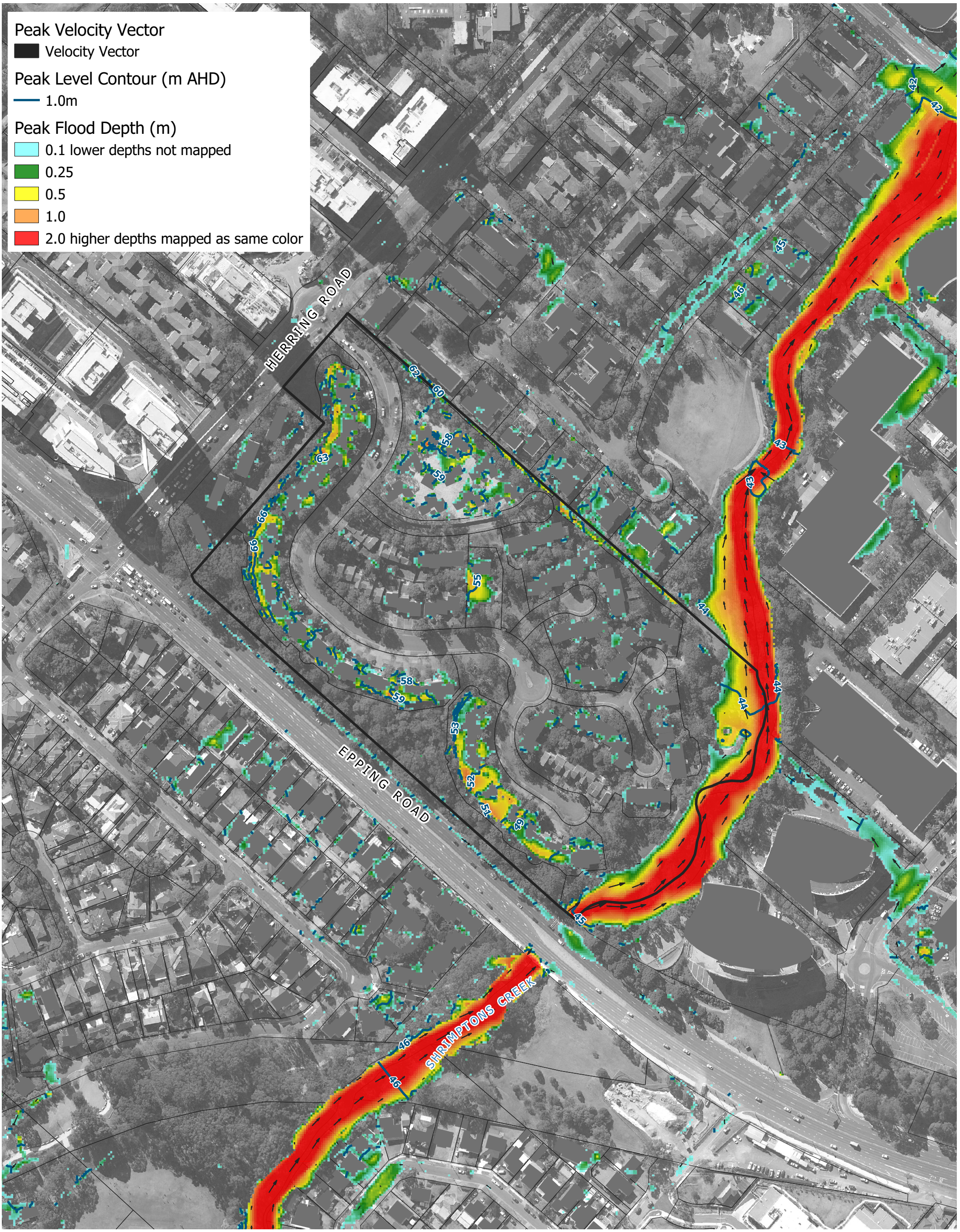

Legend

Site Boundary

Title:

Peak Flood Depth and Level Contours - 2% AEP Event Base Blocked Scenario

Drawing: **A-4**

Rev: **A**

BMT endeavours to ensure that the information provided in this map is correct at the time of publication. BMT does not warrant, guarantee or make representations regarding the currency and accuracy of information contained in this map.

0 50 100 m

BMT
www.bmt.org

Filepath: S:\WATER\PROJECTS\A11013_Ivanhoe_Bridge_DD\QGIS\Figure_Generator_Project_Data_Base\Project\A11013_Base_Figures.qgz

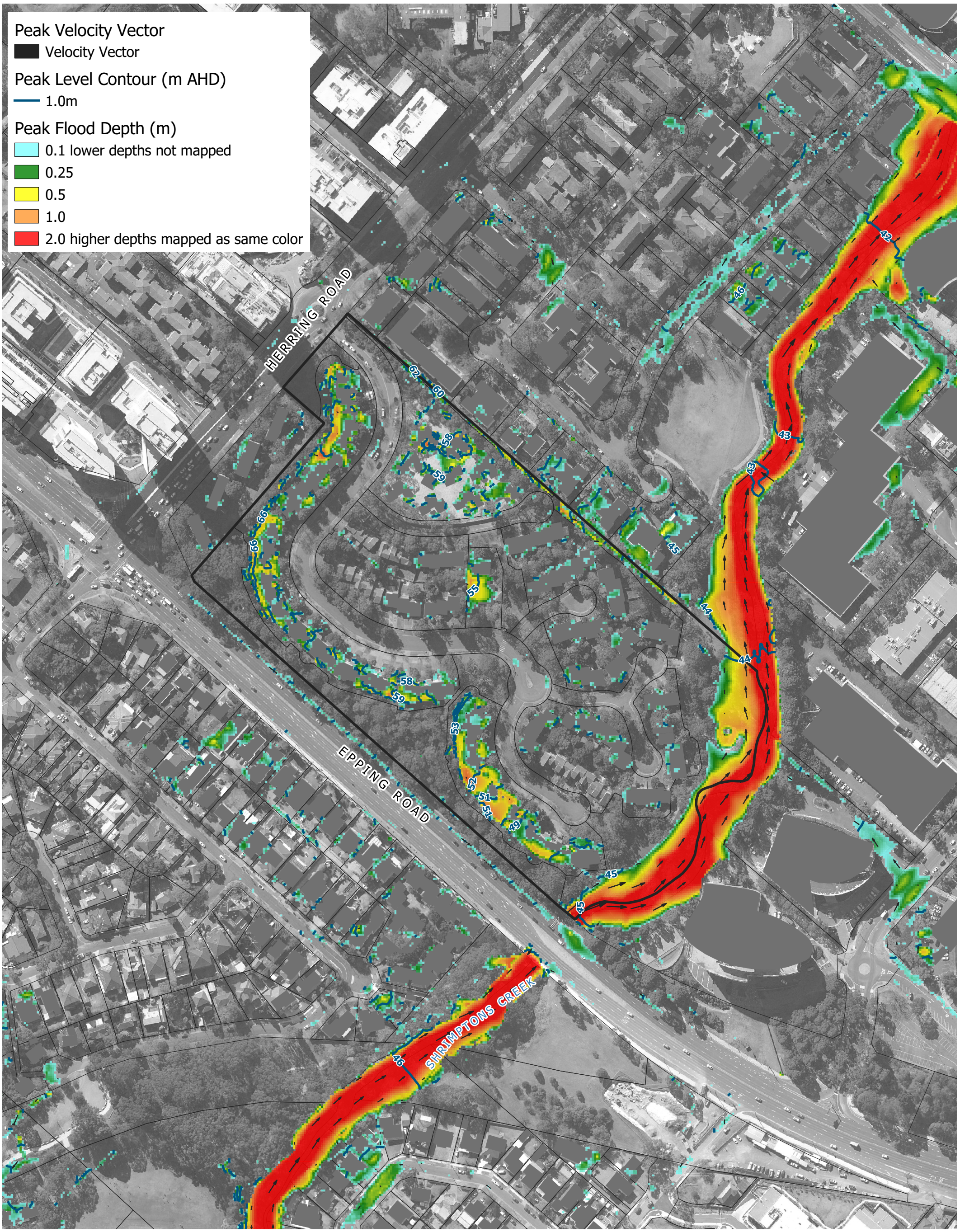

Legend

Site Boundary

Title:

Peak Flood Depth and Level Contours - 1% AEP Event Base Unblocked Scenario

Drawing: **A-5**

Rev: **A**

BMT endeavours to ensure that the information provided in this map is correct at the time of publication. BMT does not warrant, guarantee or make representations regarding the currency and accuracy of information contained in this map.

0 50 100 m

BMT
www.bmt.org

Filepath: S:\WATER\PROJECTS\A11013_Ivanhoe_Bridge_DD\QGIS\Figure_Generator_Project_Data_Base\Project\A11013_Base_Figures.qgz

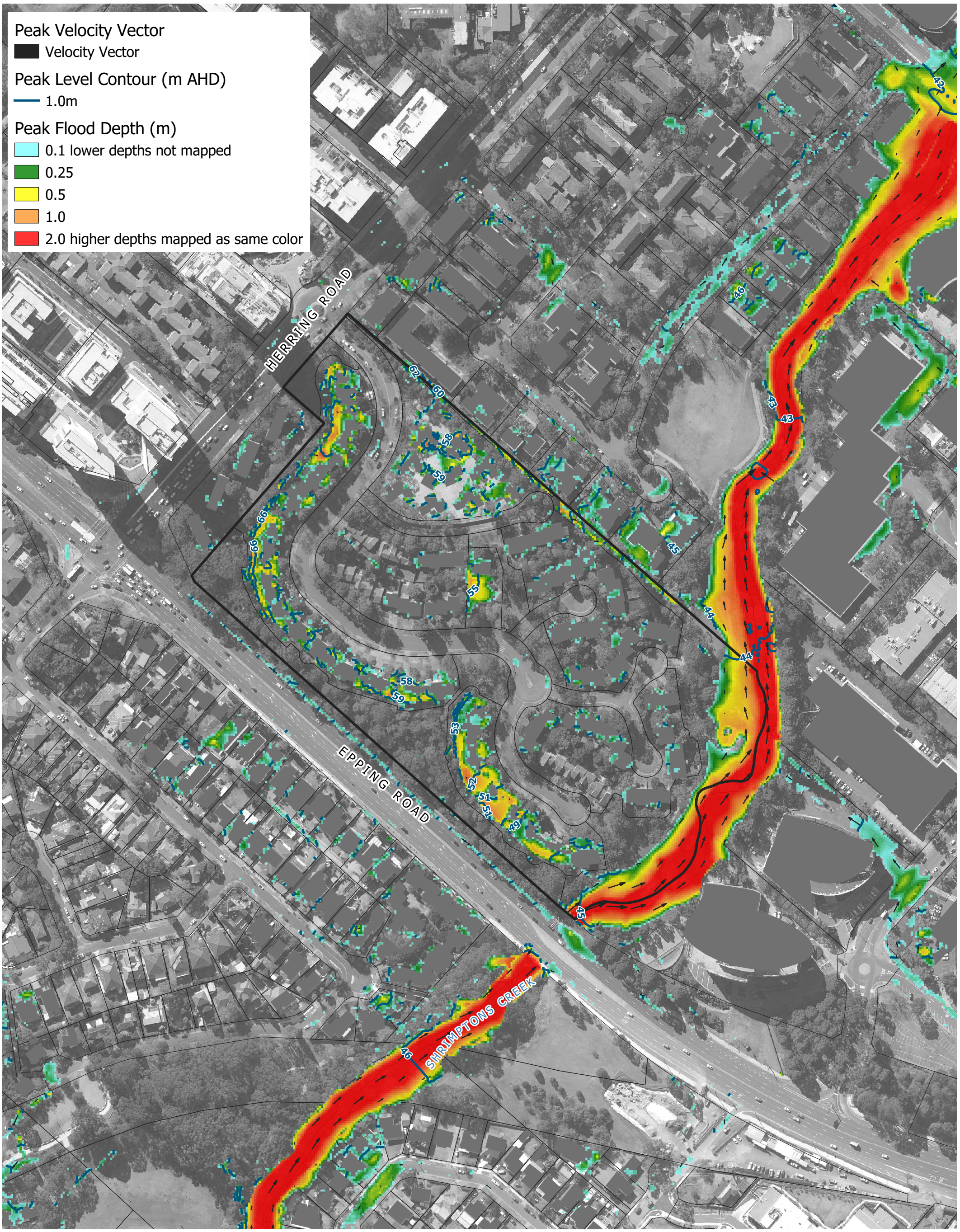

Legend

Site Boundary

Title:

Peak Flood Depth and Level Contours - 1% AEP Event Base Blocked Scenario

Drawing: **A-6**

Rev: **A**

BMT endeavours to ensure that the information provided in this map is correct at the time of publication. BMT does not warrant, guarantee or make representations regarding the currency and accuracy of information contained in this map.

0 50 100 m

BMT
www.bmt.org

Filepath: S:\WATER\PROJECTS\A11013_Ivanhoe_Bridge_DD\QGIS\Figure_Generator_Project_Data_Base\Project\A11013_Base_Figures.qgz

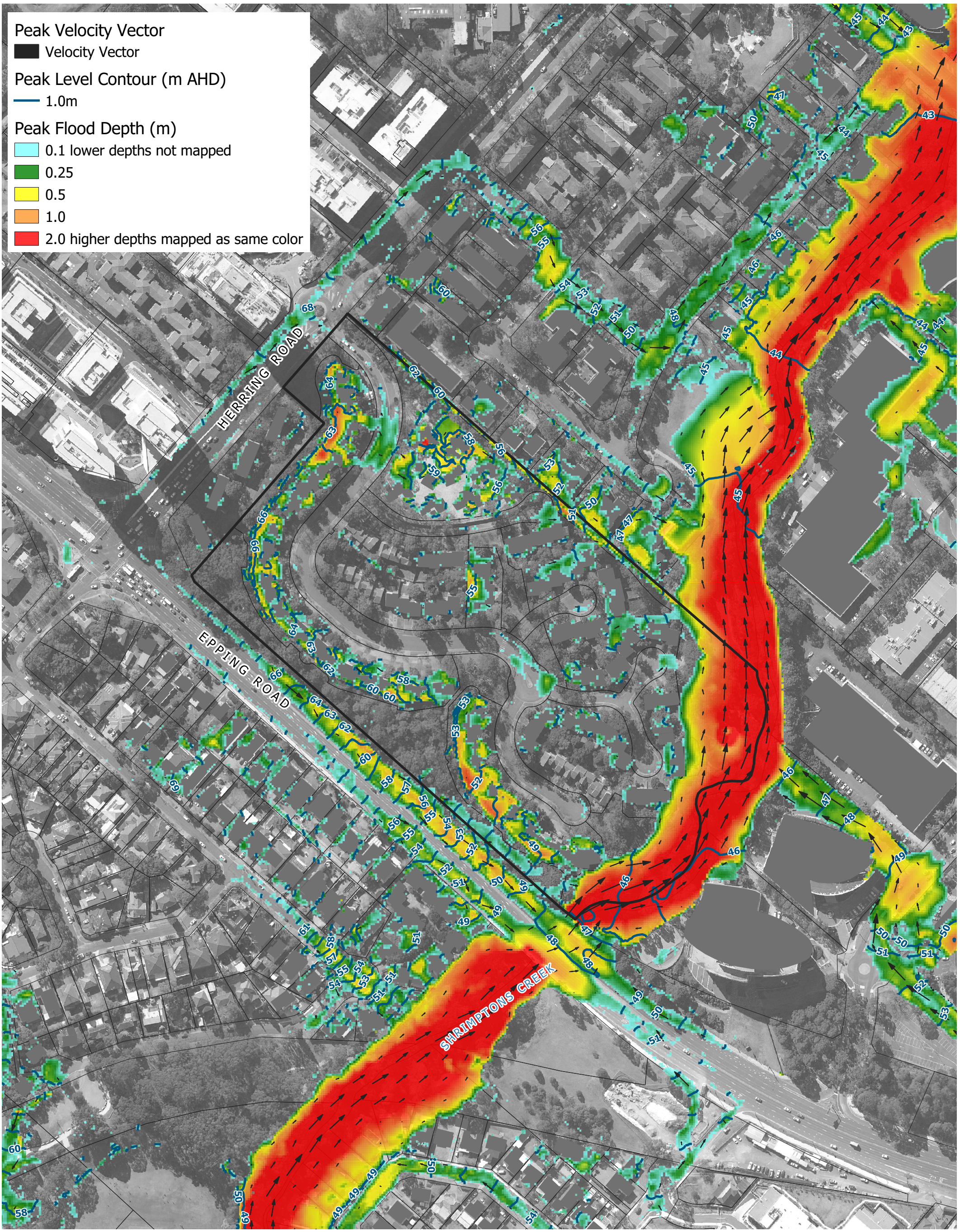

Legend

Site Boundary

Title:

Peak Flood Depth and Level Contours -PMF Event Base Unblocked Scenario

Drawing: **A-7**

Rev: **A**

BMT endeavours to ensure that the information provided in this map is correct at the time of publication. BMT does not warrant, guarantee or make representations regarding the currency and accuracy of information contained in this map.

0 50 100 m

BMT
www.bmt.org

Filepath: S:\WATER\PROJECTS\A11013_Ivanhoe_Bridge_DD\QGIS\Figure_Generator_Project_Data_Base\Project\A11013_Base_Figures.qgz

Appendix B Proposed Scenario Peak Flood Results

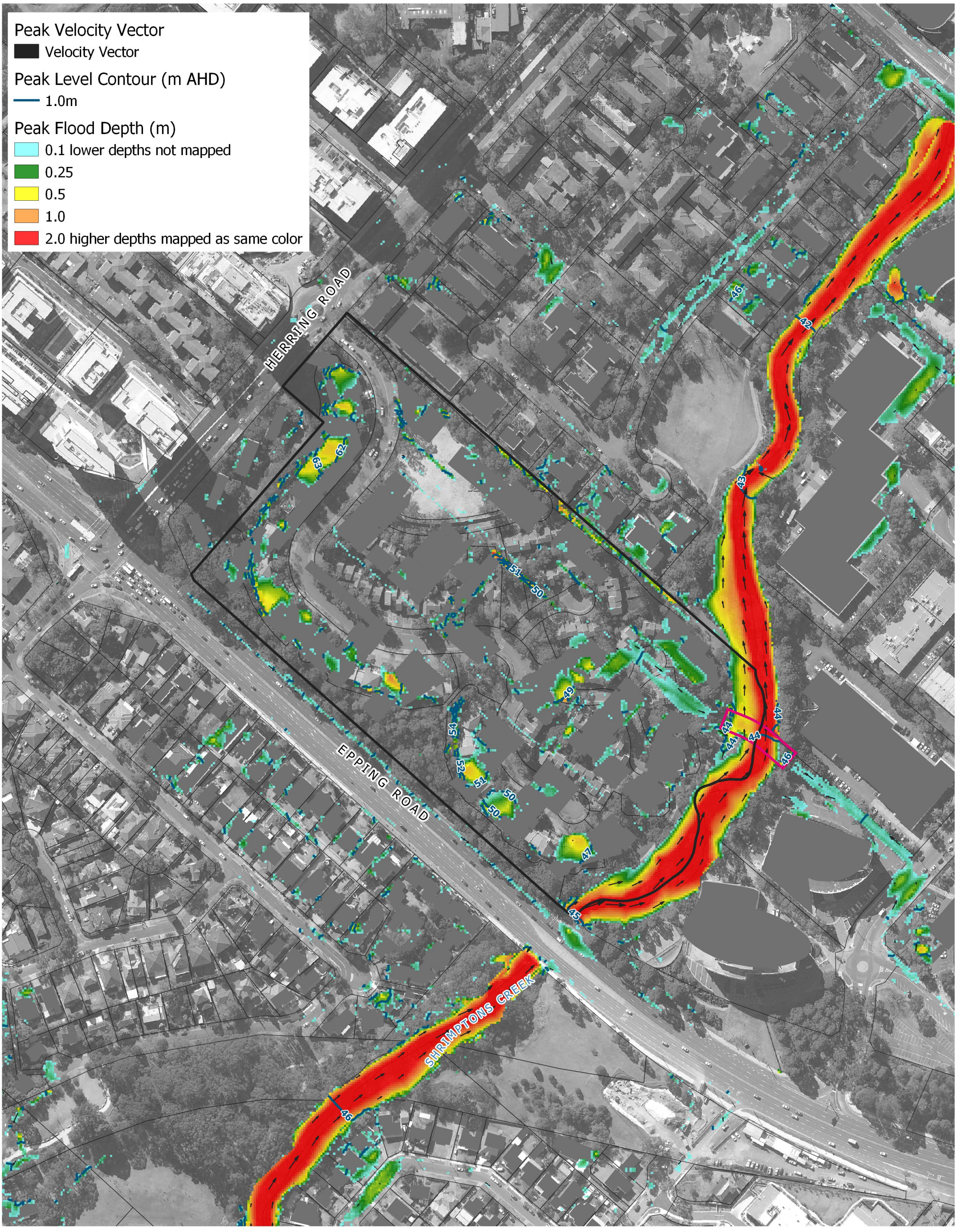

Legend

- Site Boundary
- Proposed Bridge

Title:

Peak Flood Depth and Level Contours - 5% AEP Event Design Unblocked Scenario

Drawing: **B-1**

Rev: **A**

BMT endeavours to ensure that the information provided in this map is correct at the time of publication. BMT does not warrant, guarantee or make representations regarding the currency and accuracy of information contained in this map.

0 50 100 m

BMT
www.bmt.org

Filepath: S:\WATER\PROJECTS\A11013_Ivanhoe_Bridge_DD\QGIS\Figure_Generator_Project_Data_DevA\Project\A11013_DevA_Figures.qgz

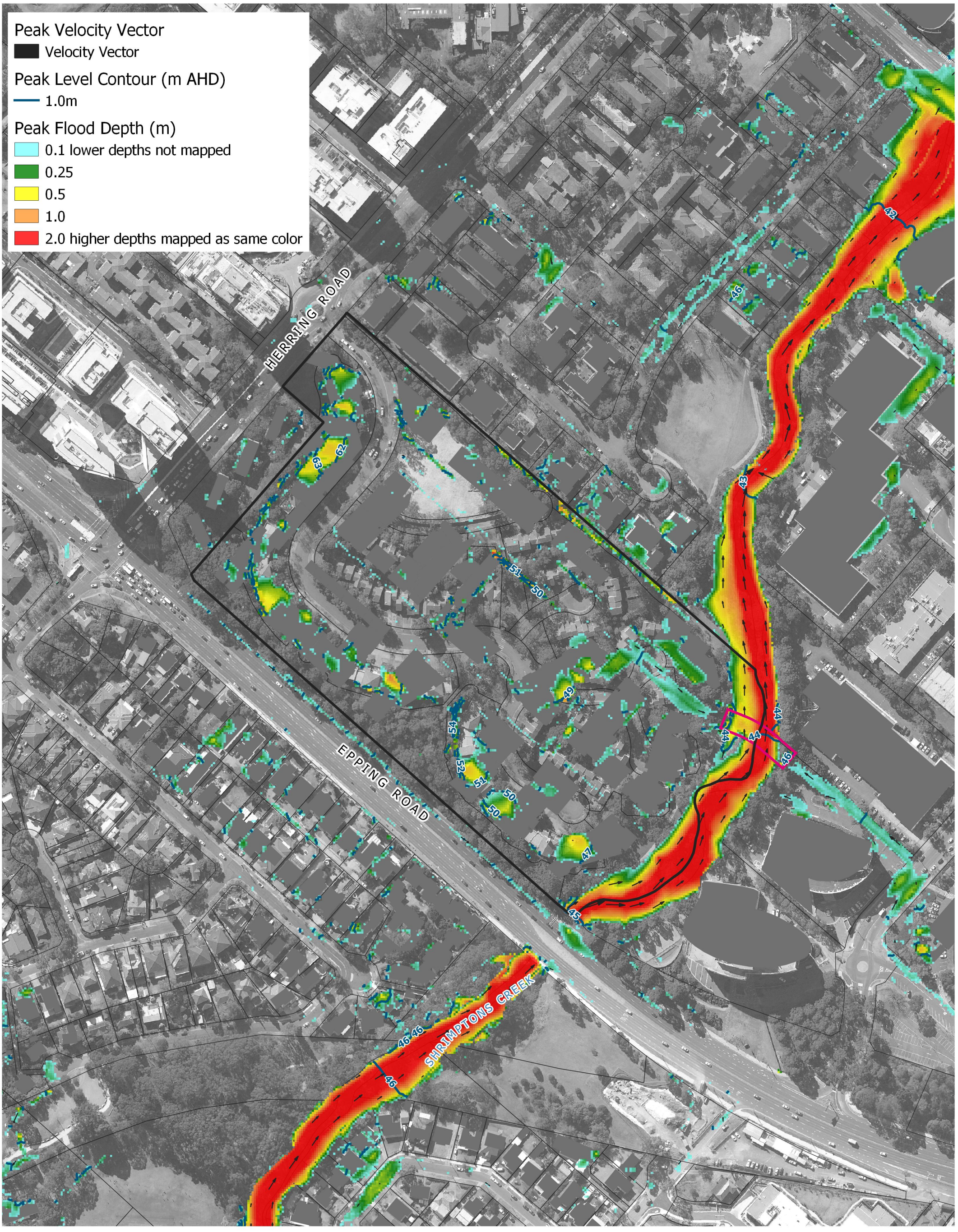

Legend

- Site Boundary
- Proposed Bridge

Title:

Peak Flood Depth and Level Contours - 5% AEP Event Design Blocked Scenario

Drawing: **B-2**

Rev: **A**

BMT endeavours to ensure that the information provided in this map is correct at the time of publication. BMT does not warrant, guarantee or make representations regarding the currency and accuracy of information contained in this map.

0 50 100 m

BMT
www.bmt.org

Filepath: S:\WATER\PROJECTS\A11013_Ivanhoe_Bridge_DD\QGIS\Figure_Generator_Project_Data_DevA\Project\A11013_DevA_Figures.qgz

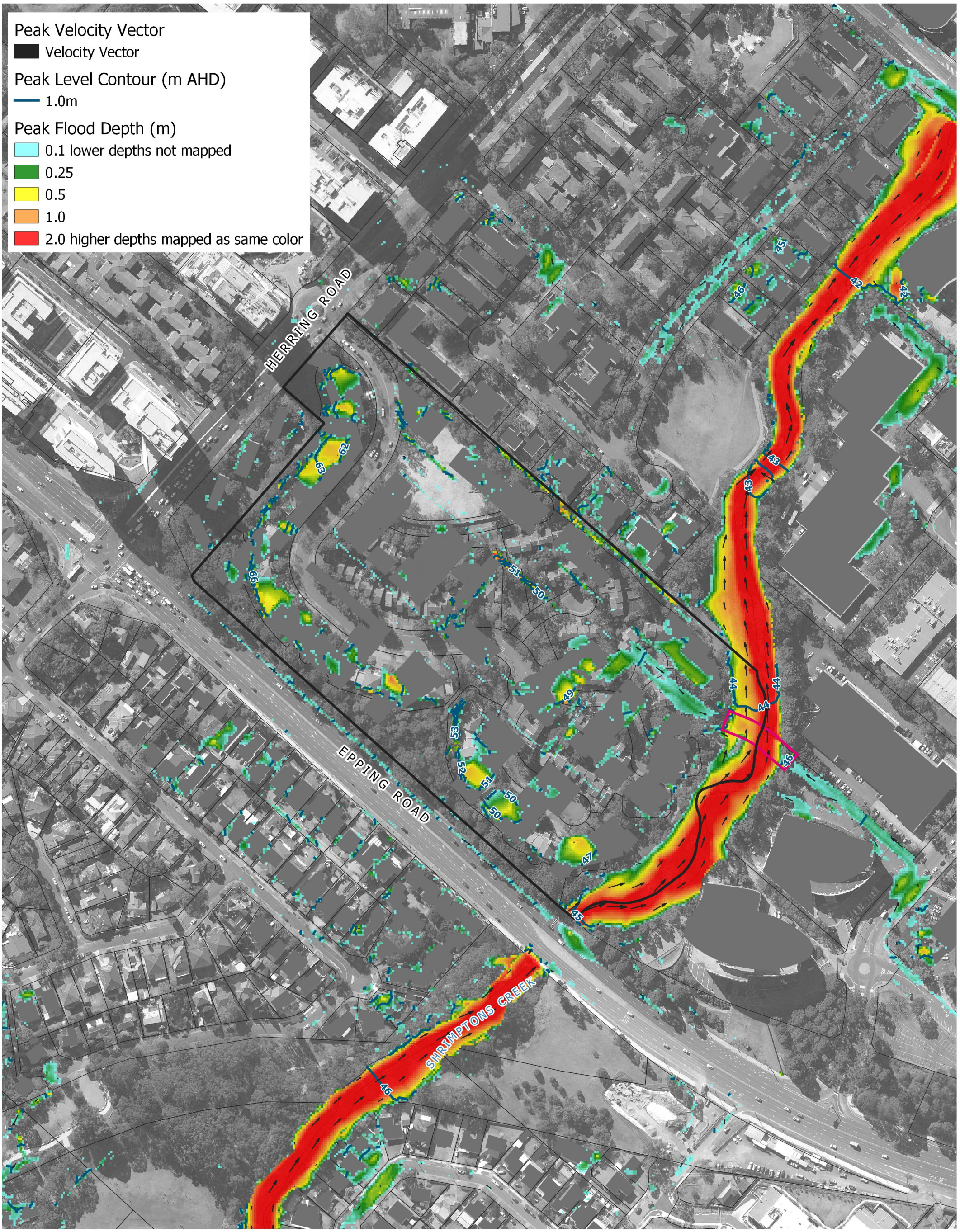

Legend

- Site Boundary
- Proposed Bridge

Title:

Peak Flood Depth and Level Contours - 2% AEP Event Design Unblocked Scenario

Drawing: **B-3**

Rev: **A**

BMT endeavours to ensure that the information provided in this map is correct at the time of publication. BMT does not warrant, guarantee or make representations regarding the currency and accuracy of information contained in this map.

0 50 100 m

BMT
www.bmt.org

Filepath: S:\WATER\PROJECTS\A11013_Ivanhoe_Bridge_DD\QGIS\Figure_Generator_Project_Data_DevA\Project\A11013_DevA_Figures.qgz

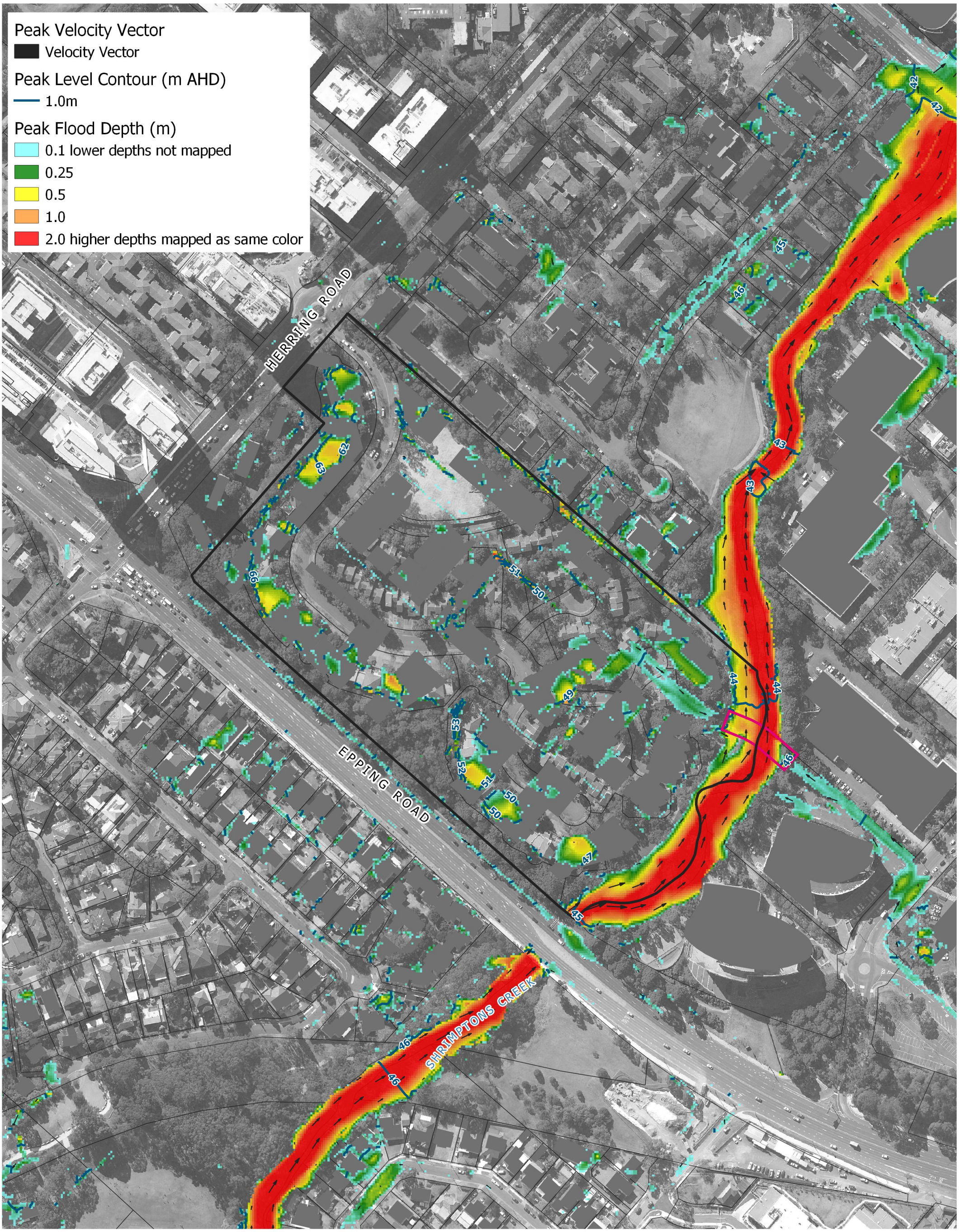

Legend

- Site Boundary
- Proposed Bridge

Title:

Peak Flood Depth and Level Contours - 2% AEP Event Design Blocked Scenario

Drawing: **B-4**

Rev: **A**

BMT endeavours to ensure that the information provided in this map is correct at the time of publication. BMT does not warrant, guarantee or make representations regarding the currency and accuracy of information contained in this map.

0 50 100 m

BMT
www.bmt.org

Filepath: S:\WATER\PROJECTS\A11013_Ivanhoe_Bridge_DD\QGIS\Figure_Generator_Project_Data_DevA\Project\A11013_DevA_Figures.qgz

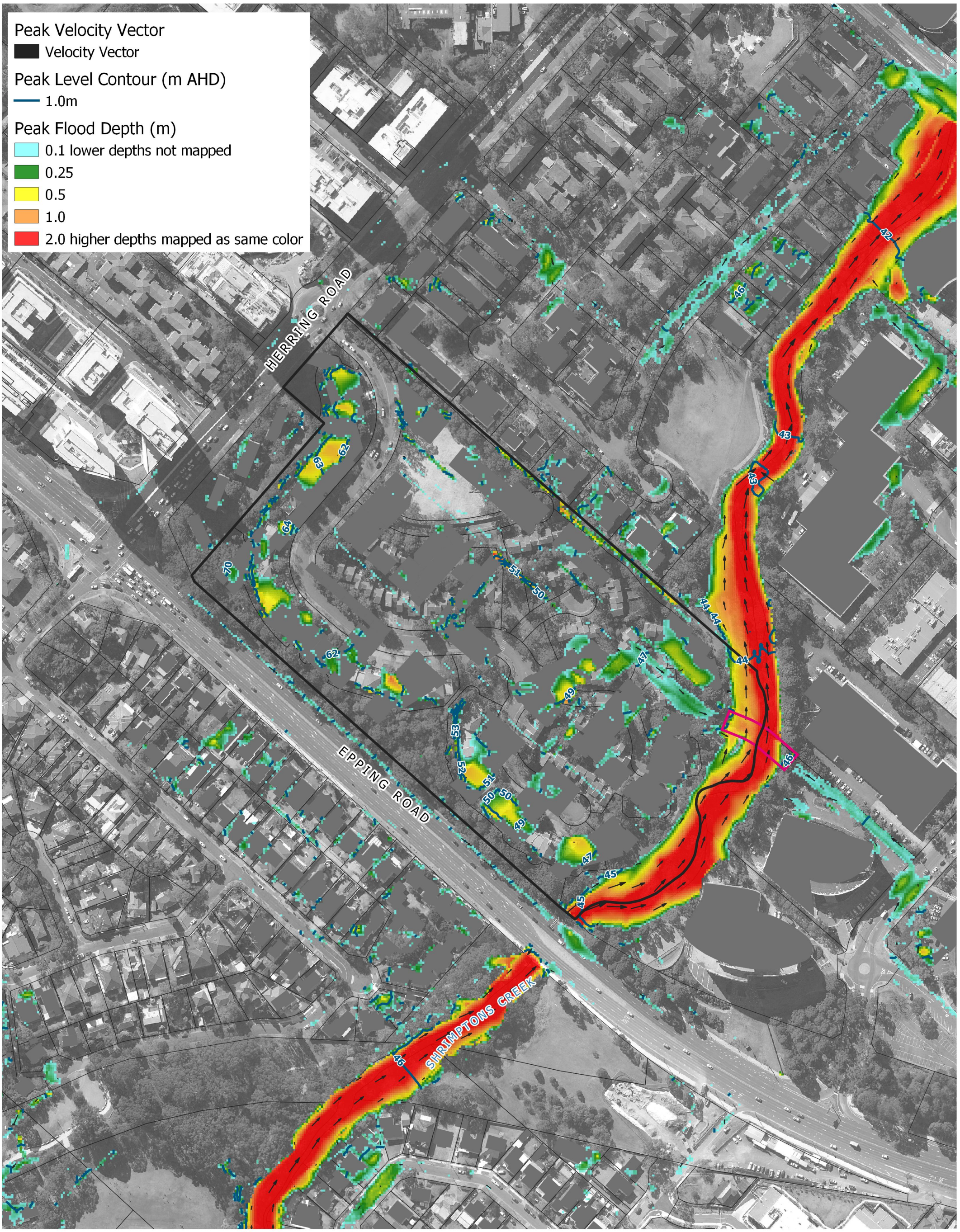

Legend

- Site Boundary
- Proposed Bridge

Title:

Peak Flood Depth and Level Contours - 1% AEP Event Design Unblocked Scenario

Drawing: **B-5**

Rev: **A**

BMT endeavours to ensure that the information provided in this map is correct at the time of publication. BMT does not warrant, guarantee or make representations regarding the currency and accuracy of information contained in this map.

0 50 100 m

BMT
www.bmt.org

Filepath: S:\WATER\PROJECTS\A11013_Ivanhoe_Bridge_DD\QGIS\Figure_Generator_Project_Data_DevA\Project\A11013_DevA_Figures.qgz

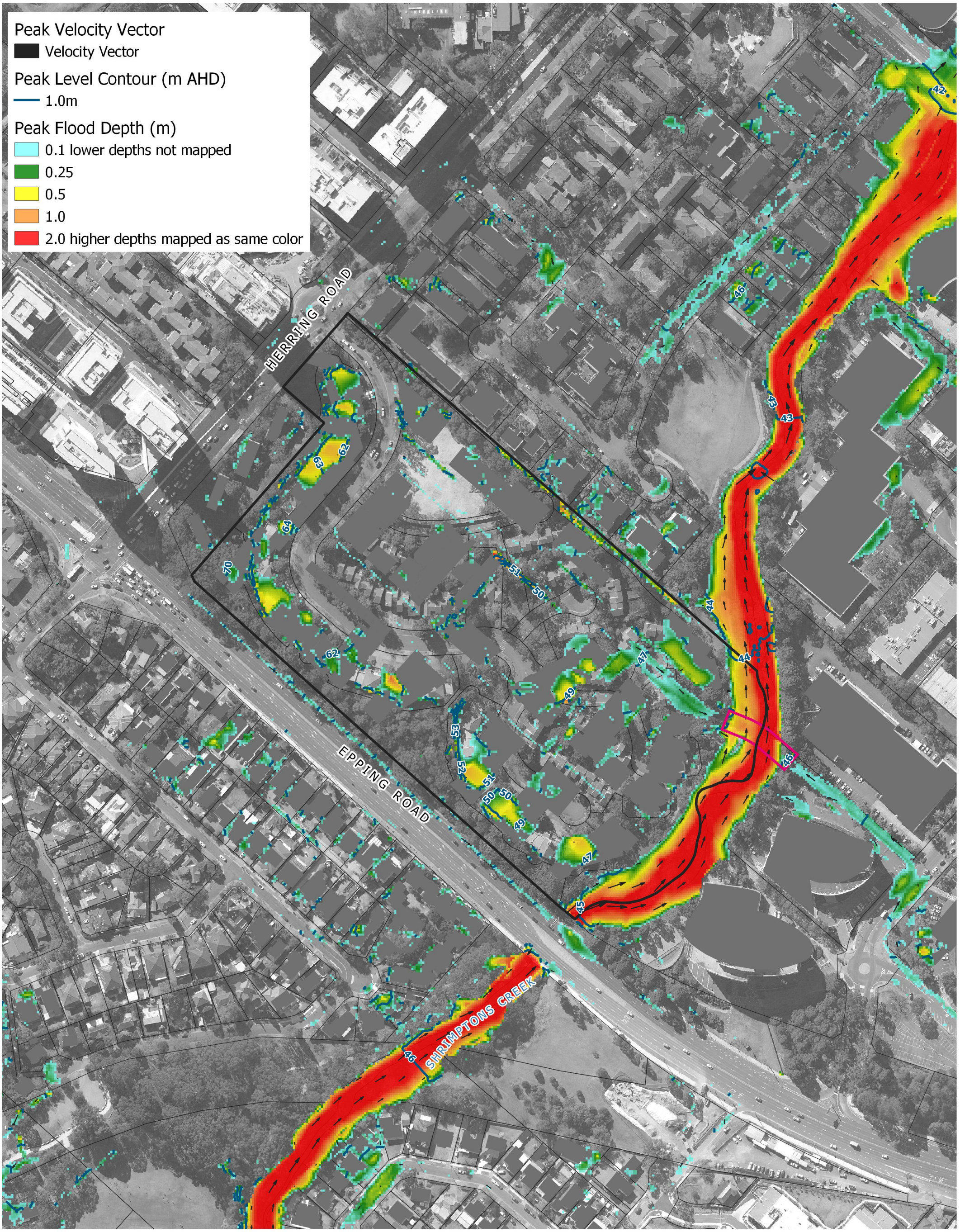

Legend

- Site Boundary
- Proposed Bridge

Title:

Peak Flood Depth and Level Contours - 1% AEP Event Design Blocked Scenario

Drawing: **B-6**

Rev: **A**

BMT endeavours to ensure that the information provided in this map is correct at the time of publication. BMT does not warrant, guarantee or make representations regarding the currency and accuracy of information contained in this map.

0 50 100 m

BMT
www.bmt.org

Filepath: S:\WATER\PROJECTS\A11013_Ivanhoe_Bridge_DD\QGIS\Figure_Generator_Project_Data_DevA\Project\A11013_DevA_Figures.qgz

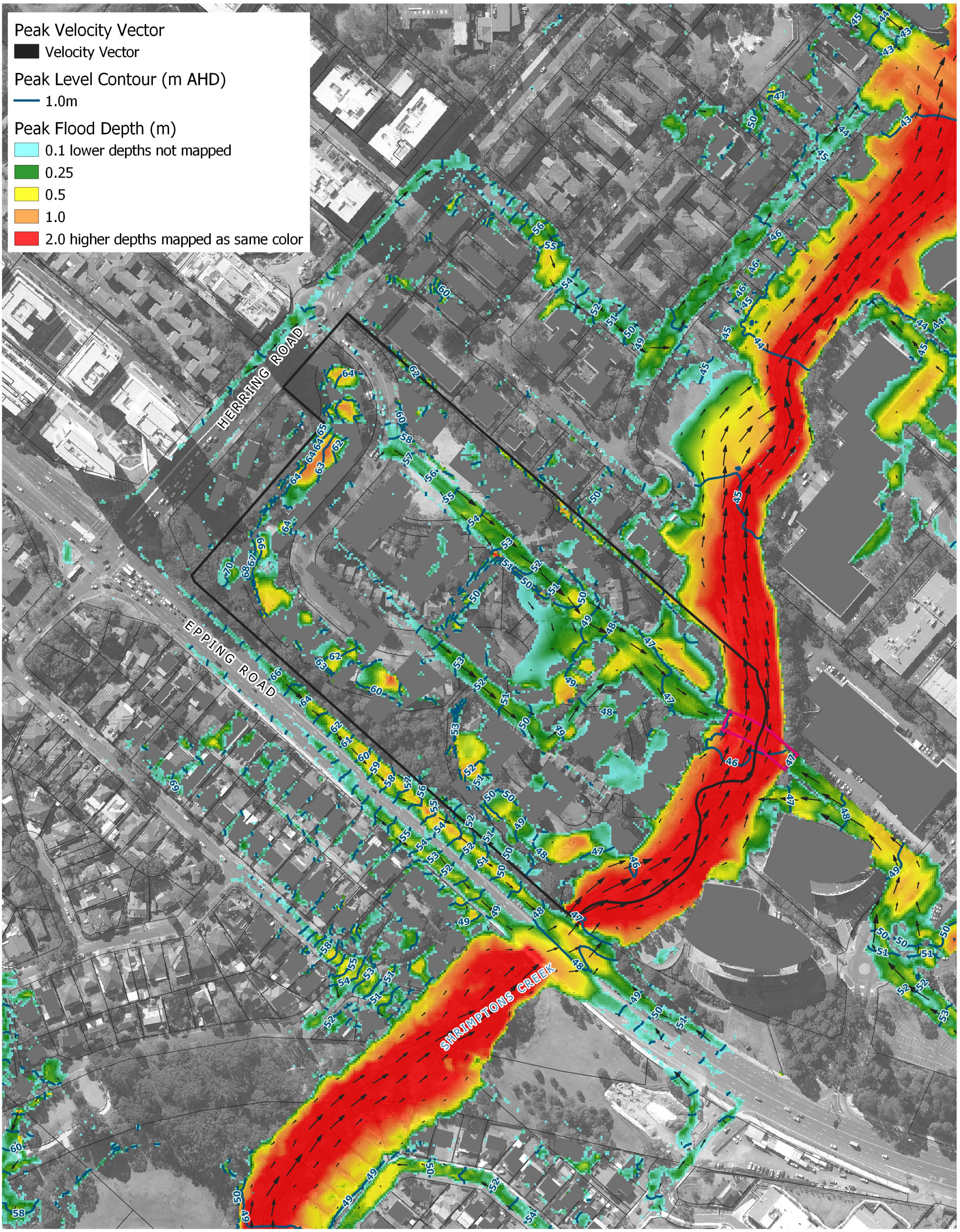

Legend

- Site Boundary
- Proposed Bridge

Title:

Peak Flood Depth and Level Contours -PMF Event Design Unblocked Scenario

Drawing: **B-7**

Rev: **A**

BMT endeavours to ensure that the information provided in this map is correct at the time of publication. BMT does not warrant, guarantee or make representations regarding the currency and accuracy of information contained in this map.

0 50 100 m

BMT
www.bmt.org

Filepath: S:\WATER\PROJECTS\A11013_Ivanhoe_Bridge_DD\QGIS\Figure_Generator_Project_Data_DevA\Project\A11013_DevA_Figures.qgz

Appendix C Flood Impact Mapping

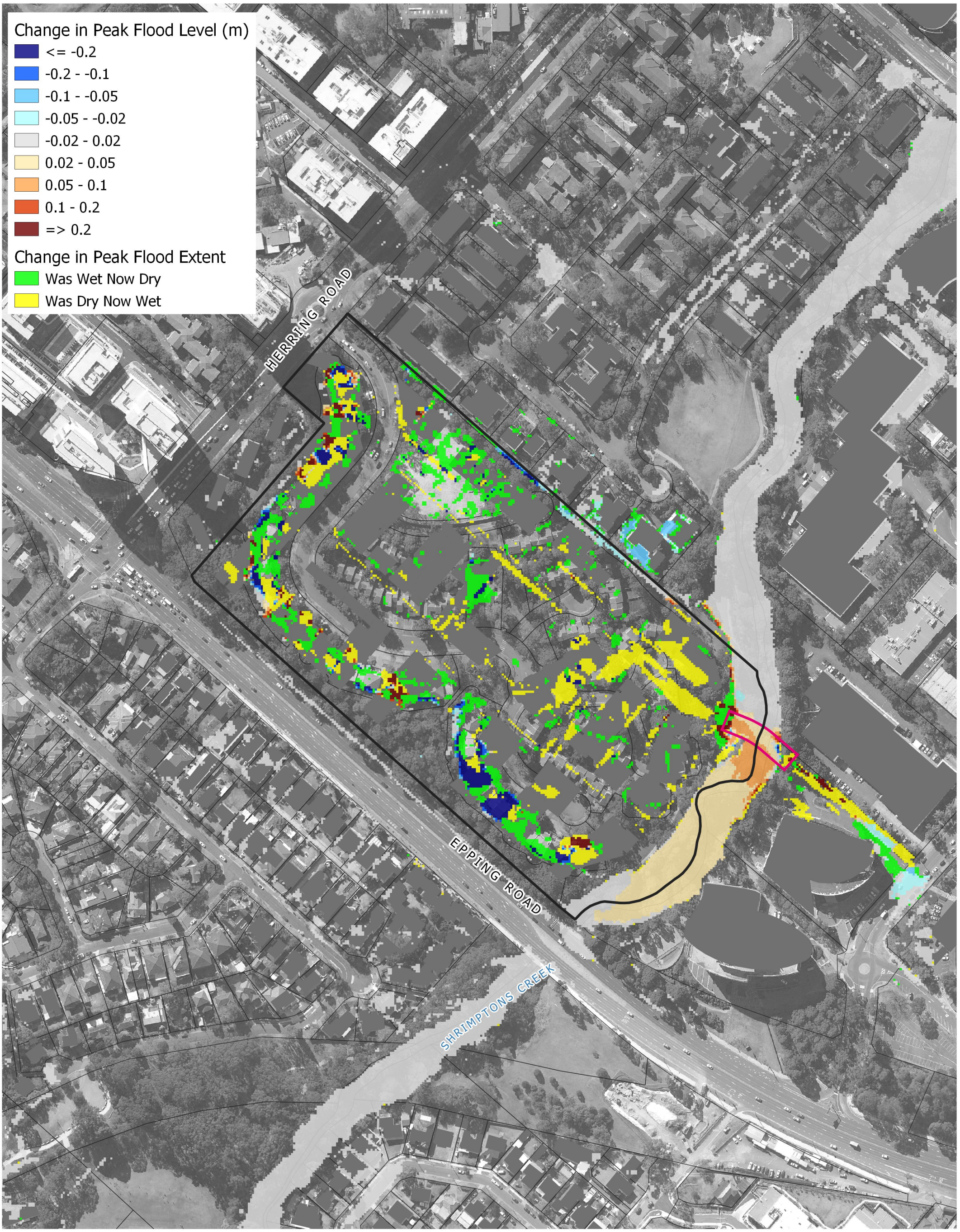

Legend

- Site Boundary
- Proposed Bridge

Title:

Change in Peak Flood Level - 5% AEP Event Unblocked Scenario

Drawing: **C-1**

Rev: **A**

BMT endeavours to ensure that the information provided in this map is correct at the time of publication. BMT does not warrant, guarantee or make representations regarding the currency and accuracy of information contained in this map.

0 50 100 m

BMT
www.bmt.org

Filepath: S:\WATER\PROJECTS\A11013_Ivanhoe_Bridge_DD\QGIS\Figure_Generator_Project_Data_DevA\Project\A11013_DevA_Figures.qgz

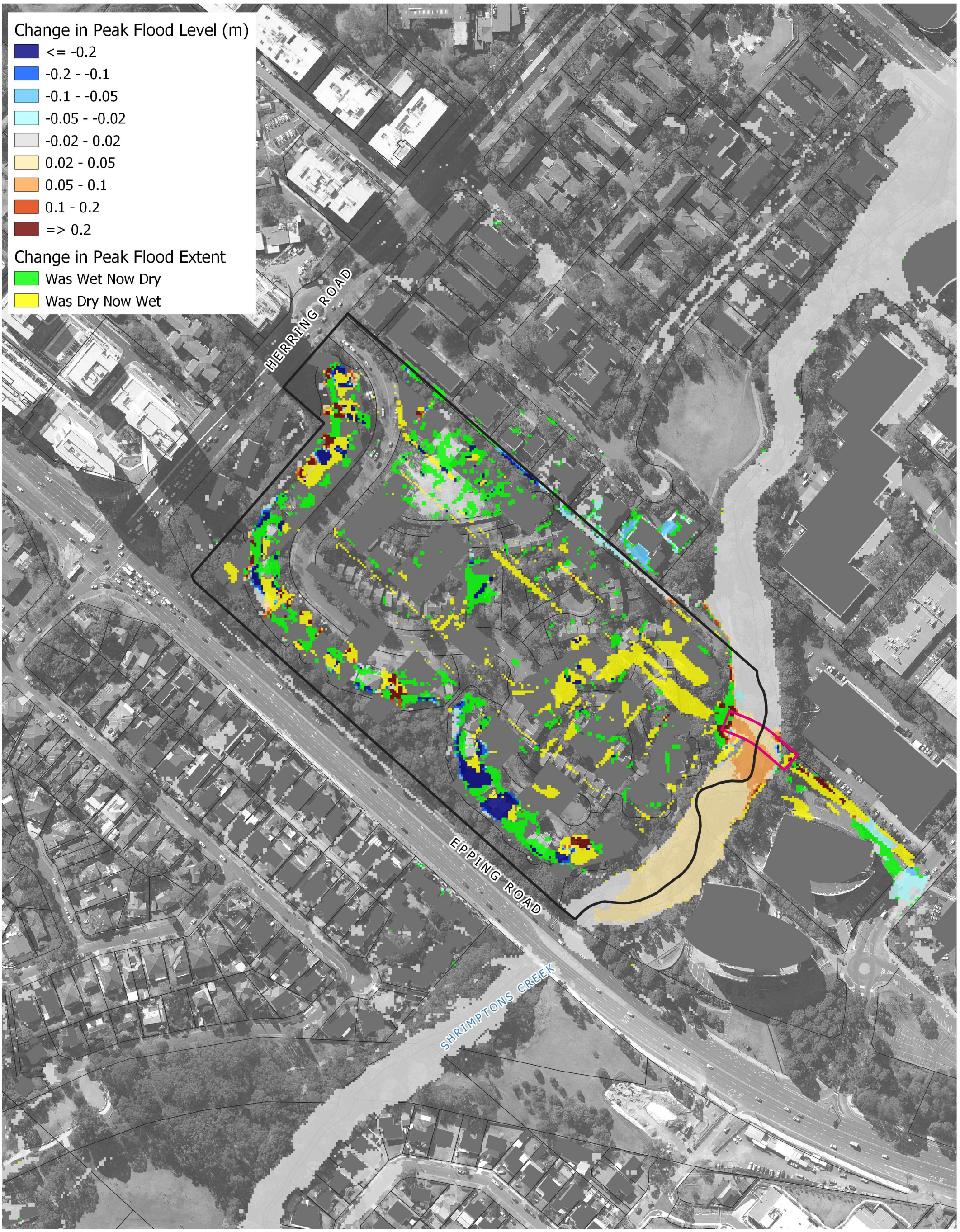

Legend

- Site Boundary
- Proposed Bridge

Title:

Change in Peak Flood Level - 5% AEP Event Blocked Scenario

Drawing: **C-2**

Rev: **A**

BMT endeavours to ensure that the information provided in this map is correct at the time of publication. BMT does not warrant, guarantee or make representations regarding the currency and accuracy of information contained in this map.

0 50 100 m

BMT
www.bmt.org

Filepath: S:\WATER\PROJECTS\A11013_Ivanhoe_Bridge_DD\QGIS\Figure_Generator_Project_Data_DevA\Project\A11013_DevA_Figures.qgz

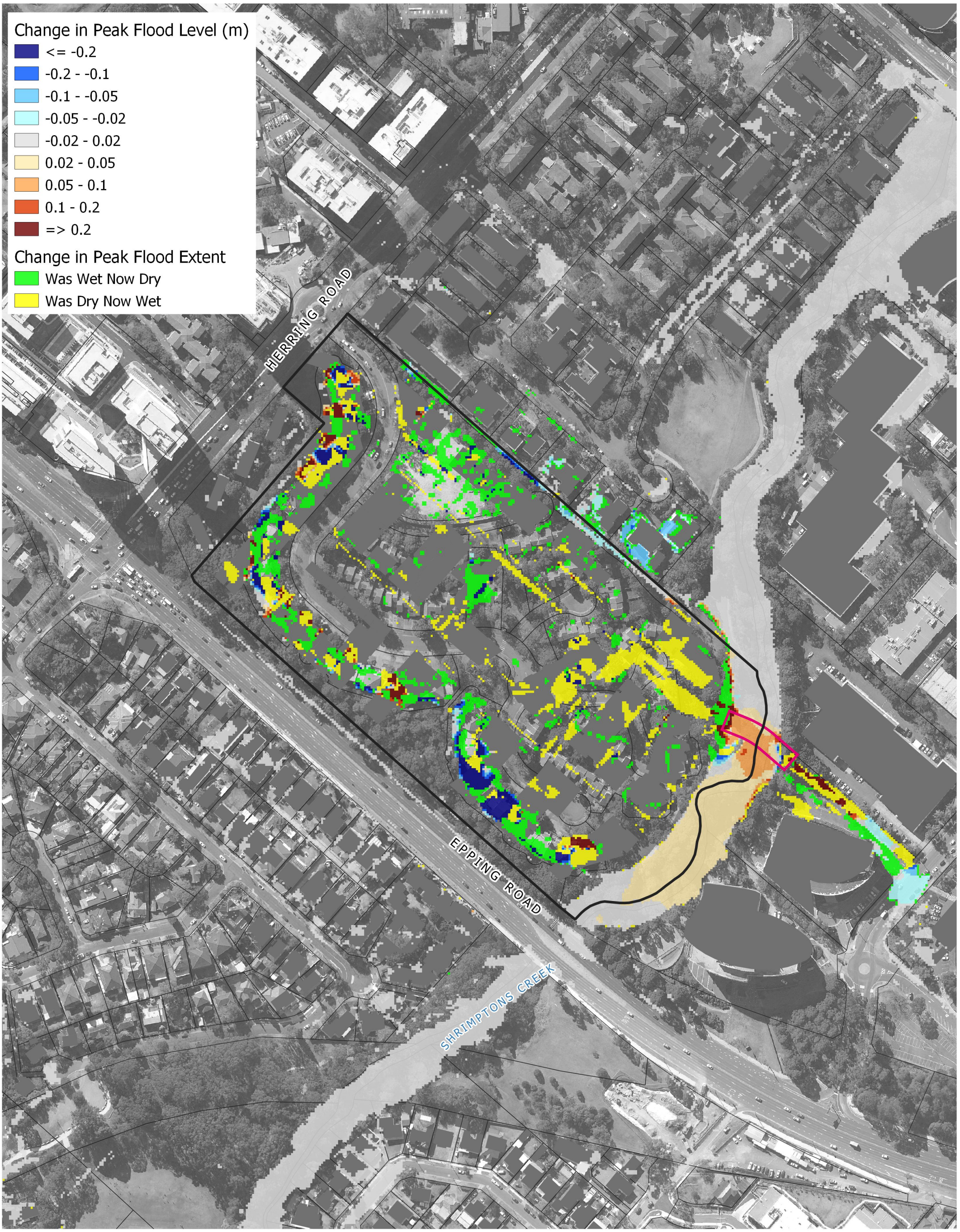

Legend

- Site Boundary
- Proposed Bridge

Title:

Change in Peak Flood Level - 2% AEP Event Unblocked Scenario

Drawing: **C-3**

Rev: **A**

BMT endeavours to ensure that the information provided in this map is correct at the time of publication. BMT does not warrant, guarantee or make representations regarding the currency and accuracy of information contained in this map.

0 50 100 m

BMT
www.bmt.org

Filepath: S:\WATER\PROJECTS\A11013_Ivanhoe_Bridge_DD\QGIS\Figure_Generator_Project_Data_DevA\Project\A11013_DevA_Figures.qgz

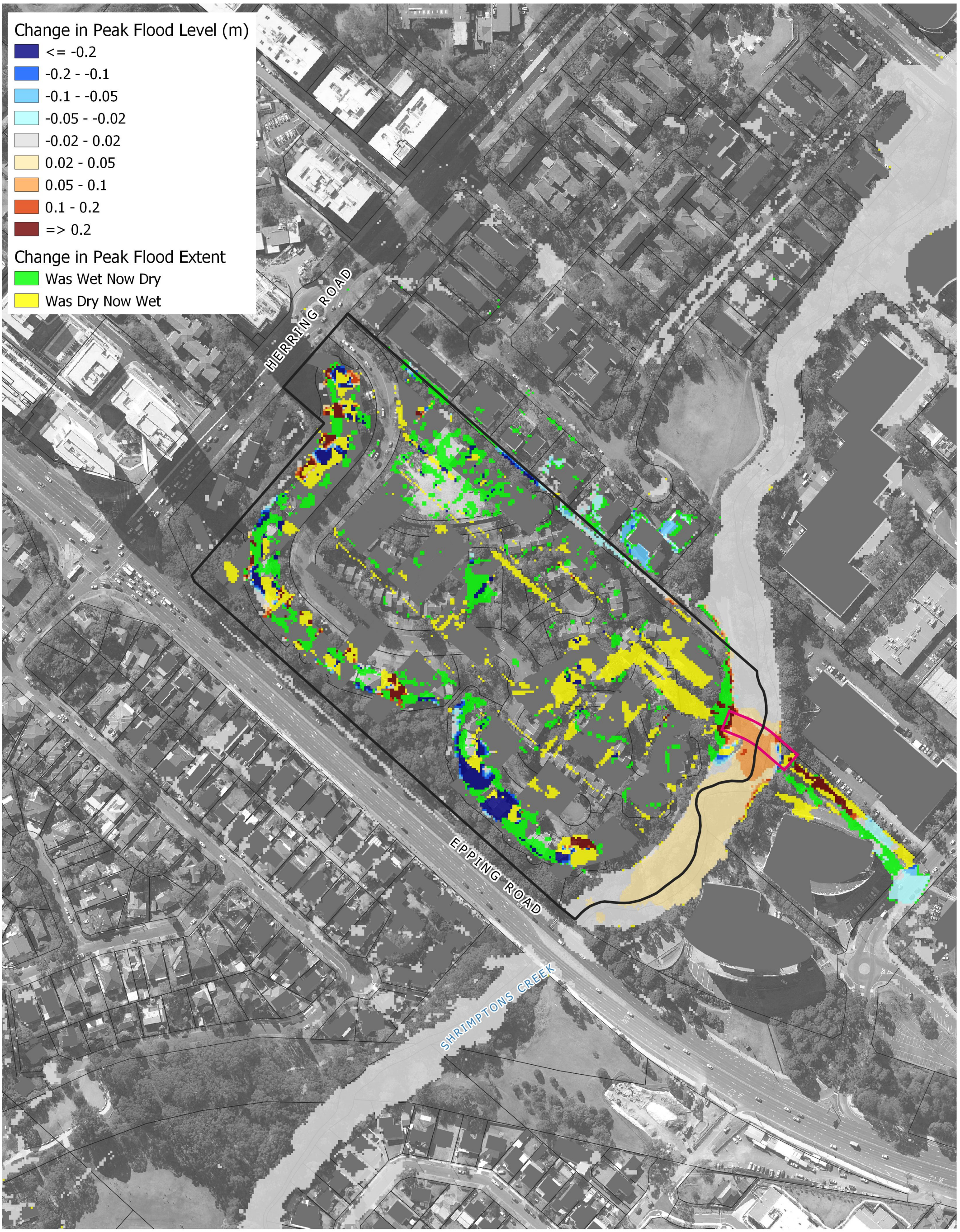

Legend

- Site Boundary
- Proposed Bridge

Title:

Change in Peak Flood Level - 2% AEP Event Blocked Scenario

Drawing: **C-4**

Rev: **A**

BMT endeavours to ensure that the information provided in this map is correct at the time of publication. BMT does not warrant, guarantee or make representations regarding the currency and accuracy of information contained in this map.

0 50 100 m

BMT
www.bmt.org

Filepath: S:\WATER\PROJECTS\A11013_Ivanhoe_Bridge_DD\QGIS\Figure_Generator_Project_Data_DevA\Project\A11013_DevA_Figures.qgz

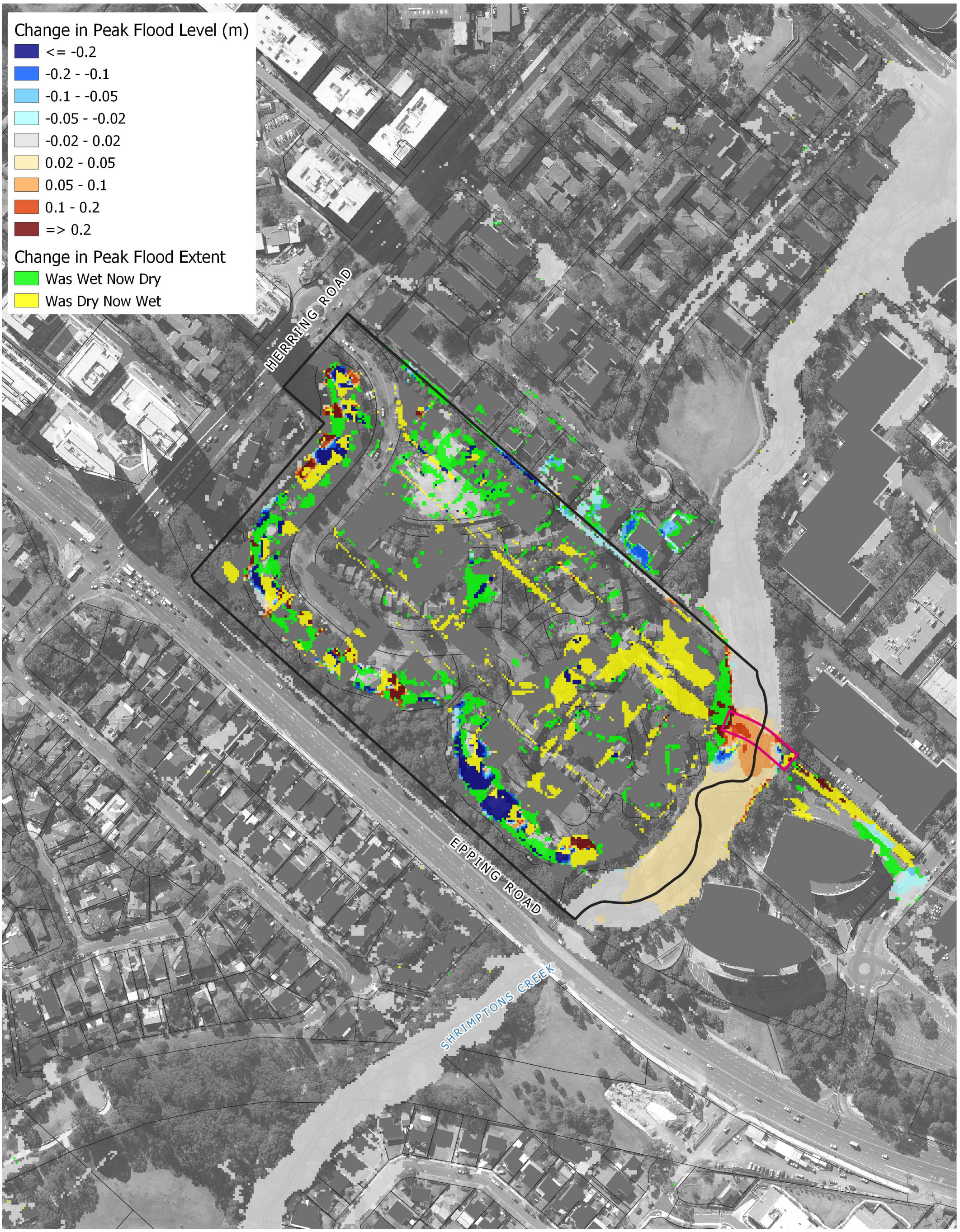

Legend

- Site Boundary
- Proposed Bridge

Title:

Change in Peak Flood Level - 1% AEP Event Unblocked Scenario

Drawing: **C-5**

Rev: **A**

BMT endeavours to ensure that the information provided in this map is correct at the time of publication. BMT does not warrant, guarantee or make representations regarding the currency and accuracy of information contained in this map.

0 50 100 m

BMT
www.bmt.org

Filepath: S:\WATER\PROJECTS\A11013_Ivanhoe_Bridge_DD\QGIS\Figure_Generator_Project_Data_DevA\Project\A11013_DevA_Figures.qgz

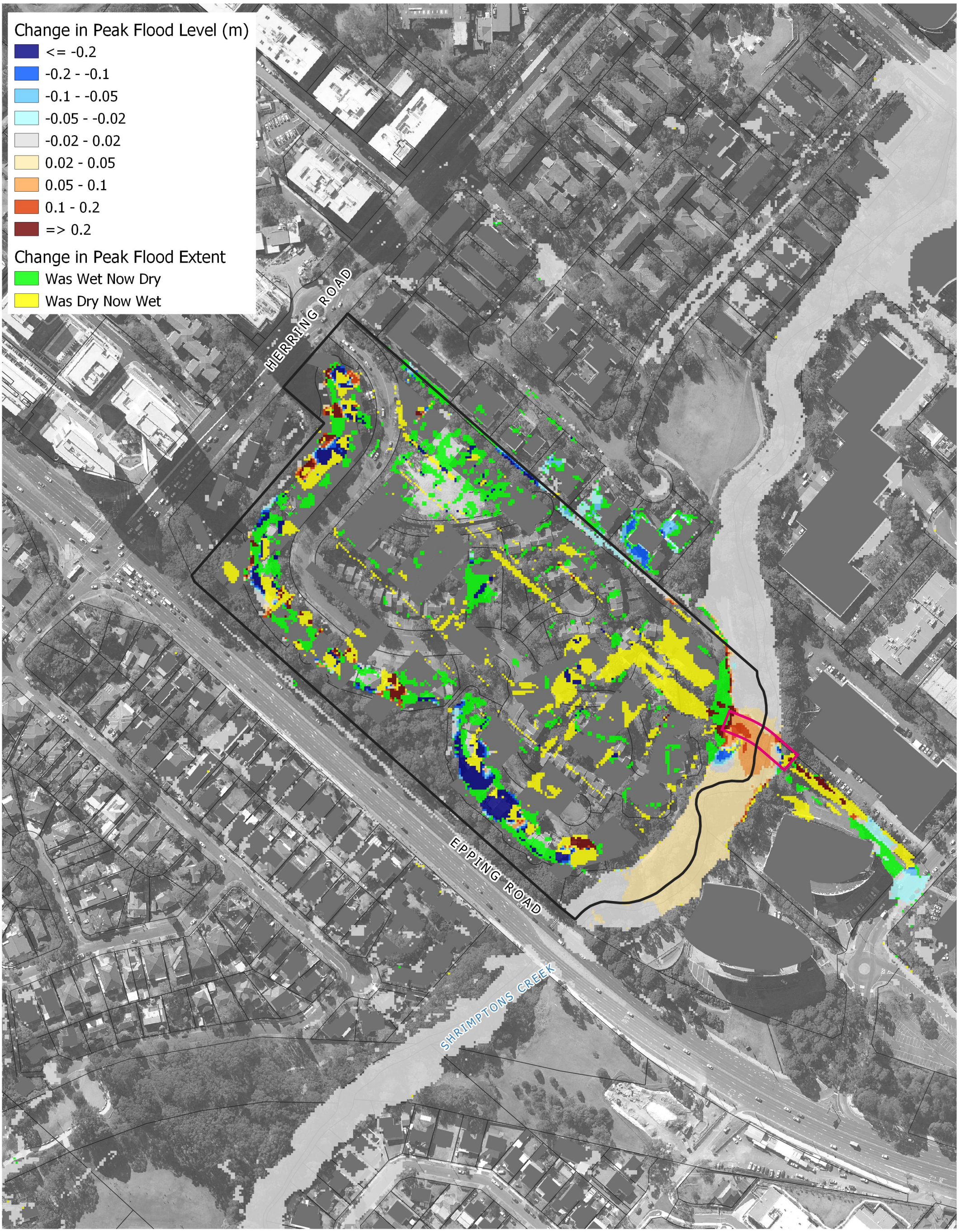

Legend

- Site Boundary
- Proposed Bridge

Title:

Change in Peak Flood Level - 1% AEP Event Blocked Scenario

Drawing: **C-6**

Rev: **A**

BMT endeavours to ensure that the information provided in this map is correct at the time of publication. BMT does not warrant, guarantee or make representations regarding the currency and accuracy of information contained in this map.

0 50 100 m

BMT
www.bmt.org

Filepath: S:\WATER\PROJECTS\A11013_Ivanhoe_Bridge_DD\QGIS\Figure_Generator_Project_Data_DevA\Project\A11013_DevA_Figures.qgz

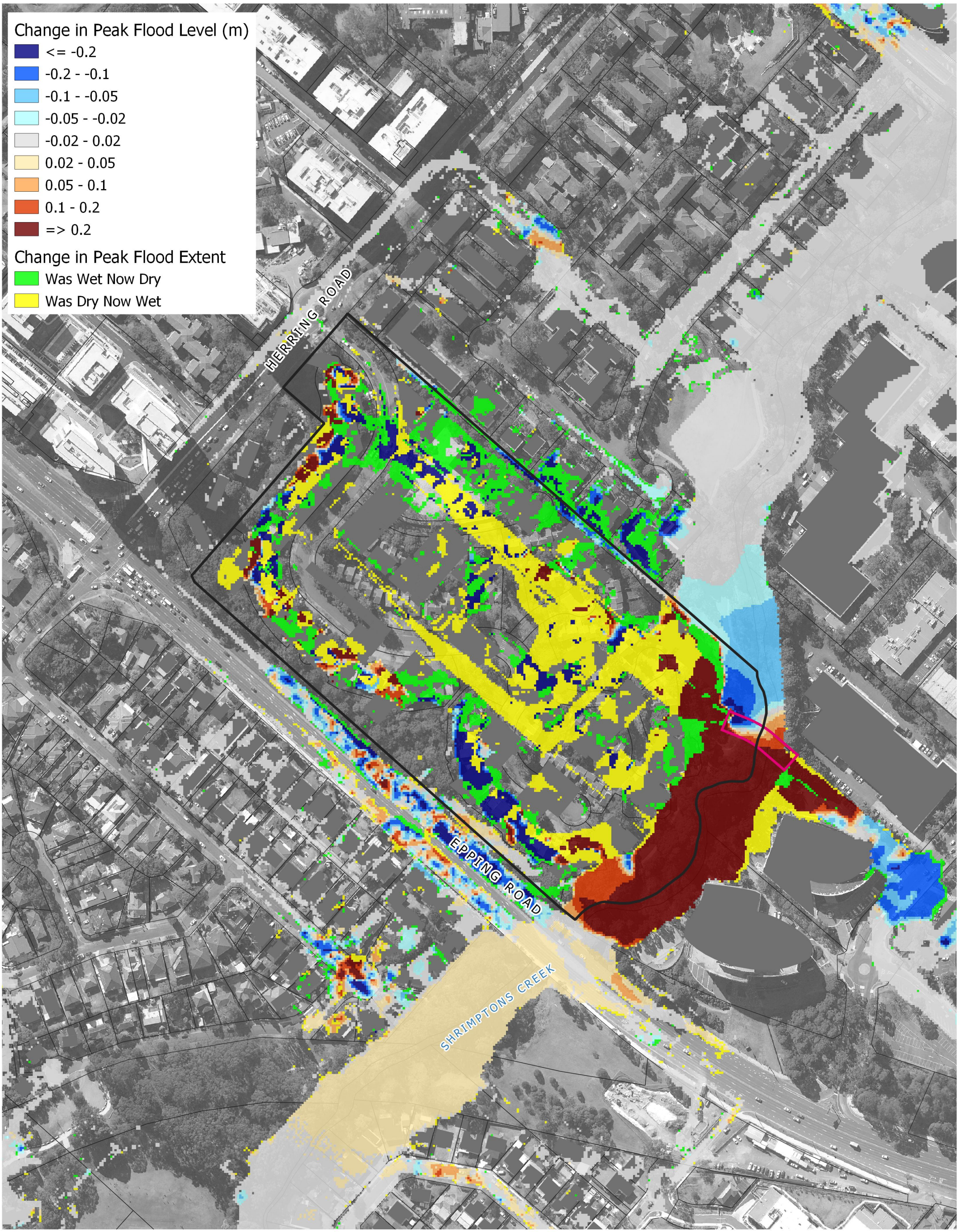

Legend

- Site Boundary
- Proposed Bridge

Title:

Change in Peak Flood Level - PMF Event Blocked Scenario

Drawing: **C-7**

Rev: **A**

BMT endeavours to ensure that the information provided in this map is correct at the time of publication. BMT does not warrant, guarantee or make representations regarding the currency and accuracy of information contained in this map.

0 50 100 m

BMT
www.bmt.org

Filepath: S:\WATER\PROJECTS\A11013_Ivanhoe_Bridge_DD\QGIS\Figure_Generator_Project_Data_DevA\Project\A11013_DevA_Figures.qgz

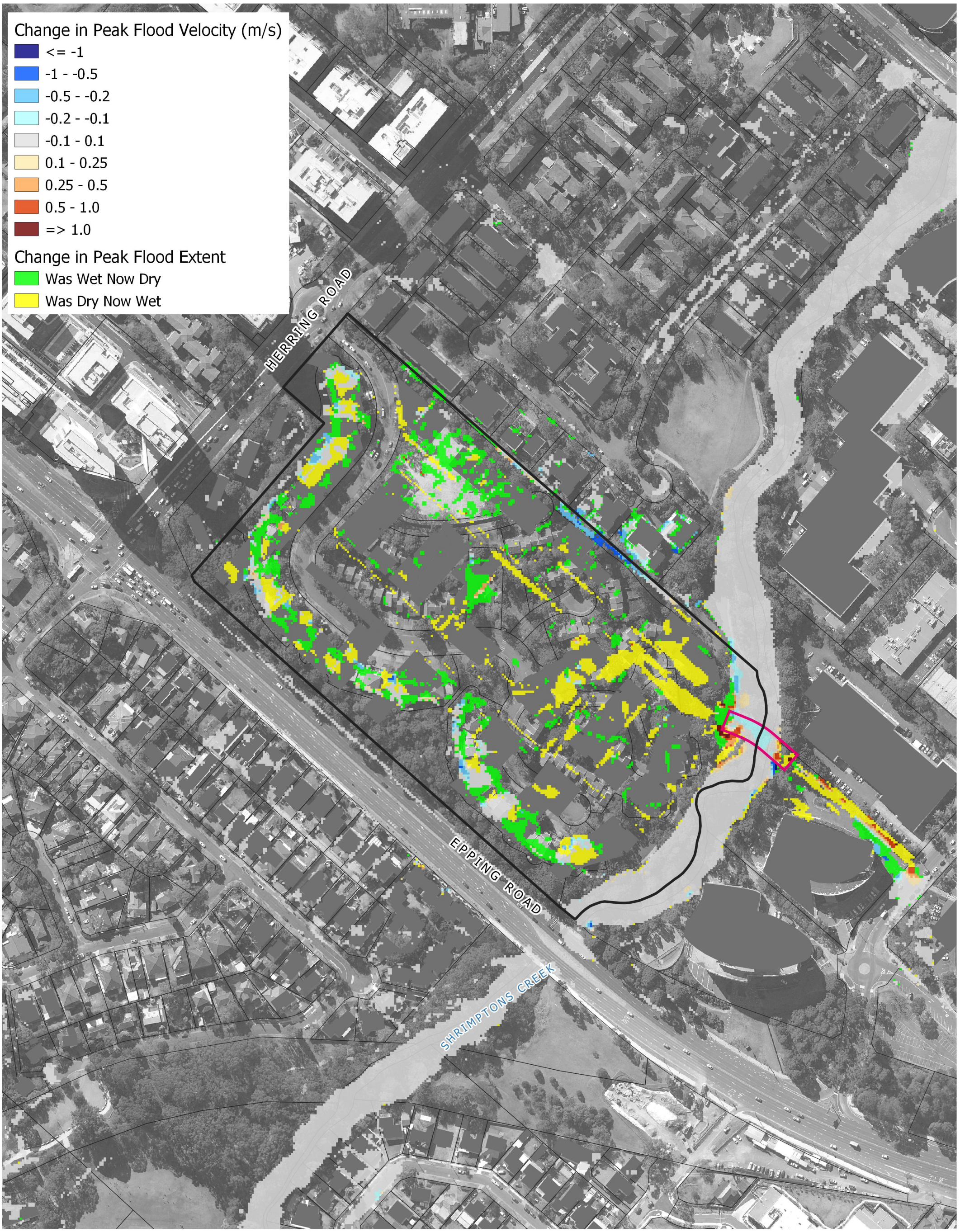

Legend

- Site Boundary
- Proposed Bridge

Title:

Change in Peak Flood Velocity - 5% AEP Event Unblocked Scenario

Drawing: **C-8**

Rev: **A**

BMT endeavours to ensure that the information provided in this map is correct at the time of publication. BMT does not warrant, guarantee or make representations regarding the currency and accuracy of information contained in this map.

0 50 100 m

BMT
www.bmt.org

Filepath: S:\WATER\PROJECTS\A11013_Ivanhoe_Bridge_DD\QGIS\Figure_Generator_Project_Data_DevA\Project\A11013_DevA_Figures.qgz

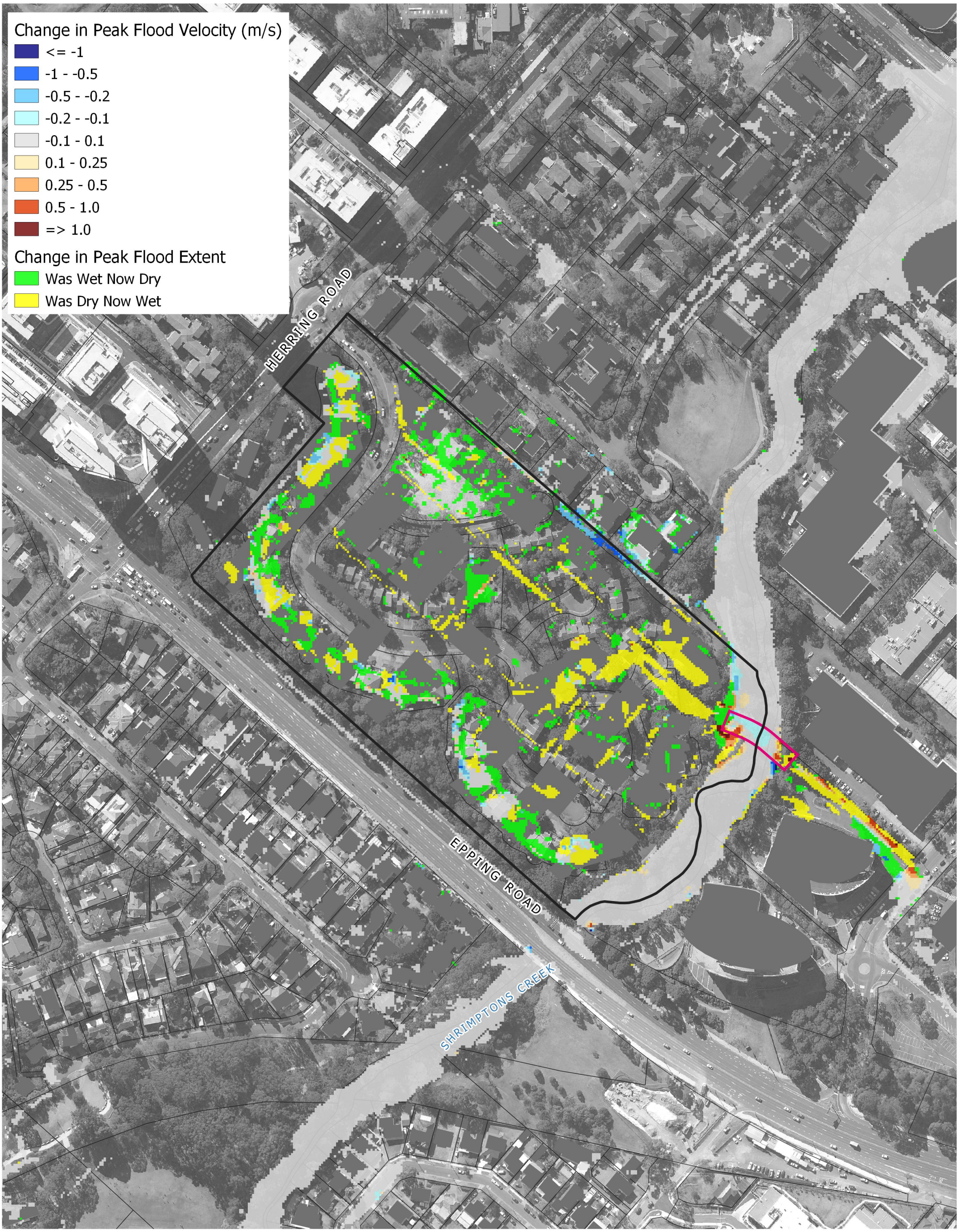

Legend

- Site Boundary
- Proposed Bridge

Title:

Change in Peak Flood Velocity - 5% AEP Event Blocked Scenario

Drawing: **C-9**

Rev: **A**

BMT endeavours to ensure that the information provided in this map is correct at the time of publication. BMT does not warrant, guarantee or make representations regarding the currency and accuracy of information contained in this map.

0 50 100 m

BMT
www.bmt.org

Filepath: S:\WATER\PROJECTS\A11013_Ivanhoe_Bridge_DD\QGIS\Figure_Generator_Project_Data_DevA\Project\A11013_DevA_Figures.qgz

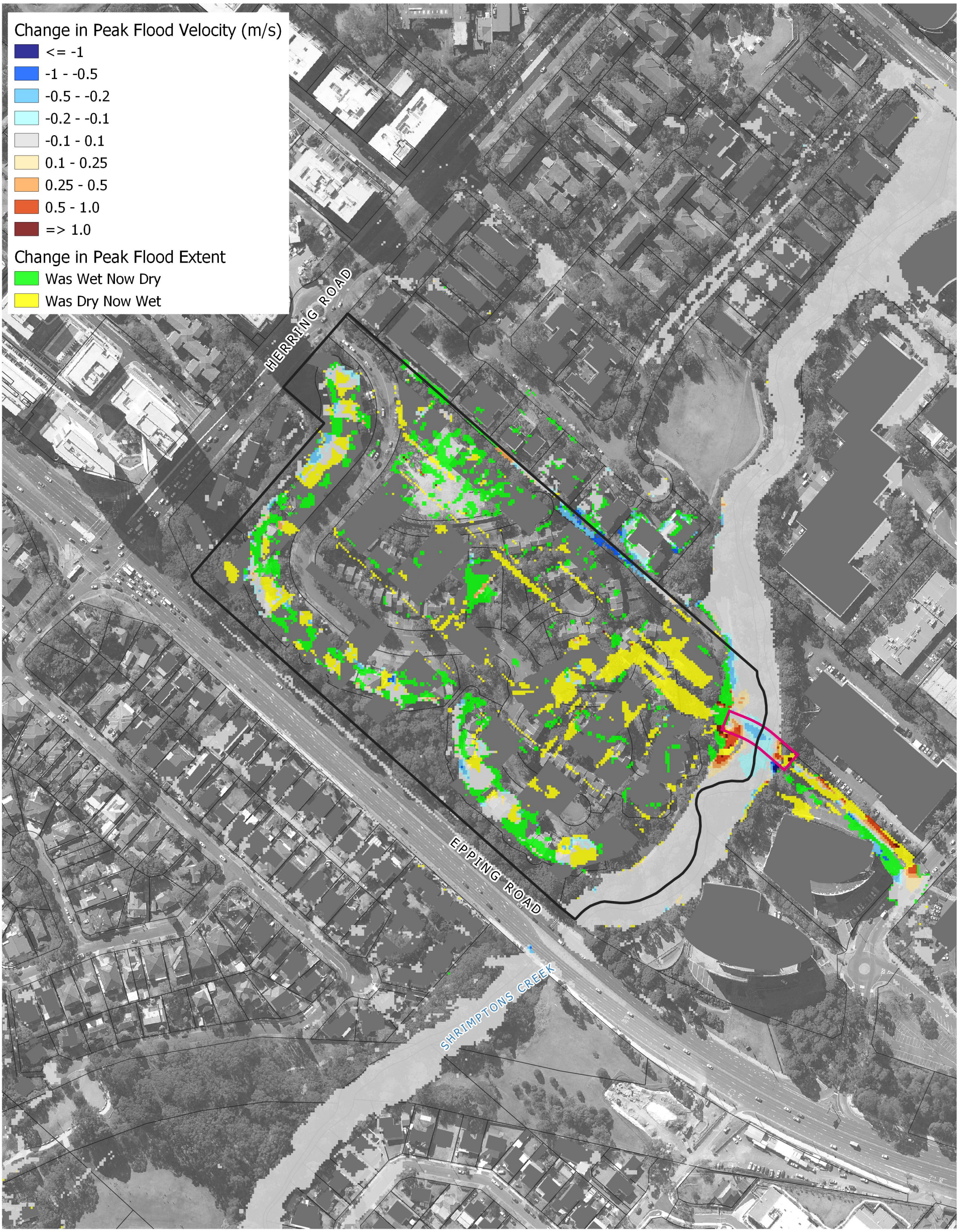

Legend

- Site Boundary
- Proposed Bridge

Title:

Change in Peak Flood Velocity - 2% AEP Event Unblocked Scenario

Drawing: **C-10**

Rev: **A**

BMT endeavours to ensure that the information provided in this map is correct at the time of publication. BMT does not warrant, guarantee or make representations regarding the currency and accuracy of information contained in this map.

0 50 100 m

BMT
www.bmt.org

Filepath: S:\WATER\PROJECTS\A11013_Ivanhoe_Bridge_DD\QGIS\Figure_Generator_Project_Data_DevA\Project\A11013_DevA_Figures.qgz

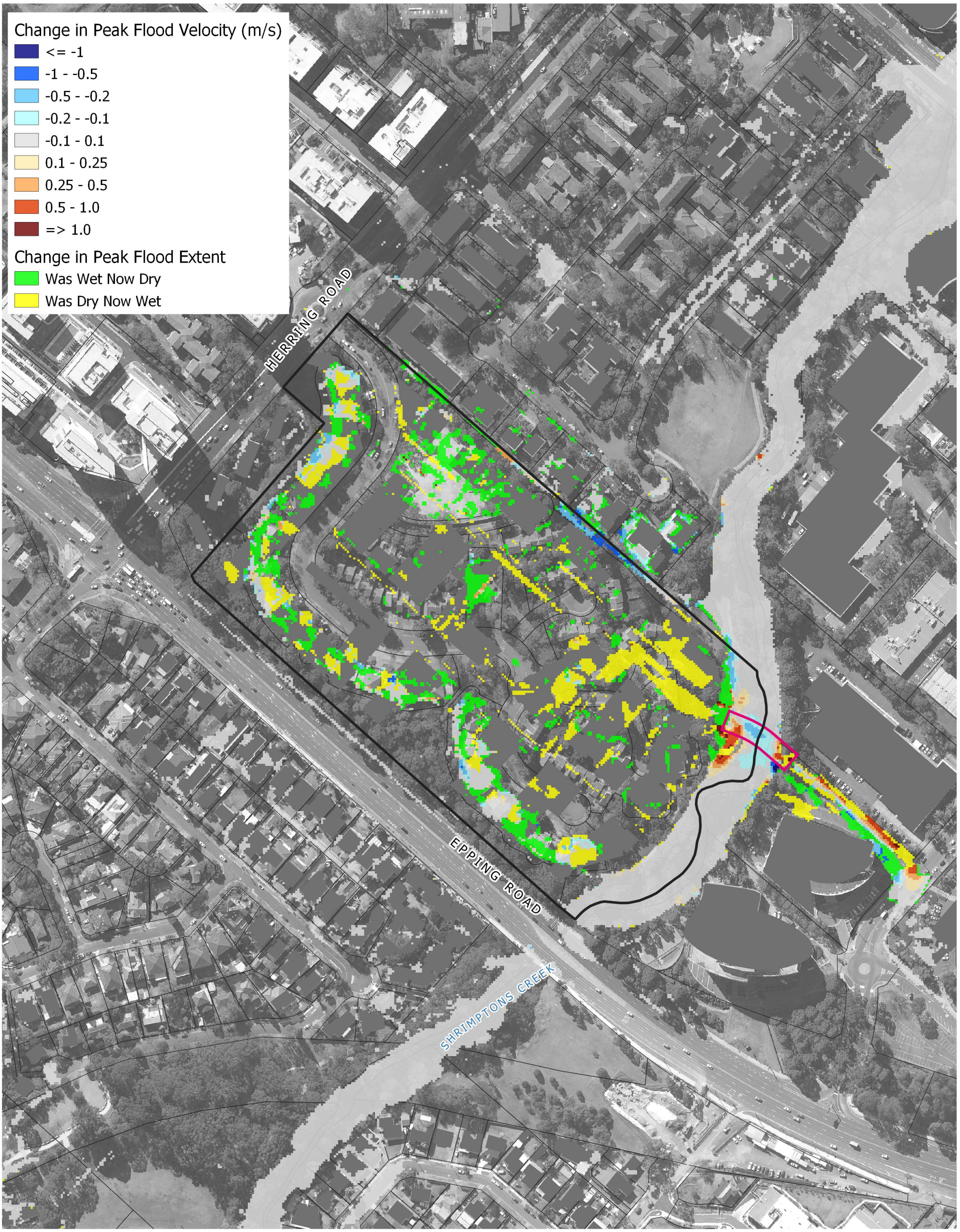

Legend

- Site Boundary
- Proposed Bridge

Title:

Change in Peak Flood Velocity - 2% AEP Event Blocked Scenario

Drawing: **C-11**

Rev: **A**

BMT endeavours to ensure that the information provided in this map is correct at the time of publication. BMT does not warrant, guarantee or make representations regarding the currency and accuracy of information contained in this map.

0 50 100 m

BMT
www.bmt.org

Filepath: S:\WATER\PROJECTS\A11013_Ivanhoe_Bridge_DD\QGIS\Figure_Generator_Project_Data_DevA\Project\A11013_DevA_Figures.qgz

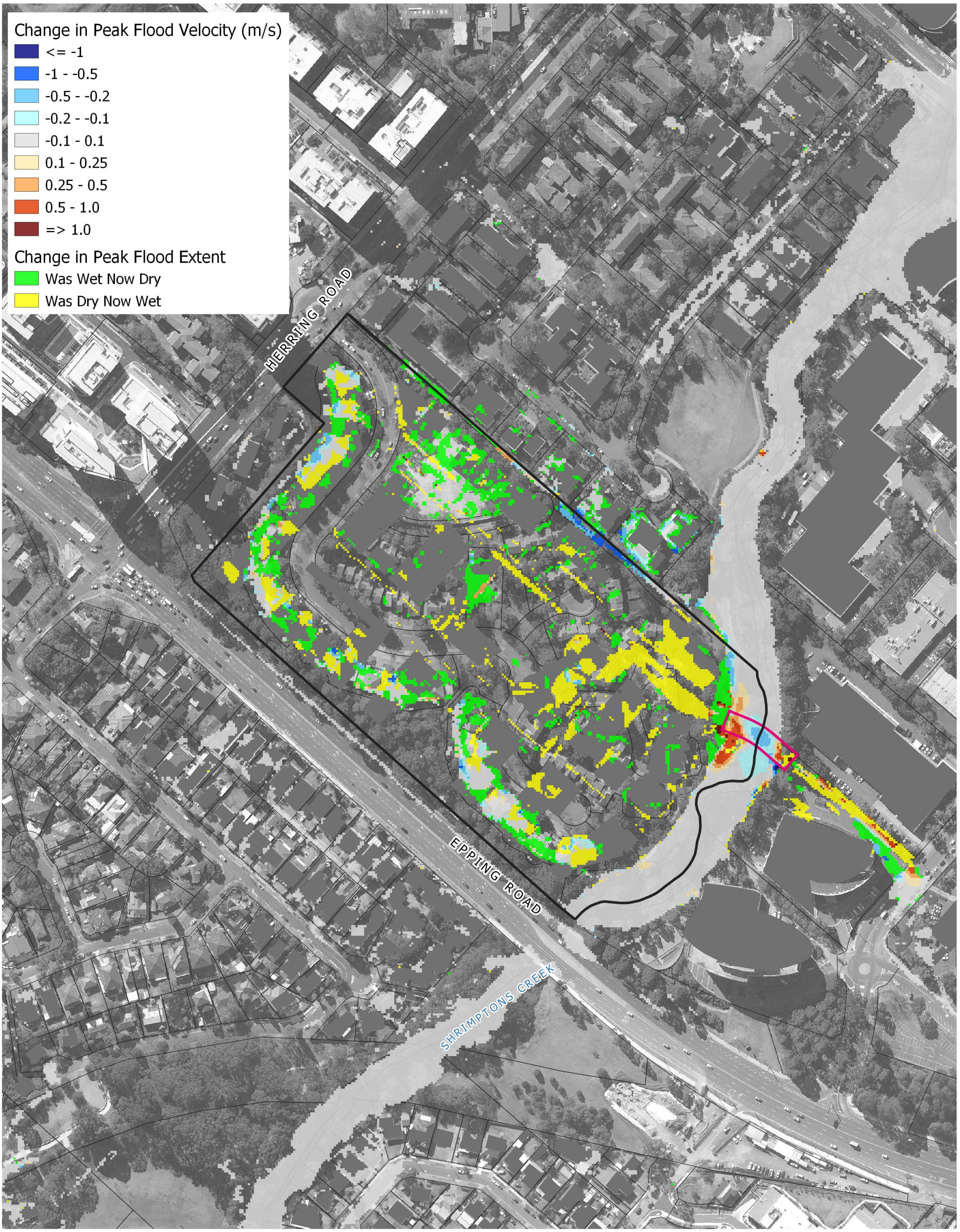

Legend

- Site Boundary
- Proposed Bridge

Title:

Change in Peak Flood Velocity - 1% AEP Event Unblocked Scenario

Drawing: **C-12**

Rev: **A**

BMT endeavours to ensure that the information provided in this map is correct at the time of publication. BMT does not warrant, guarantee or make representations regarding the currency and accuracy of information contained in this map.

0 50 100 m

BMT
www.bmt.org

Filepath: S:\WATER\PROJECTS\A11013_Ivanhoe_Bridge_DD\QGIS\Figure_Generator_Project_Data_DevA\Project\A11013_DevA_Figures.qgz

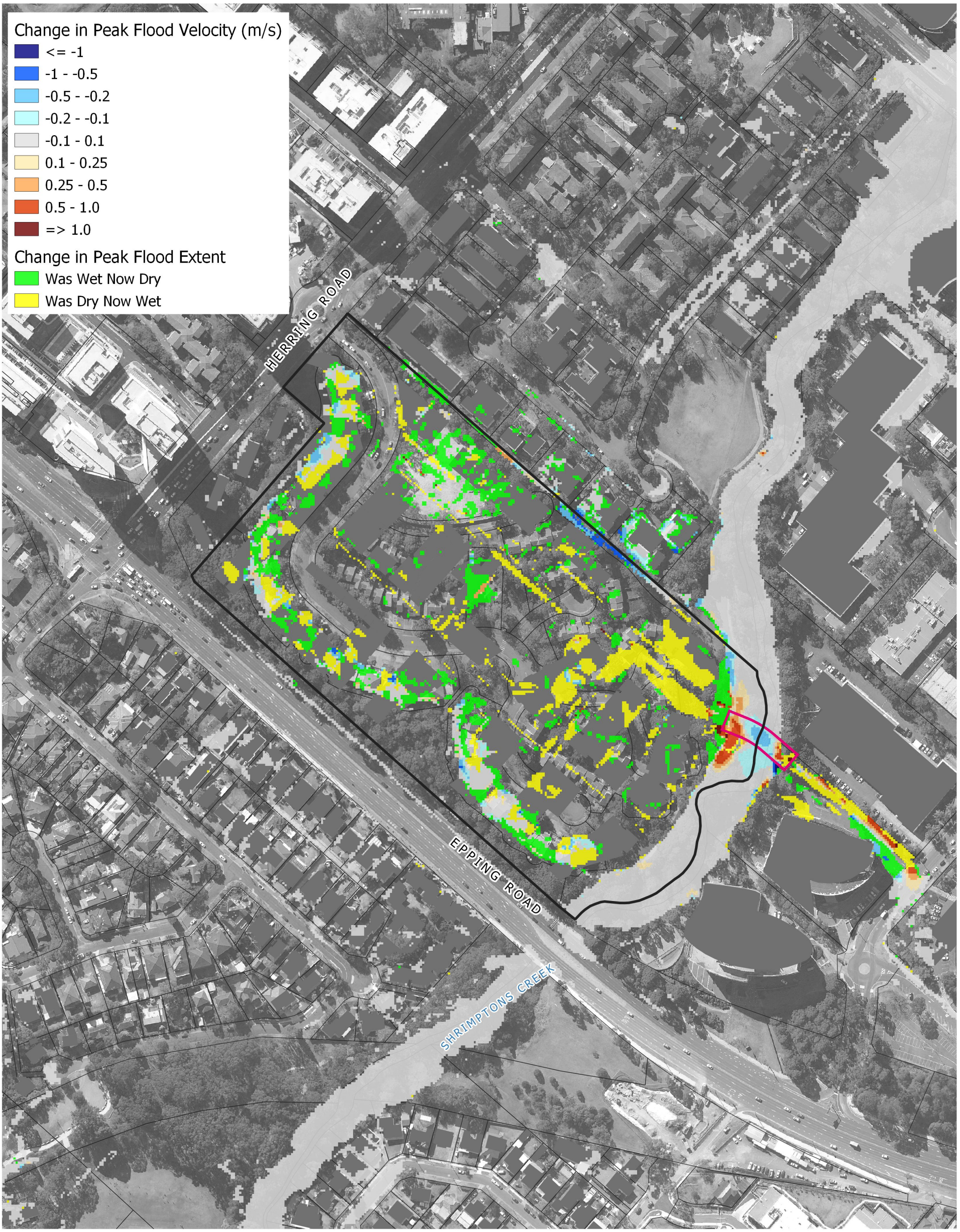

Legend

- Site Boundary
- Proposed Bridge

Title:

Change in Peak Flood Velocity - 1% AEP Event Blocked Scenario

Drawing: **C-13**

Rev: **A**

BMT endeavours to ensure that the information provided in this map is correct at the time of publication. BMT does not warrant, guarantee or make representations regarding the currency and accuracy of information contained in this map.

0 50 100 m

BMT
www.bmt.org

Filepath: S:\WATER\PROJECTS\A11013_Ivanhoe_Bridge_DD\QGIS\Figure_Generator_Project_Data_DevA\Project\A11013_DevA_Figures.qgz

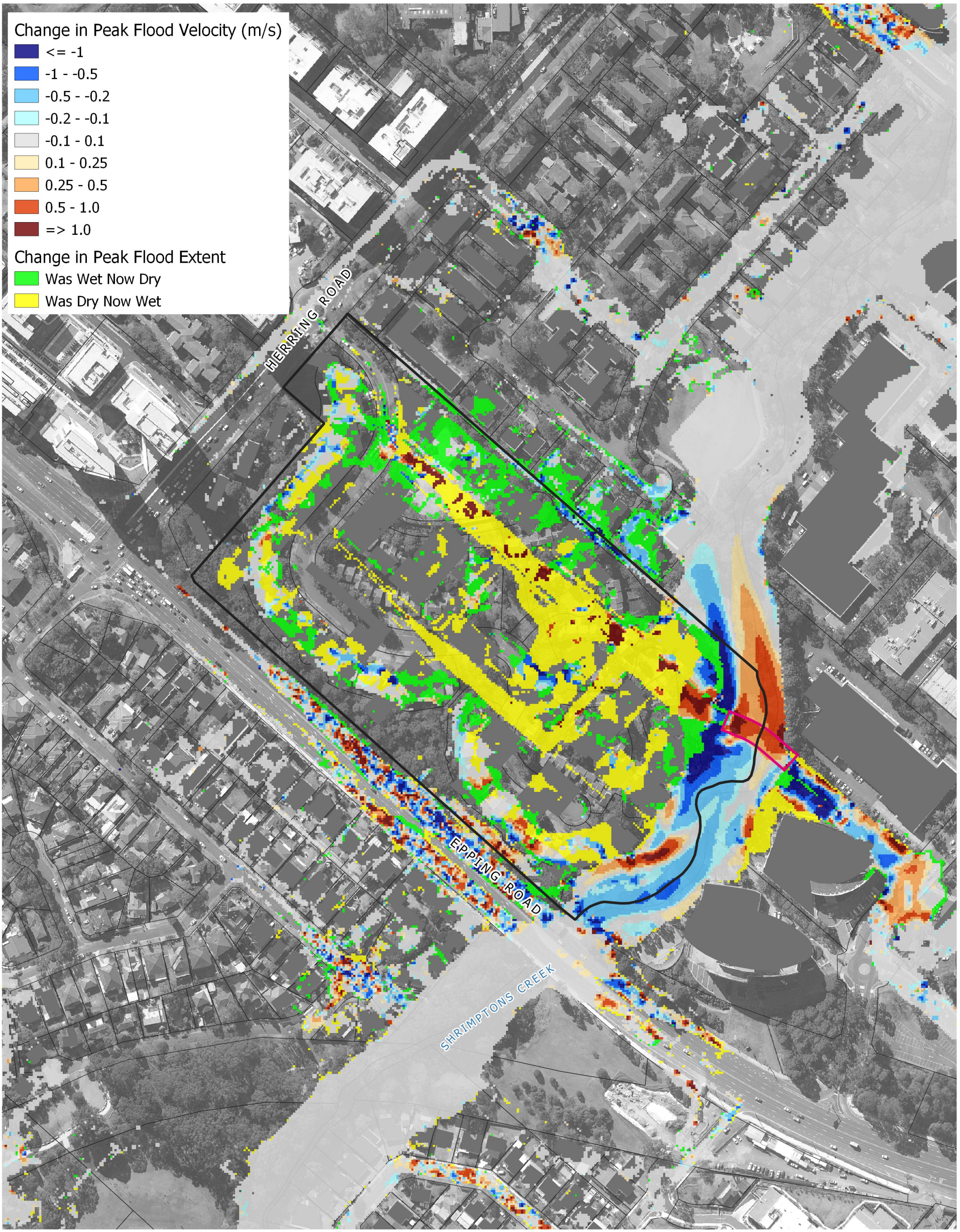

Legend

- Site Boundary
- Proposed Bridge

Title:

Change in Peak Flood Velocity - PMF Event Blocked Scenario

Drawing: **C-14**

Rev: **A**

BMT endeavours to ensure that the information provided in this map is correct at the time of publication. BMT does not warrant, guarantee or make representations regarding the currency and accuracy of information contained in this map.

0 50 100 m

BMT
www.bmt.org

Filepath: S:\WATER\PROJECTS\A11013_Ivanhoe_Bridge_DD\QGIS\Figure_Generator_Project_Data_DevA\Project\A11013_DevA_Figures.qgz

Appendix D Blockage Assessment

BLOCKAGE ASSESSMENT FORM ARR2016

STRUCTURE: **Proposed Shrimpton's Creek Bridge adjacent to Ivanhoe Estate**

OPENING WIDTH: **17.785m bridge span**

DEBRIS TYPE / MATERIAL / L_{10} / SOURCE AREA

Debris Type/Material	L_{10}	Source Area	How Assessed
Urban	1.5 m	Urban debris from nearby residential/commercial/roads	Aerial/Google Maps & Site Visit Photos
Floating	0.5 m	Tree branches and sticks falling into creek from trees adjacent	Aerial/Google Maps & Site Visit Photos
Non-floating	Sand and small rocks	From creek upstream	Aerial/Google Maps & Site Visit Photos

DEBRIS AVAILABILITY (HML) – *for the selected debris type/size and its source area*

Availability	Typical Source Area Characteristics	Notes
High	• *Dense forest, thick vegetation, extensive canopy, difficult to walk through with considerable fallen limbs, leaves and high levels of floor litter.* • *Streams with boulder/cobble beds and steep bed slopes and banks showing signs of substantial past bed/bank movements.* • *Arid areas, where loose vegetation and exposed loose soils occur and vegetation is sparse.* • *Urban areas that are not well maintained and/or old paling fences, sheds, cars and/or stored loose material etc., are present on the floodplain close to the water course.*	Urban: Trash found on site visit, minimal fencing to stop litter from entering watercourse Floating: Heavy trees and vegetation adjacent to the bridge
Medium	• *State forest areas with clear understory, grazing land with stands of trees* • *Source areas generally falling between the High and Low categories.*	
Low	• *Well maintained rural lands and paddocks, with minimal outbuildings* • *Streams with moderate to flat slopes and stable beds and banks.* • *Arid areas where vegetation is deep rooted and soils resistant to scour* • *Urban areas that are well maintained with limited debris present in the source area.*	Non-floating: Stable creek bed and bank

DEBRIS MOBILITY (HML) - *for the selected debris type/size and its source area*

Mobility	Typical Source Area Characteristics	Notes
High	• *Steep source area with fast response times and high annual rainfall and/or storm intensities and/or source areas subject to high rainfall intensities with sparse vegetation cover.* • *Receiving streams that frequently overtop their banks.* • *Main debris source areas close to streams*	
Medium	• *Source areas generally falling between the High and Low categories.*	Urban: fast urban catchment response, good vegetation cover Floating: fast urban catchment response, good vegetation cover

		Non-floating: fast urban catchment response, good vegetation cover
Low	• *Low rainfall intensities and large, flat source areas.* • *Receiving streams that Infrequently overtop their banks.* • *Main source areas well away from streams*	

DEBRIS TRANSPORTABILITY (HML) - *for the selected debris type/size and stream characteristics*

Transportability	Typical Transporting Stream Characteristics	Notes
High	• *Steep bed slopes (> 3%).and/or high stream velocity (V>2.5m/sec)* • *Deep stream relative to vertical debris dimension (D>0.5L_{10})* • *Wide streams relative to horizontal debris dimension. (W>L_{10})* • *Streams relatively straight and free of constrictions/snag points.* • *High temporal variability in maximum stream flows*	
Medium	• *Streams generally falling between High and Low categories*	Urban: Relative flat creek at 0.5% which is deep and wide with typical velocity between 1-2m/s Floating: Relative flat creek at 0.5% which is deep and wide with typical velocity between 1-2m/s Non-floating: Relative flat creek at 0.5% which is deep and wide with typical velocity between 1-2m/s
Low	• *Flat bed slopes (< 1%).and/or low stream velocity (V<1m/sec)* • *Shallow stream relative to vertical debris dimension (D<0.5L10)* • *Narrow streams relative to horizontal debris dimension. (W<L10)* • *Streams meander with frequent constrictions/snag points.* • *Low temporal variability in maximum stream flows*	

SITE BASED DEBRIS POTENTIAL 1%AEP (HML) - *for the selected debris type/size arriving at the site*

Debris Potential	Combinations of the Above (any order)	Notes
High	*HHH or HHM*	
Medium	*MMM or HML or HMM or HLL*	HMM HMM
Low	*LLL or MML or MLL*	LMM

AEP ADJUSTED SITE DEBRIS POTENTIAL (HML) - *for the selected debris type/size*

Event AEP	At Site 1% AEP Debris Potential			AEP Adjusted at Site Debris Potential		
	High	Medium	Low			
AEP > 5% (frequent)	*Medium*	*Low*	*Low*	Low	Low	Low
AEP 5% - AEP 0.5%	*High*	*Medium*	*Low*	Medium	Medium	Low
AEP < 0.5%	*High*	*High*	*Medium*	High	High	Medium

MOST LIKELY DESIGN INLET BLOCKAGE LEVEL (B_{DES}%) *for the selected debris type/size*

Control Dimension Inlet Width W (m)	At Site 1% AEP Debris Potential		
	High	Medium	Low
W < L_{10}	*100%*	*50%*	*25%*
W ≥ L_{10} ≤ $3L_{10}$	*20%*	*10%*	*0%*

Event AEP	Bdes% Urban
AEP > 5% (frequent)	*0%*
AEP 5% - AEP 0.5%	*0%*

W > $3L_{10}$	*10%*	*0%*	*0%*

AEP < 0.5%	*10%*

Note: W > $3L_{10}$

LIKELIHOOD OF SEDIMENT BEING DEPOSITED IN WATERWAY (HML)

Peak Velocity through Structure (m/s)	Particle Type				
	Clay/Silt	Sand	Gravel	Cobbles	Boulders
>= 3	*L*	*L*	*L*	*L*	*M*
1.0 to 3	*L*	*L*	*L*	*M*	*M*
0.5 to 1	*L*	*L*	*L*	*M*	*H*
0.1 to 0.5	*L*	*L*	*M*	*H*	*H*
< 0.1	*L*	*M*	*H*	*H*	*H*

MOST LIKELY DEPOSITIONAL BLOCKAGE LEVELS – B_{DES}%

Likelihood that deposition will occur	AEP Adjusted Debris Potential		
	High	Medium	Low
High	*100%*	*60%*	*25%*
Medium	*60%*	*40%*	*15%*
Low	*25%*	*15%*	*0%*

Event AEP	Bdes% Non-Floating
AEP > 5% (frequent)	*0%*
AEP 5% - AEP 0.5%	*0%*
AEP < 0.5%	*15%*

ESTIMATED BLOCKAGE LEVELS – B_{DES}%

Event AEP	Bdes% Urban	Bdes% Non-Floating	Bdes% Final
AEP > 5% (frequent)	*0%*	*0%*	*0%*
AEP 5% - AEP 0.5%	*0%*	*0%*	*0%*
AEP < 0.5%	*10%*	*15%*	*15%*

BMT has a proven record in addressing today's engineering and environmental issues.

Our dedication to developing innovative approaches and solutions enhances our ability to meet our client's most challenging needs.

BMT in Environment

Other BMT offices

Brisbane
Level 5, 348 Edward Street
Brisbane Queensland 4000
PO Box 203 Spring Hill Queensland 4004
Australia
Tel +61 7 3831 6744
Fax +61 7 3832 3627
Email environment@bmtglobal.com

Melbourne
Level 5, 99 King Street
Melbourne Victoria 3000
Australia
Tel +61 3 8620 6100
Fax +61 3 8620 6105
Email environment@bmtglobal.com

Newcastle
Level 1, 161 King Street
Newcastle New South Wales 2300
Tel +61 2 4940 8882
Fax +61 2 4940 8887
Email environment@bmtglobal.com

Adelaide
5 Hackney Road
Hackney Adelaide South Australia 5069
Australia
Tel +61 8 8614 3400
Email info@bmtdt.com.au

Northern Rivers
Suite 5
20 Byron Street
Bangalow New South Wales 2479
Australia
Tel +61 2 6687 0466
Fax +61 2 6687 0422
Email environment@bmtglobal.com

Sydney
Suite G2, 13-15 Smail Street
Ultimo Sydney New South Wales 2007
Australia
Tel +61 2 8960 7755
Fax +61 2 8960 7745
Email environment@bmtglobal.com

Perth
Level 4
20 Parkland Road
Osborne Park Western Australia 6017
PO Box 2305 Churchlands Western Australia 6018
Australia
Tel +61 8 6163 4900
Email environment@bmtglobal.com

London
Zig Zag Building, 70 Victoria Street
Westminster
London, SW1E 6SQ
UK
Tel +44 (0) 20 8090 1566
Email environment.uk@bmtglobal.com

Leeds
Platform
New Station Street
Leeds, LS1 4JB
UK
Tel: +44 (0) 113 328 2366
Email environment.uk@bmtglobal.com

Aberdeen
11 Bon Accord Crescent
Aberdeen, AB11 6DE
UK
Tel: +44 (0) 1224 414 200
Email environment.uk@bmtglobal.com

Asia Pacific
Indonesia Office
Perkantoran Hijau Arkadia
Tower C, P Floor
Jl: T.B. Simatupang Kav.88
Jakarta, 12520
Indonesia
Tel: +62 21 782 7639
Email asiapacific@bmtglobal.com

Arlington
2900 South Quincy Street, Suite 210
Arlington, VA 22206
United States
Tel: +1 703 920 7070
Email inquiries@dandp.com

BMT Commercial Australia Pty Ltd
Suite G2, 13-15 Smail Street
Ultimo, Sydney, NSW, 2007
Australia
PO Box 1181, Broadway NSW 2007

Tel: +61 2 8960 7755
Fax: +61 2 8960 7745

ABN 54 010 830 421

www.bmt.org

Our Ref: L.A11013.002.00.docx

6 August 2021

Frasers Property Australia
Level 2, 1C Homebush Bay Drive
Rhodes NSW 2138

Attention: Chris Koukoutaris
Email: chris.koukoutaris@fraserproperty.com.au

Dear Chris,

RE: FLOOD IMPACT ASSESSMENT OF THE PROPOSED PEDESTRIAN PATHWAY

This report letter provides a summary of the methodology and outcomes of the flood impact assessment of the proposed pedestrian pathway under the proposed bridge.

ADW Johnson Consulting Engineers provided a sketch showing the proposed alignment of the pathway on the western abutment under the bridge (in a south-north orientation) as shown in Image 1 below. The pathway berm is proposed have a design level of 43.9m AHD to provide a 5-Year ARI flood immunity. As a digital elevation model (DEM) of the pathway was not supplied, BMT represented the pathway in the flood model using a shape file and by raising the underlying 3m grid cells along the pathway to 43.9m AHD. For the assessment, the 5- and 100-year ARI flood events were simulated and assessed.

Image 1: Proposed Pedestrian Pathway Under the Bridge

The predicted peak flood depth and flood impact (afflux) maps have been produced as shown in Figures 1 to 3 of the Attachment enclosed with this report letter. The results are summarised as follows:

- The proposed pathway was predicted to have a 5-year ARI flood immunity; and
- The 1% AEP afflux was predicted to be similar to that of the 1% AEP afflux documented in the *Shrimptons Creek Proposed Bridge Detailed Design Flood and Scour Assessment* (BMT,2021). It is noted that the BMT 2021 assessed the impact of proposed bridge (without the proposed pathway) and demonstrated compliance with the SSDA approved flood conditions.

Based on the flood modelling results contained herein, the proposed pathway is not predicted to worsen the flooding conditions compared to the approved conditions.

We trust that this flood advice is adequate to address your requirements. Further information or clarification regarding any aspect of this advice can be obtained by contacting the undersigned.

Kind regards

Netsanet Shiferaw
Associate Principal Engineer
BMT

- **Attachment**: Figures 1 to 3

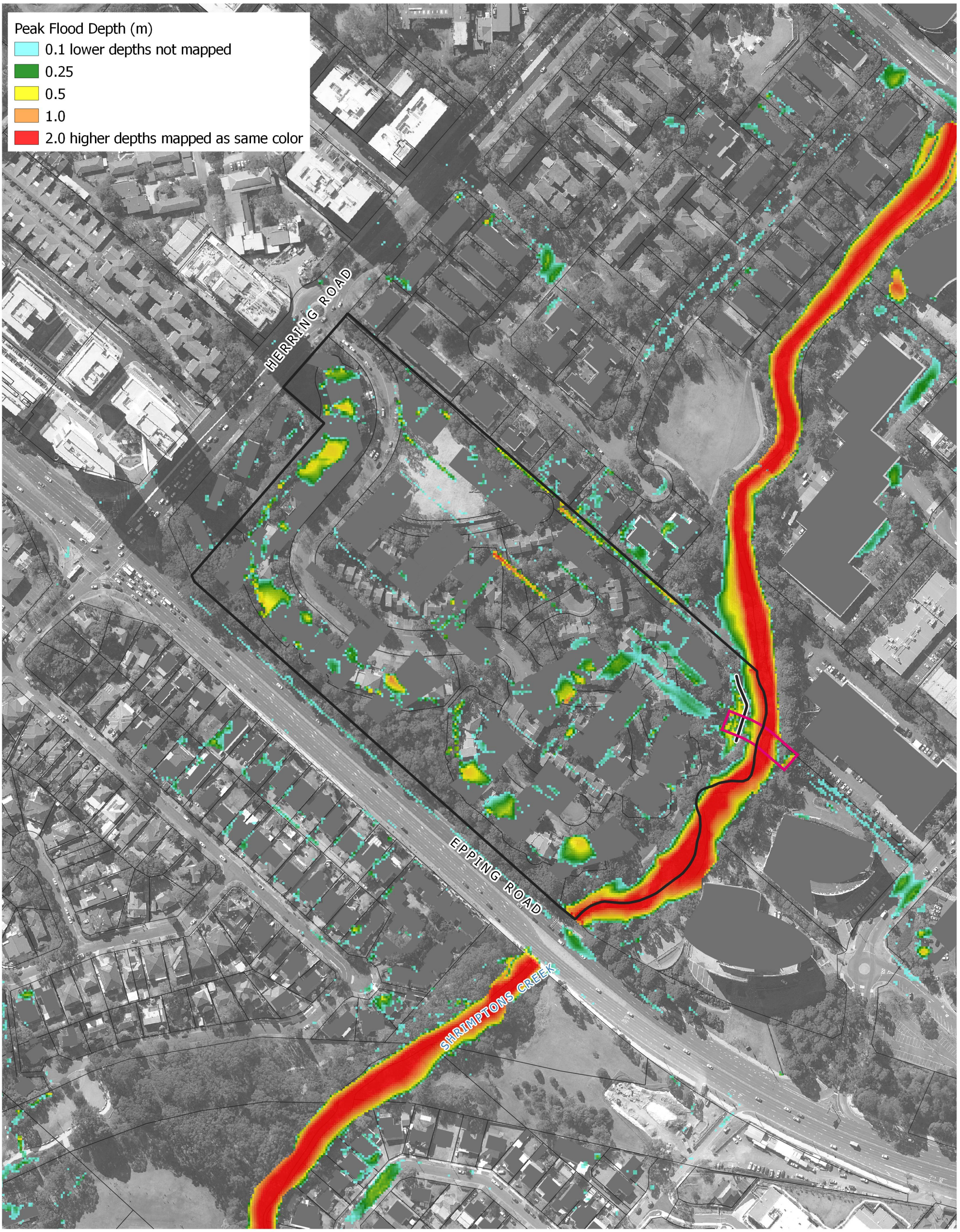

Legend

- Site Boundary
- Proposed Bridge
- Proposed Footpath

Title:

Peak Flood Depth - 5 Year Event
Footpath Raising Unblocked Scenario

Drawing: 1

Rev: A

BMT endeavours to ensure that the information provided in this map is correct at the time of publication. BMT does not warrant, guarantee or make representations regarding the currency and accuracy of information contained in this map.

0 50 100 m

BMT
www.bmt.org

Filepath: S:\WATER\PROJECTS\A11013_Ivanhoe_Bridge_DD\QGIS\Figure_Generator_Project_Data_210504\Project\A11013_Design_Figures.qgz

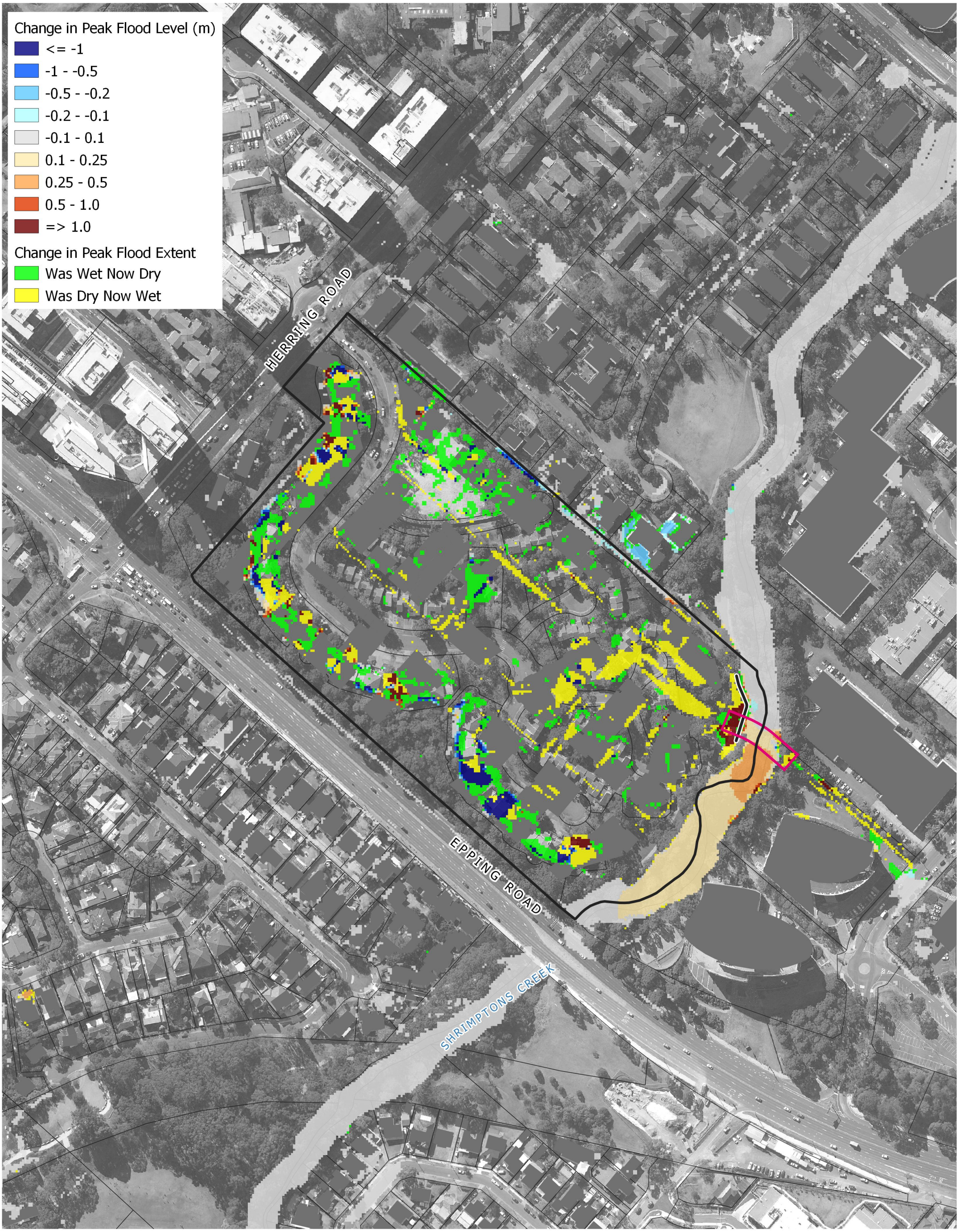

Legend

- Site Boundary
- Proposed Bridge
- Proposed Footpath

Title:

Change in Peak Flood Level - 5 Year Event
Footpath Raising Unblocked Scenario

Drawing: **2**

Rev: **A**

BMT endeavours to ensure that the information provided in this map is correct at the time of publication. BMT does not warrant, guarantee or make representations regarding the currency and accuracy of information contained in this map.

0 50 100 m

BMT
www.bmt.org

Filepath: S:\WATER\PROJECTS\A11013_Ivanhoe_Bridge_DD\QGIS\Figure_Generator_Project_Data_210504\Project\A11013_Design_Figures.qgz

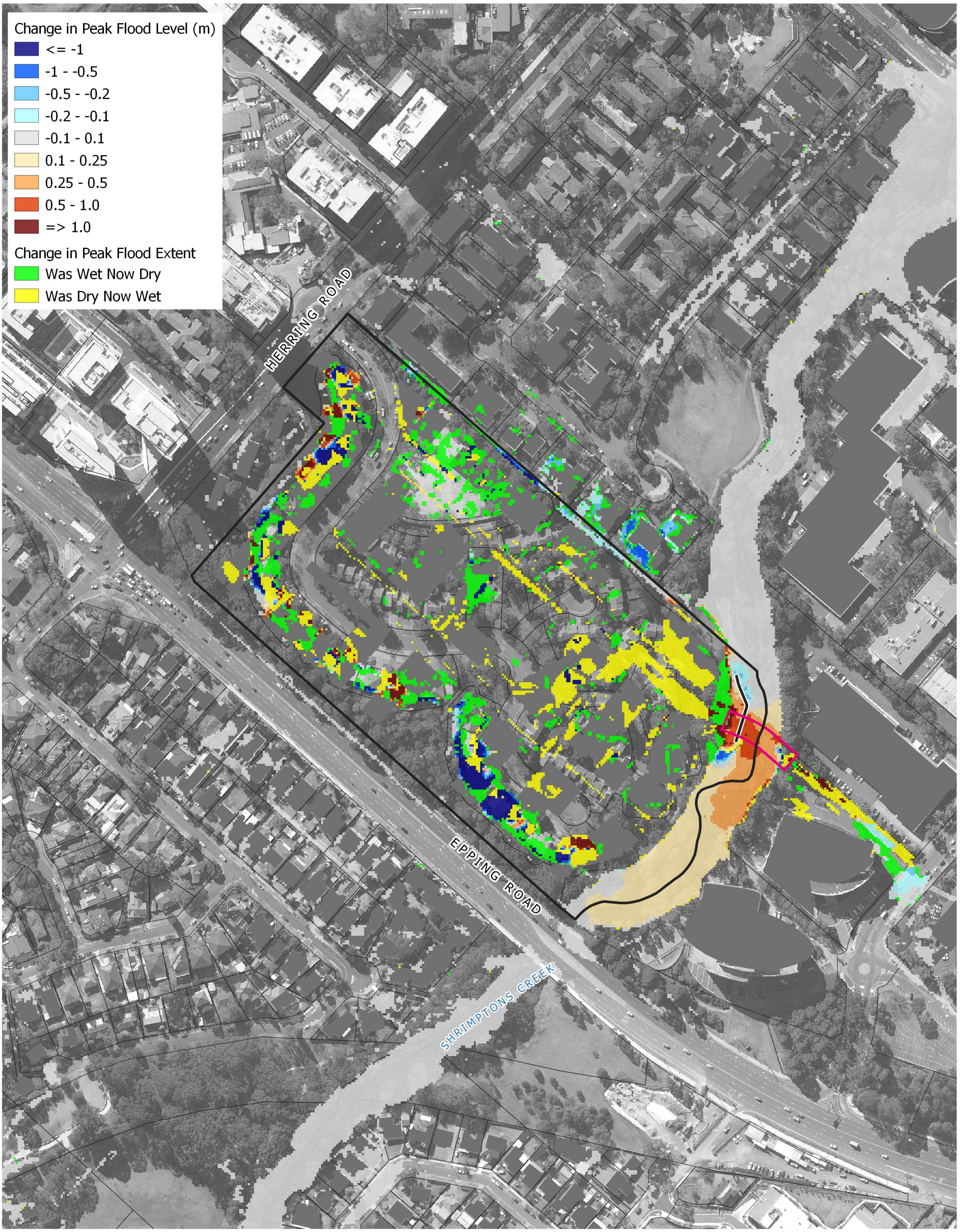

Legend

- Site Boundary
- Proposed Bridge
- Proposed Footpath

Title:

Change in Peak Flood Level - 1% AEP Event
Footpath Raising Unblocked Scenario

Drawing: 3

Rev: A

BMT endeavours to ensure that the information provided in this map is correct at the time of publication. BMT does not warrant, guarantee or make representations regarding the currency and accuracy of information contained in this map.

0 50 100 m

BMT
www.bmt.org

Filepath: S:\WATER\PROJECTS\A11013_Ivanhoe_Bridge_DD\QGIS\Figure_Generator_Project_Data_210504\Project\A11013_Design_Figures.qgz

Eric Hausfeld

From: Chris Koukoutaris <Chris.Koukoutaris@frasersproperty.com.au>
Sent: Wednesday, 28 July 2021 4:25 PM
To: Eric Hausfeld
Cc: Peter Statham; Stephen Peters; Anthony Payens
Subject: RE: Utilities Services
Attachments: AN-22381 - 20210428 - Design Amd 0 - CERTIFIED.pdf; NBN Design Stage 1B.pdf; Sewer Design.zip; Water design.zip

Hi Eric,

As discussed in our meeting please find attached the following approved Utility Services drawings for stage 1B

- Electrical
- Water
- NBN

Regarding sewer please find attached the major works agreement signed and the design which we are still awaiting approval.

Thanks

Chris Koukoutaris
Senior Development Manager
Frasers Property Australia

T +61 2 9767 2223 **M** +61 434 034 371
E Chris.Koukoutaris@frasersproperty.com.au
Level 2, 1C Homebush Bay Drive, Rhodes NSW 2138 Australia
www.frasersproperty.com.au | LinkedIn | YouTube

Eric Hausfeld

From: Chris Koukoutaris <Chris.Koukoutaris@frasersproperty.com.au>
Sent: Wednesday, 18 August 2021 4:14 PM
To: Eric Hausfeld
Cc: Peter Statham; Stephen Peters
Subject: FW: [#41/24958/1B] Ivanhoe Stage 3A (1B) Water Design Approval
Attachments: 189977-JobSpecificLetter.pdf; 41-24958-3A[2].pdf

Hi Eric,

Please find attached the approved water design and the job spec letter.

Please also refer email below stating approval.

Thanks

Chris Koukoutaris
Senior Development Manager
Frasers Property Australia

T +61 2 9767 2223 **M** +61 434 034 371
E Chris.Koukoutaris@frasersproperty.com.au
Level 2, 1C Homebush Bay Drive, Rhodes NSW 2138 Australia
www.frasersproperty.com.au | LinkedIn | YouTube

From: Libby Clarke <Libby.Clarke@rari.com.au>
Sent: Thursday, 22 July 2021 4:44 PM
To: Chris Koukoutaris <Chris.Koukoutaris@frasersproperty.com.au>
Cc: Glenn Roberts <glenn.roberts@rari.com.au>; Darren Blackwell <Darren.Blackwell@rari.com.au>
Subject: [#41/24958/1B] Ivanhoe Stage 3A (1B) Water Design Approval

EXTERNAL EMAIL: Do not click links or open attachments unless you recognise the sender and know the content is safe.

Hi Chris,

Please note the potable water design is approved for the above stage, attached is the approved plan and Job Specific Letter for your records.

Once you have selected a Sydney Water accredited constructor to complete the works please let me know as soon as possible as I will need to arrange for an ITP to be created and the constructor will have to sign a Deed Poll before they can start construction.

If you have any queries please don't hesitate to contact me.

A1

DEVELOPER CONTRACT PLAN

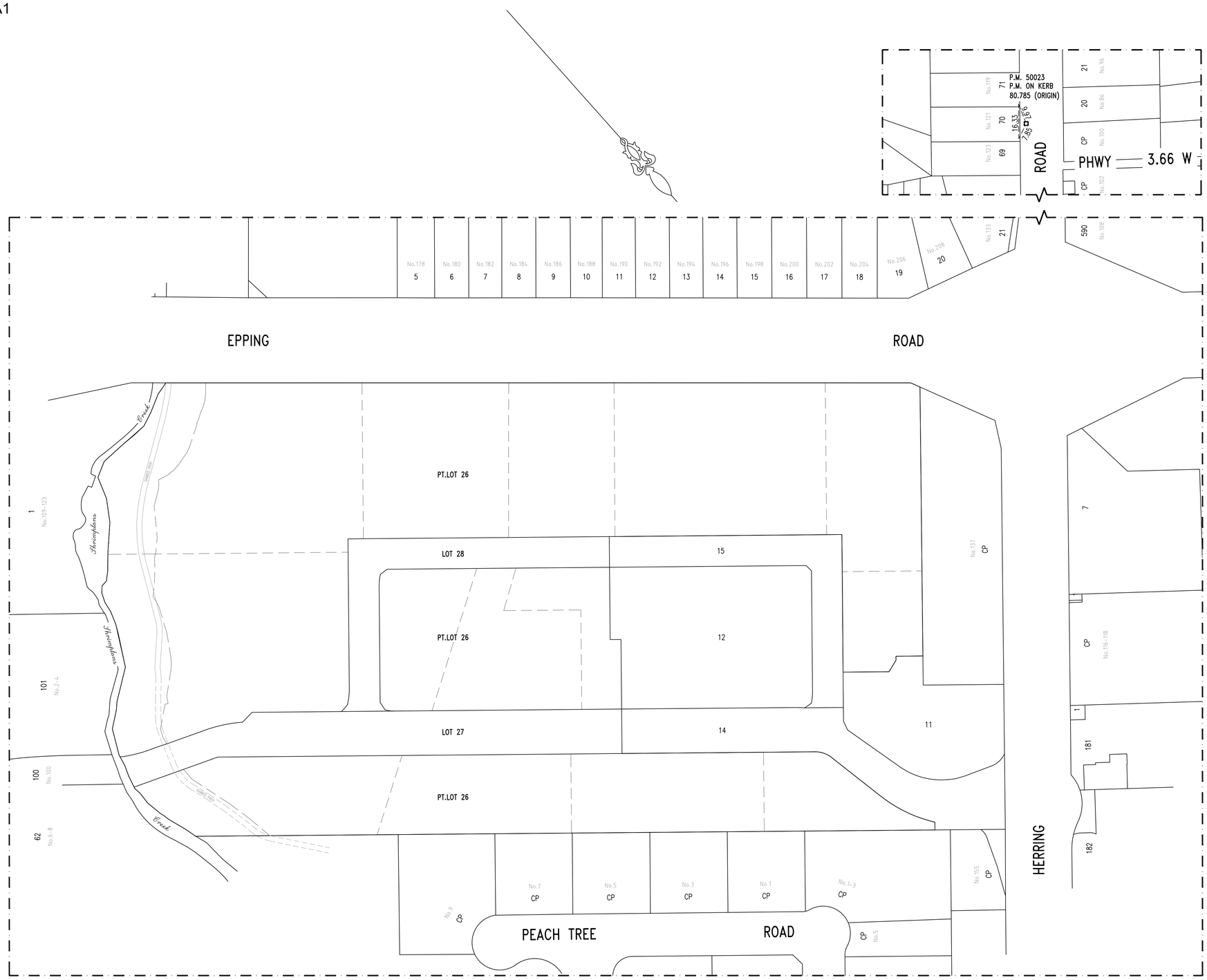

B.M. DIAGRAM & LOCALITY PLAN

(NOT TO SCALE)

0 10 20 30 40 50 METRES

NOTES :-

1 WATER SERVICING COORDINATOR: ROSE ATKINS RIMMER (INFRASTRUCTURE) Pty. Ltd.
142 SUNNYHOLT ROAD BLACKTOWN NSW 2148
Ph: (02) 9853 0200

DESIGN: ROSE ATKINS RIMMER (INFRASTRUCTURE) Pty. Ltd.
142 SUNNYHOLT ROAD BLACKTOWN NSW 2148
Ph: (02) 9853 0200

SURVEY: *ADW JOHNSON Pty. Ltd.*
5 PIONEER AVENUE TUGGERAH NSW 2259
Ph: (02) 4305 4300

FOR: *FRASERS PROPERTY AUSTRALIA*
SUITE 11 LEVEL 12 101 BATHURST STREET SYDNEY NSW 2000
Ph: (02) 9263 8888

2 ALL WORKS & MATERIALS ARE TO BE IN ACCORDANCE WITH THE SEWERAGE CODE OF AUSTRALIA WSA 02-2002-2.2 (SYDNEY WATER EDITION – Version 4).

3 ALL SERVICES SHOWN ARE INDICATIVE ONLY. A CURRENT SERVICES SEARCH & SITE CHECK OF ALL EXISTING SERVICES WILL BE REQUIRED PRIOR TO COMMENCEMENT OF ANY WORKS.

4 THE CONSTRUCTOR IS TO DETERMINE LEVELS & LOCATIONS OF SERVICES PRIOR TO CONSTRUCTION.

5 ALL LOTS WERE OCCUPIED AT TIME OF SURVEY.

6 ALL SURVEY MARKS ARE PEGS UNLESS OTHERWISE NOTED.

7 THE CONSTRUCTOR SHALL VERIFY ANY EXISTING INVERT LEVELS PRIOR TO CONSTRUCTION.

8 ROAD CROSSINGS & MAINS IN CARRIAGEWAYS SHALL HAVE COMPACTION OR STABILISED SAND (20:1 MIX) TRENCH BACKFILL TO SUB-GRADE LEVEL ONLY.

9 ALL STRUCTURES TO BE CONSTRUCTED TO PROPOSED FINISHED SURFACE LEVELS. THE CONSTRUCTOR IS TO LIAISE WITH THE SITE SUPERINTENDENT TO VERIFY ALL FINAL LEVELS.

10 PIPES TO BE CONCRETE ENCASED (SUPPORT TYPE 12u) SHOWN ACCORDINGLY:

11 PROPERTY CONNECTION SEWERS TO BE INSTALLED IN ACCORDANCE WITH SEW-1151-S.

12 ALL STRUCTURES TO BE IN ACCORDANCE WITH MAINTENANCE STRUCTURE SCHEDULE (SHEET 3). THE W.S.C. MUST BE INFORMED IN WRITING SHOULD THE CONSTRUCTOR CHOOSE TO USE A DIFFERENT STRUCTURE TO THAT SHOWN IN THE SCHEDULE. REFER NOTE 9.

13 SEWER ENDS NOT TO BE BACKFILLED UNTIL LOCATION & INVERT LEVEL HAVE BEEN OBSERVED & APPROVAL TO BACKFILL RECEIVED FROM THE W.S.C.

14 BUILDING OVER/ADJACENT TO SEWER. CONDITIONS APPLY. REFER TO TAP-IN.

15 EXISTING SEWERS TO BE DISUSED & BROKEN OUT DURING CONSTRUCTION (APPROX.);
36.5m OF DN225 V.C. ('A'-'B') 1981
13m OF DN150 V.C. ('B'-'F') 1987
48m OF DN150 V.C. ('G'-'F'-'H') 1987
163m OF DN225 V.C. ('B'-'C'-'D') 1987
67m OF DN150 V.C. ('C'-'I') 1987
55m OF DN300 u.P.V.C. ('D'-'E') 2021
203m OF DN225 V.C. ('J'-'K') 1987
EXISTING SEWER 'A'-'B'-'C'-'D' NOT TO BE DISUSED UNTIL CONNECTION OF TEMPORARY SEWER ON CN182217WW REDUNDANT PIPEWORK (INCLUDING PIPE EMBEDMENT) & STRUCTURES TO BE REMOVED FROM SITE. TRENCHES TO BE BACKFILLED & COMPACTED TO SYDNEY WATER STANDARDS.
ANY DISUSED ASSET WHICH REMAINS IN GROUND AND IS LOCATED WITHIN PRIVATE PROPERTY IS SUBJECT TO A DEED OF TRANSFER BEING COMPLETED.

16 ALL LEVELS ELECTRONICALLY GENERATED. NO LEVEL BOOK AVAILABLE.

17 CUSTOMER DRAIN CONNECTIONS CONSTRUCTED CONCURRENTLY WITH THE NEW SEWER MUST BE CONSTRUCTED BY A LICENSED PLUMBER. THE WORKS MUST BE INSTALLED IN ACCORDANCE WITH THE CURRENT NSW CODE OF PRACTICE FOR PLUMBING AND DRAINAGE AND AS/NZS3500. THE CUSTOMER DRAIN RISER MUST NOT EXTEND TO THE SURFACE. A MINIMUM OF 500mm COVER MUST BE MAINTAINED TO PROTECT THE RISER & JUNCTION FROM DAMAGE. THE CUSTOMER DRAIN CONNECTION MUST BE INSPECTED BY A N.S.W. FAIR TRADING PLUMBING INSPECTION ASSURANCE SERVICE (PIAS) OFFICER PRIOR TO BACKFILL.

18 THE MINIMUM NUMBER OF COMPACTION TESTS REQUIRED TO SATISFY THE SEWERAGE CODE OF AUSTRALIA (CLAUSE 22.3.4.4) ARE:

TRAFFICABLE:
PIPE EMBEDMENT ZONE: NIL TRENCH FILL ZONE: NIL *** SEE NOTE 8 ***

NON-TRAFFICABLE:
PIPE EMBEDMENT ZONE: NIL TRENCH FILL ZONE: 4 TESTS (1 TEST LOCATION, 1 TEST / 900mm LAYER)

MAINTENANCE STRUCTURES:
19 TESTS (1 TEST / 1m LAYER WITHIN 300mm OF EACH M.H. OR M.S.)

19 WATERSEALED INLET TO BE CONSTRUCTED IN ACCORDANCE WITH DETAILS PROVIDED SHEETS 4 – 6.

20 ◒ DENOTES BOUNDARY TRAP REQUIRED FOR CONNECTIONS TO CARRIER.
NO BOUNDARY TRAP REQUIRED FOR CONNECTIONS TO LINE 1 AND LINE 2.

21 TEMPORARY BYPASS OF THE EXISTING DN225 SEWER REQUIRED TO FACILITATE M.H. CONSTRUCTION. CHANGES IN DIRECTION TO BE ACHIEVED USING MAX. 45° BENDS. I.O. REQUIRED DOWNSTREAM OF EACH CHANGE IN DIRECTION.

PLAN DRAWN DATE: 7/7/21 VERSION: 03 SHEET 1 OF 7 SHEETS

No.	REVISION DESCRIPTION	BY	DATE
03	ORIGINAL ISSUE TO SYDNEY WATER	G.R.	7/7/21
02	ISSUE FOR TENDER	G.R.	28/6/21
01	INITIAL ISSUE FOR CLIENT REVIEW	D.P.	21/4/21

Ivanhoe Estate - Civil Works Stage 1B

PLAN TO BE READ IN CONJUNCTION WITH CURRENT SYDNEY WATER STANDARDS
SYDNEY WATER CORPORATION

PRIOR TO COMMENCEMENT OF EXCAVATION FOR PROPOSED AND EXISTING SERVICES CONTACT :-
DIAL BEFORE YOU DIG . . . . . Ph. 1100
ELECTRICITY . . . . . Ph.
GAS . . . . . Ph.
TELECOMMUNICATIONS . . . . . Ph.
GIVING AT LEAST 48 HOURS NOTICE.

UTILITIES

TYPE	DATE	REF.	TYPE	DATE	REF.
WATER: DN200 Water	3/03/20	HYDRA			
PROP WATER: DN200 Water	3/03/20	RAR			
AUSGRID: E	3/03/20	SURVEY			
TELSTRA: TEL	3/03/20	SURVEY			
NBN: NBN	3/03/20	SURVEY			
GAS: G(MP)	3/03/20	SURVEY			
STORMWATER: SWD	3/03/20	SURVEY			
PROP STORMWATER: SWD	3/03/20	SURVEY			

WORK AS CONSTRUCTED CERTIFICATION

DEVELOPER . . . . . .
WATER SERVICE CO-ORDINATOR . . . . . .
CONSTRUCTOR . . . . . .
COMPLETED . . . . . W.A.C. PREPARED . . . . . .

DESIGNER . . . . . .

I CERTIFY THAT THE WORKS HAVE BEEN CONSTRUCTED IN ACCORDANCE WITH THE WORK AS CONSTRUCTED DRAWINGS.

PIPE SCHEDULE

SIZE (DN)	TYPE	CLASS	LENGTH	PIPE JOINING METHOD / NOTES
300	u.P.V.C.	SN8	195.92	
225	u.P.V.C.	SN8	178.59	

DESIGN HEAD . . . m

◒ BOUNDARY TRAPS REQUIRED

GDA2020
AUSTRALIAN HEIGHT DATUM

SCALES
PLAN 1:500 SECTION HOR. 1:500 VERT. 1:125
CROSS SECTIONS . . . . NATURAL
LENGTHS, DEPTHS & LEVELS ARE IN METRES.

NO AMENDMENTS ARE TO BE MADE TO THIS PLAN WITHOUT REFERENCE TO SYDNEY WATER. THIS PLAN IS NOT NECESSARILY UP TO DATE OR CORRECT AND SYDNEY WATER ACCEPTS NO RESPONSIBILITY.

U.B. DIRECTORY MAP 193 P3-Q4 (Version 8 Digital)

SHEET 1 OF 7 File No. N/A

Sydney WATER SYDNEY WATER CORPORATION

Case No. 192226ww

CITY OF RYDE SEWERAGE
DRAINS TO
SHRIMPTONS CK. SUMB. SEC.2
N.S.O.O.S.

R.A.R. REFERENCE: 41-24958-3A *DESIGNED:* D.I.S./G.R. *DRAFTED:* G.R. *VERIFIED:* J.G. *REVIEWED:* D.I.S. *VARIATION ID:* *APPROVAL DATE:*

A1F

DEVELOPER CONTRACT PLAN

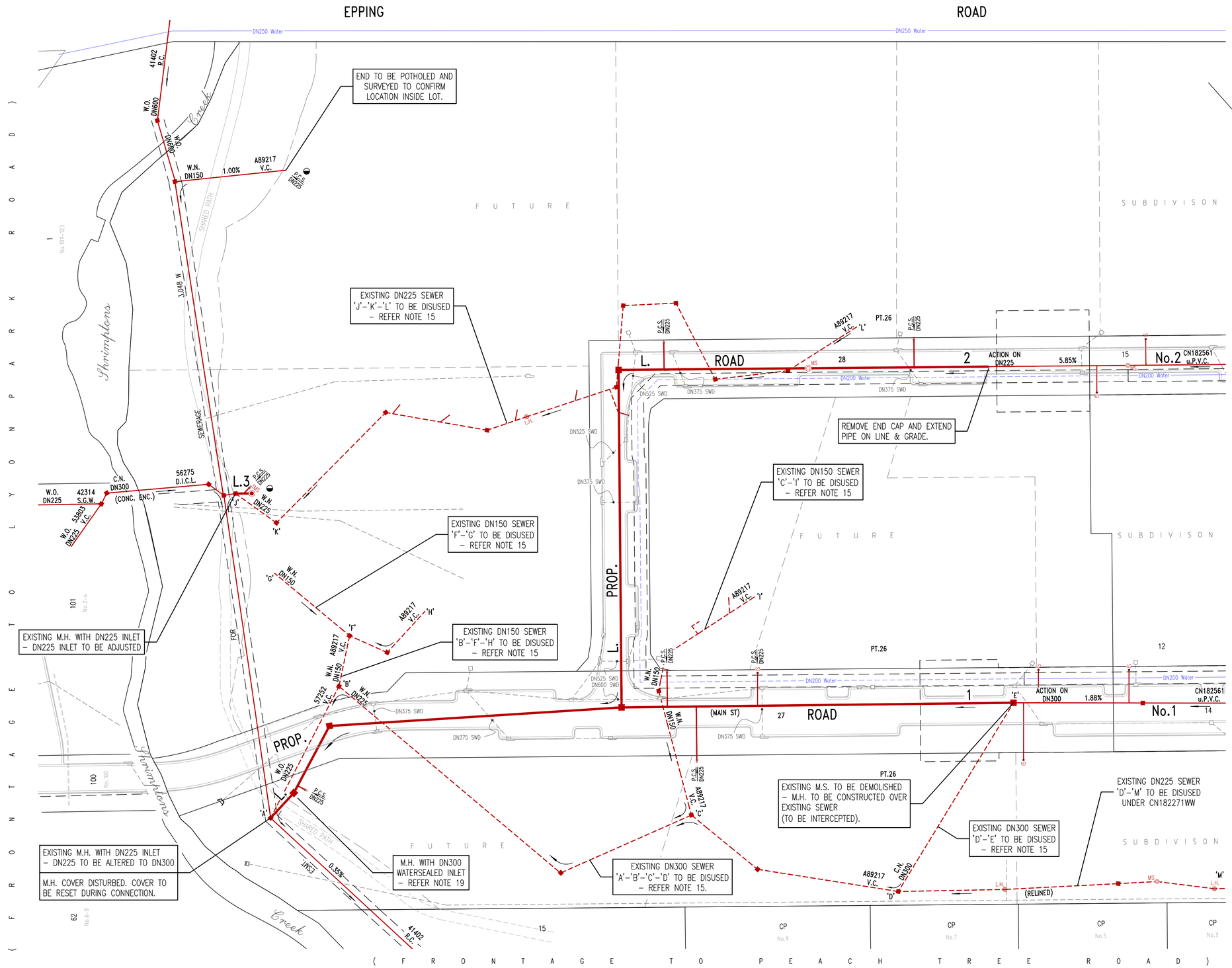

Ivanhoe Estate - Civil Works Stage 1B

WORK AS CONSTRUCTED CERTIFICATION	SYDNEY WATER CORPORATION
DEVELOPER	Sydney WATER
W.S.C.	
CONSTRUCTOR	Case No. 192226ww — SHT 2 OF 8 SHTS.
COMPLETED	
W.A.C. PREPARED	SYDNEY WATER CORPORATION
DESIGNER	FOR DETAILS OF SERVICES SEE SHEET 1
I CERTIFY THAT THE WORKS HAVE BEEN CONSTRUCTED IN ACCORDANCE WITH THE WORK AS CONSTRUCTED DRAWINGS	

PLAN DRAWN DATE: 7/7/21 VERSION: 03 SHEET 2 OF 7 SHEETS

R.A.R. REFERENCE: 41-24958-3A DESIGNED: D.I.S./G.R. DRAFTED: G.R. VERIFIED: J.G. REVIEWED: D.I.S. VARIATION ID: APPROVAL DATE:

A1F

DEVELOPER CONTRACT PLAN

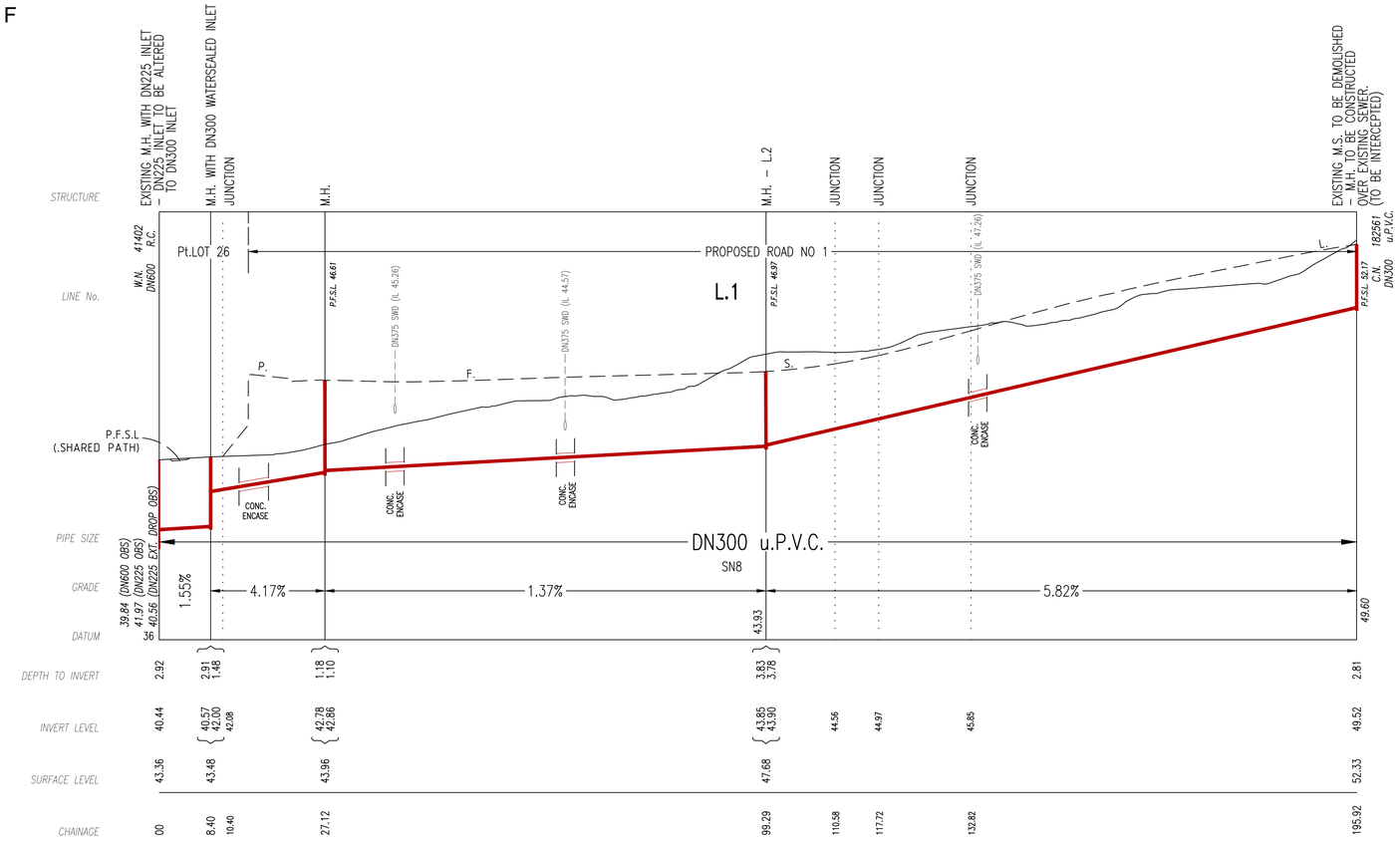

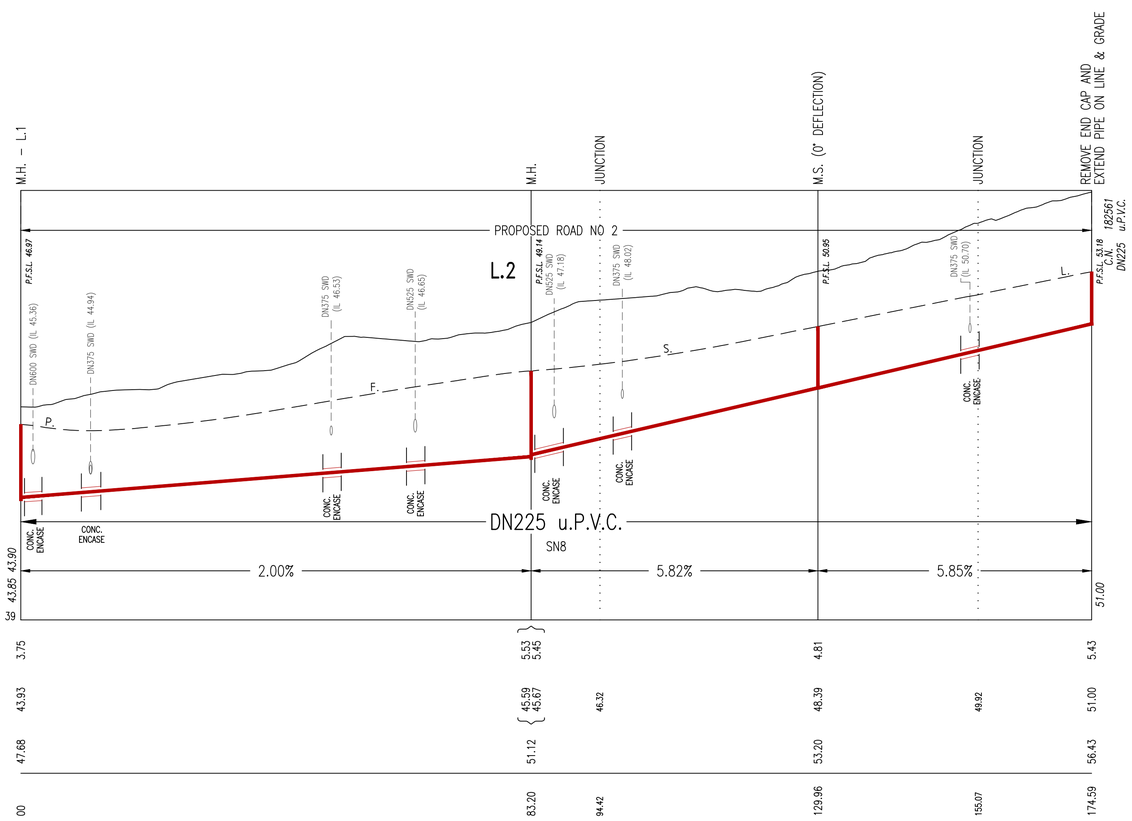

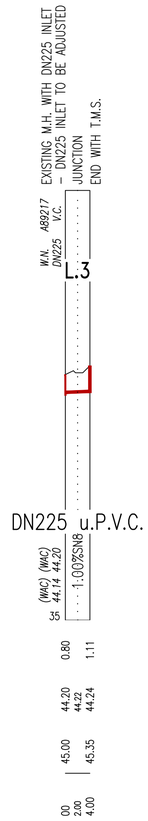

MAINTENANCE STRUCTURE SCHEDULE

(REFER NOTES 9 & 12)

LINE NO.	CHAINAGE	TYPE	DN RISER	CLASS OF COVER	MATERIAL	EASTING (MGA) (GDA2020)	NORTHING (MGA) (GDA2020)	COMMENTS
1	8.40	MH	1200	D	CAST IN-SITU	325770.14	6260348.64	DN300 WATERSEALED INLET - REFER DETAIL 'AA1' & NOTE 19
1	27.12	MH	1200	D	CAST IN-SITU	325752.58	6260342.16	DTC-2200[F] (18/03/15)
1	99.29	MH	1200	D	CAST IN-SITU	325695.76	6260386.67	DTC-2200[F] (18/03/15)
1	195.92	MH	1200	D	CAST IN-SITU	325622.85	6260450.08	DTC-2200[F] (18/03/15)
2	83.20	MH	1200	D	CAST IN-SITU	325640.98	6260324.05	DTC-2200[F] (18/03/15)
2	129.96	MS	225	D	PVC-U	325605.79	6260354.84	M.S. WITH NO CROSSFALL
3	4.00	TMS	225	B	PVC-U	325728.76	6260286.62	T.M.S.

Ivanhoe Estate - Civil Works Stage 1B

WORK AS CONSTRUCTED CERTIFICATION	SYDNEY WATER CORPORATION
DEVELOPER	Sydney WATER
W.S.C.	
CONSTRUCTOR	Case No. 192226ww — SHT 3 OF 7 SHTS.
COMPLETED	
W.A.C. PREPARED	
DESIGNER . . . . . I CERTIFY THAT THE WORKS HAVE BEEN CONSTRUCTED IN ACCORDANCE WITH THE WORK AS CONSTRUCTED DRAWINGS	SYDNEY WATER CORPORATION FOR DETAILS OF SERVICES SEE SHEET 1

PLAN DRAWN DATE: 7/7/21 VERSION: 03 SHEET 3 OF 7 SHEETS

R.A.R. REFERENCE: 41-24958-3A DESIGNED: D.I.S./G.R. DRAFTED: G.R. VERIFIED: J.G. REVIEWED: D.I.S. VARIATION ID: APPROVAL DATE:

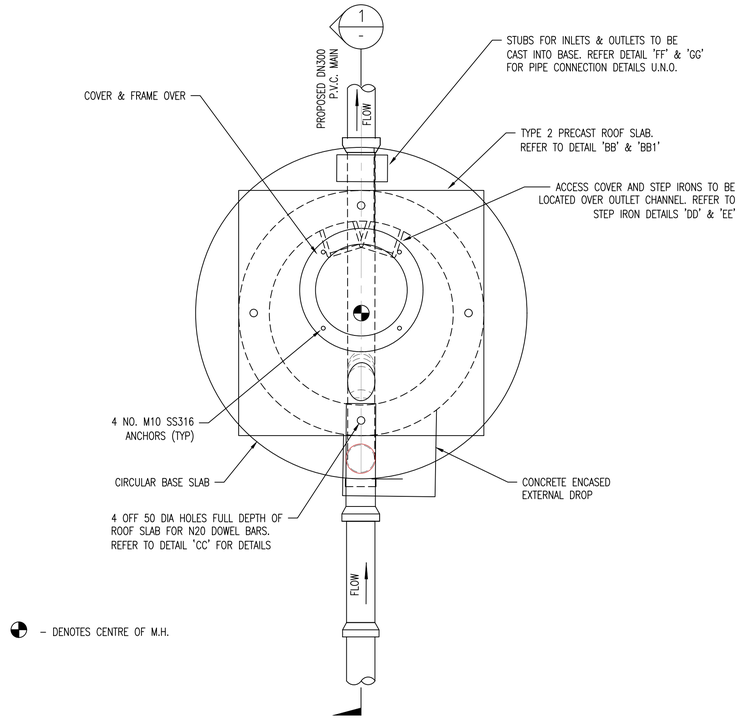

MAINTENANCE HOLE - PLAN

NOT TO SCALE

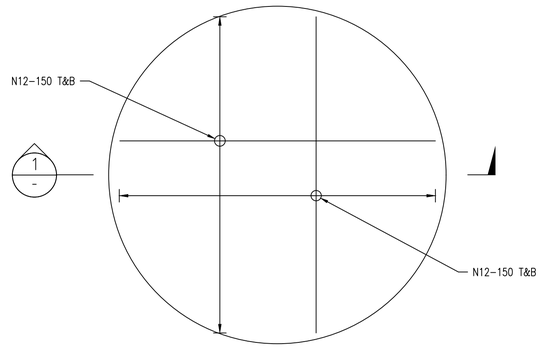

ALL REINFORCEMENT N12-150 COGGED TYP. U.N.O.
STARTER BARS NOT SHOWN FOR CLARITY

M.H. BASE SLAB REINFORCEMENT

(NOT TO SCALE)

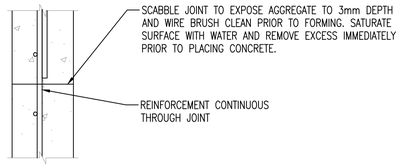

CONSTRUCTION JOINT (C.J.)

(NOT TO SCALE)

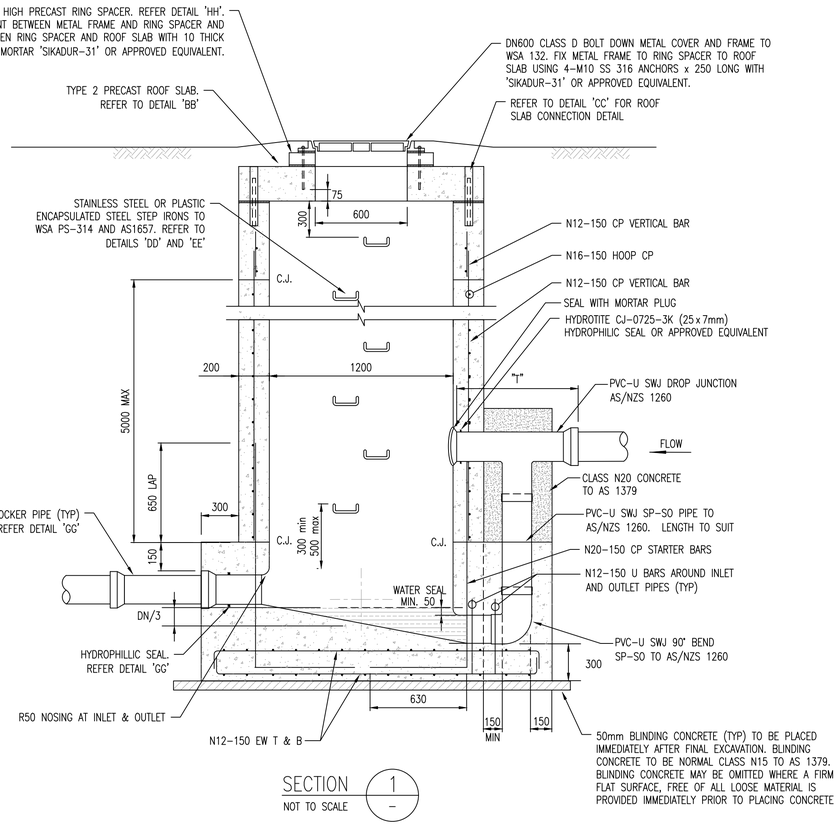

SECTION 1 – NOT TO SCALE

VERTICAL DROP	
PIPE SIZE (DN)	"T" MINIMUM #
300	1100

BASED ON CURRENT AVAILABILITY AND DIMENSION OF PIPE FITTINGS.

DETAIL 'AA1'
REINFORCED M.H. WITH WATERSEALED INLET

WATERSEALED MAINTENANCE HOLE NOTES:

GENERAL:

G1. THIS DRAWING SHALL BE READ IN CONJUNCTION WITH THE FOLLOWING:

A. SEWERAGE CODE OF AUSTRALIA WSA-02-2002-2.2 SYDNEY WATER EDITION 1 – VERSION 4 – PART 3

B. WSA 201-2013-1.1 MANUAL FOR SELECTION AND APPLICATION OF PROTECTIVE COATINGS AND SYDNEY WATER SUPPLEMENT TO WSA 201

C. SYDNEY WATER STANDARD SPECIFICATION SS210 CORROSION PROTECTION AND REHABILITATION OF MAINTENANCE REV. 3

D. SYDNEY WATER LIST OF ACCEPTABLE PRODUCT SPECIFICATIONS.

E. WSA 114-2002 INDUSTRY STANDARD FOR CONCRETE SPECIAL CLASS

F. WSA-2011 INDUSTRY STANDARD FOR DUCTILE IRON ACCESS COVERS FOR WATER SUPPLY & SEWERAGE

G2. ALL DIMENSIONS IN MILLIMETRES UNLESS NOTED OTHERWISE.

G3. SETTING OUT DIMENSIONS AND SIZES OF STRUCTURAL MEMBERS NOT TO BE OBTAINED BY SCALING THE DRAWINGS.

G4. WHERE PROPRIETARY PRODUCTS HAVE BEEN SPECIFIED, A SUITABLE EQUIVALENT MAY BE USED WHERE APPROVED BY SYDNEY WATER. PROPRIETARY PRODUCTS SHALL BE INSTALLED STRICTLY IN ACCORDANCE WITH THE MANUFACTURER'S INSTRUCTIONS.

G5. ALL INTERNAL SURFACES (EXCLUDING BENCHING) OF MAINTENANCE HOLES SHALL BE PROVIDED WITH A PROTECTIVE COATING IN ACCORDANCE WITH WSA 201 AND SYDNEY WATER SUPPLEMENT. COATING SYSTEM SHALL BE CPL, EUH OR NOV.

FOUNDATIONS:

F1. MINIMUM ALLOWABLE BEARING PRESSURES FOR MAINTENANCE HOLES SHALL BE 100kPa. ALLOWABLE BEARING CAPACITY TO BE CONFIRMED BY A SUITABLY QUALIFIED GEOTECHNICAL ENGINEER PRIOR TO POURING MAINTENANCE HOLE BASE.

F2. ANY OVER-EXCAVATION OR VOIDS OF FOUNDATION MATERIALS TO BE FILLED WITH NORMAL CLASS N15 MASS CONCRETE TO AS 1379.

F3. BLINDING CONCRETE OR BEARING SURFACE SHALL BE SATURATED WITH WATER AND EXCESS REMOVED IMMEDIATELY PRIOR TO POURING CONCRETE BASE.

CONCRETE:

C1. CONCRETE DIMENSIONS SHOWN DO NOT INCLUDE THICKNESS OF APPLIED FINISHES.

C2. MINIMUM CLEAR COVER TO REINFORCEMENT SHALL BE 75mm U.N.O.

C3. CONCRETE SHALL BE SPECIAL CLASS SCC40 TO WSA 114-2002 EXCEPT AS VARIED BELOW:

SECTION 4 – MIX DESIGN:

MINIMUM F'c AT 28 DAYS	40MPa
MINIMUM BINDER CONTENT	450kg/m^3
MAXIMUM 56 DAY DRYING SHRINKAGE STRAIN	600 x 10^{-6}
MAXIMUM WATER : CEMENT RATIO	0.45
SLUMP	80 – 120mm

SECTION 6 – SUPPLEMENTARY CEMENTITIOUS MATERIALS
THE TOTAL AMOUNT OF SUPPLEMENTARY CEMENTITIOUS MATERIALS SHALL NOT BE MORE THAN 60% BY WEIGHT OF THE TOTAL CEMENT MATERIAL.

SECTION 6.2 – FLY ASH
THE MAXIMUM AMOUNT OF FLY ASH SHALL BE 25% BY WEIGHT OF THE TOTAL CEMENT MATERIAL.

SECTION 6.3 – SLAG
THE MAXIMUM AMOUNT OF SLAG SHALL BE 50% BY WEIGHT OF THE TOTAL CEMENT MATERIAL.

SECTION 6.5 – AGGREGATES
THE MAXIMUM NOMINAL SIZE OF AGGREGATE SHALL BE 20mm. RECYCLED MATERIAL OR SLAG PRODUCTS SHALL NOT BE USED AS AGGREGATES.

SECTION 6.7 – CHEMICAL ADMIXTURES
WHERE TWO OR MORE ADMIXTURES ARE PROPOSED FOR INCORPORATION INTO A CONCRETE MIX, THE MANUFACTURERS SHALL CERTIFY THE COMPATIBILITY OF THE ADMIXTURES.

C4. CURING OF ALL CONCRETE TO BE ACHIEVED BY KEEPING SURFACES CONTINUOUSLY WET FOR A PERIOD OF 7 DAYS. POLYETHYLENE SHEETING OR WET HESSIAN MAY BE USED. POLYETHYLENE AND HESSIAN TO BE ADEQUATELY SECURED TO RESIST WIND AND TRAFFIC FORCES. ALTERNATIVE CURING MAY BE ACHIEVED BY APPLYING SIKA ANTISOL WB CURING COMPOUND OR APPROVED EQUIVALENT TO ALL SURFACES IN ACCORDANCE WITH THE MANUFACTURER'S REQUIREMENTS FOR A PERIOD OF 14 DAYS.

C5. CONCRETE SHALL ACHIEVE A MINIMUM COMPRESSIVE STRENGTH OF 32MPa PRIOR TO BACKFILLING AND TESTING OF STRUCTURES. BACKFILL SHALL BE PLACED AND COMPACTED EVENLY AROUND MAINTENANCE HOLES IN LAYERS NOT EXCEEDING 300mm LOOSE THICKNESS.

STRUCTURAL CRITERIA:

SD1. SOIL PROPERTIES:
ø' = 30°
DENSITY (y) = 20kN/m^3
COEFFICIENT OF EARTH PRESSURE AT REST Ko = 0.5

SD2. LOADS:
LIVE LOAD:
SUBJECT TO VEHICULAR TRAFFIC – SM1600 TO AS5100.2
SURCHARGE AROUND STRUCTURES = 20 kPa
GROUND WATER AT SURFACE

SD3. CONCRETE EXPOSURE CLASSIFICATION: D (AS3735)

FORMWORK:

FW1. FORMWORK AND CONCRETE FINISHES SHALL BE IN ACCORDANCE WITH AS 3610. SURFACE EXPOSED TO VIEW – CLASS 2. SURFACE NOT EXPOSED TO VIEW – CLASS 4.

FW2. CONCRETE SHALL ACHIEVE A MINIMUM COMPRESSIVE STRENGTH OF 25MPa PRIOR TO STRIPPING OF FORMWORK.

REINFORCEMENT:

R1. STEEL REINFORCING MATERIALS SHALL BE TO AS/NZS 4671.
SHAPE – D
STRENGTH GRADE = 500MPa
DUCTILITY CLASS – N

R2. REINFORCEMENT IS REPRESENTED DIAGRAMMATICALLY; IT IS NOT NECESSARILY SHOWN IN TRUE PROJECTION.

R3. DESIGNATION OF REINFORCEMENT BARS IS AS IN EXAMPLE:

No. OF BARS IN A GROUP — 17 N20 – 350 EF — BAR GRADE & TYPE
NOMINAL BAR SIZE IN mm — LOCATION OR COMMENT
SPACING IN mm

R4. THE FOLLOWING ABBREVIATIONS APPLY TO THE LOCATION OF REINFORCEMENT:

EW EACH WAY	FF FAR FACE	CP CENTRALLY PLACED
EF EACH FACE	B BOTTOM	BB BOTTOM BOTTOM (LAID FIRST)
NF NEAR FACE	T TOP	TT TOP TOP (LAID FIRST)

R5. EXTENT OF BARS SHOWN THUS:

TYPICAL BAR

R6. SPLICE REINFORCEMENT ONLY AT LOCATIONS SHOWN ON DRAWINGS. LAP LENGTHS TO COMPLY WITH THE FOLLOWING UNLESS NOTED OTHERWISE.
N12 – 400 LAP
N16 – 500 LAP
N20 – 650 LAP

R7. LOAD BEARING WELDED JOINTS FOR THE TRANSMISSION OF LOADS BETWEEN REINFORCEMENT IS NOT PERMITTED.
NON LOAD BEARING WELDED JOINTS (TACK WELDS) TO KEEP REINFORCEMENT IN POSITION DURING FABRICATION, TRANSPORT & CONCRETING, IS PERMITTED WHERE WELDING WILL NOT IMPACT DUCTILITY OF REINFORCEMENT.
WELDING SHALL BE IN ACCORDANCE WITH AS 1554.3.
LAP LENGTHS SHALL NOT BE REDUCED DUE TO WELDING.

Ivanhoe Estate - Civil Works Stage 1B

WORK AS CONSTRUCTED CERTIFICATION	Sydney WATER — SYDNEY WATER CORPORATION
DEVELOPER	
W.S.C.	
CONSTRUCTOR	Case No. 192226ww — SHT 4 OF 7 SHTS.
COMPLETED	
W.A.C. PREPARED	
DESIGNER I CERTIFY THAT THE WORKS HAVE BEEN CONSTRUCTED IN ACCORDANCE WITH THE WORK AS CONSTRUCTED DRAWINGS	SYDNEY WATER CORPORATION FOR DETAILS OF SERVICES SEE SHEET 1

PLAN DRAWN DATE: 7/7/21 VERSION: 03 SHEET 4 OF 7 SHEETS

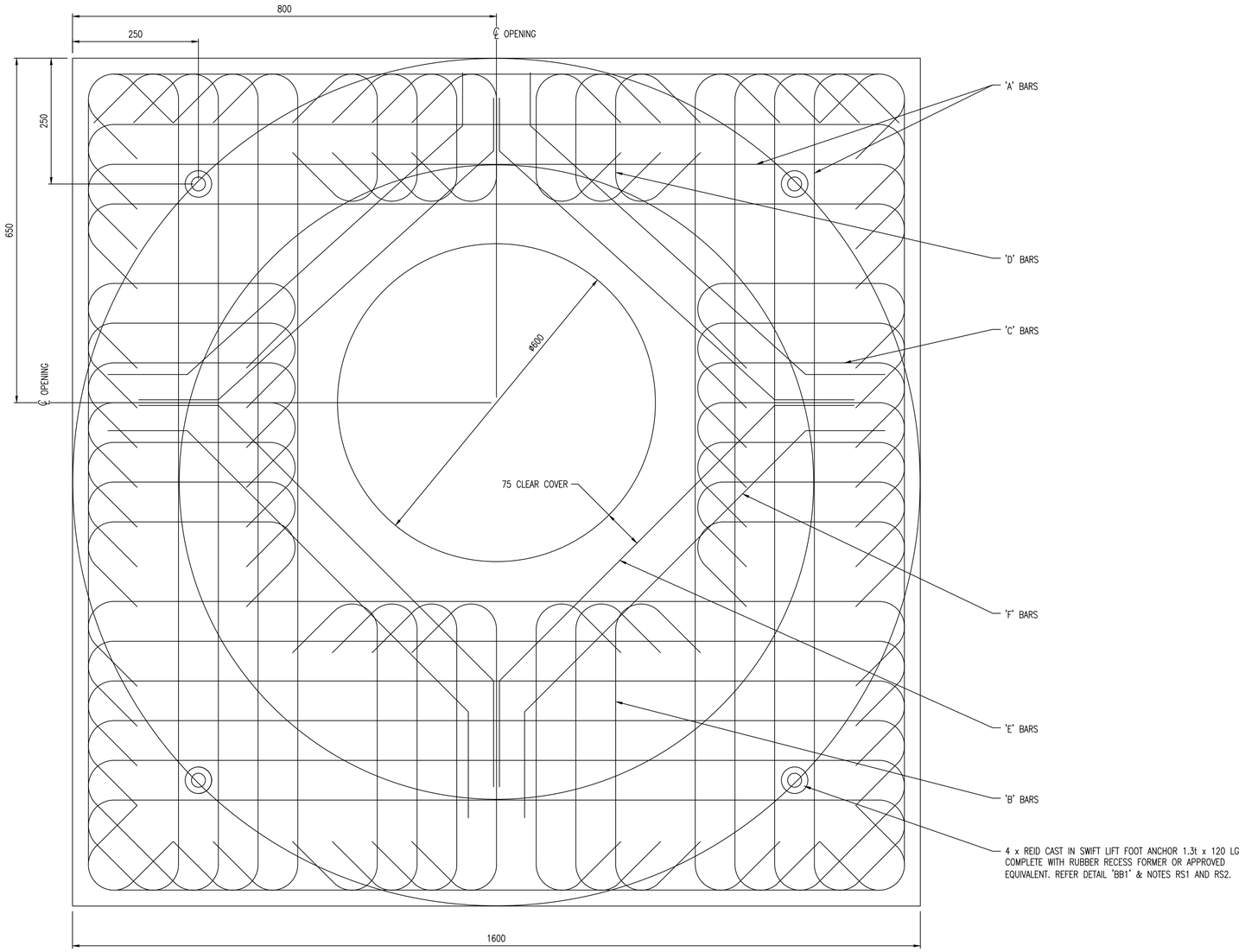

DESIGN LOADS

ROOF SLAB	DESIGN WHEEL LOAD	TYPICAL USE
TYPE 1	2,670 kg (CLASS BE TO AS3996)	FOR AREAS WITHIN RESIDENTIAL PRIVATE PROPERTIES EXCLUDING DRIVEWAYS, AND PUBLIC PLACES, PEDESTRIAN MALLS, FOOTWAYS AND PARKLAND PROTECTED FROM VEHICULAR LOADING OR HAVE NO ACCESS FOR VEHICLES.
TYPE 2	8,000 kg (W80 TO AS 5100.2)	FOR PUBLIC AND PRIVATE ROAD CARRIAGEWAYS, FOOTPATHS/VERGES/MEDIAN STRIPS NOT RESTRICTED TO VEHICLES, DRIVEWAYS IN AREAS ZONED 'RESIDENTIAL, INDUSTRIAL OR COMMERCIAL,' AND PARKLAND WITH NO RESTRICTION TO VEHICULAR ACCESS

BAR SCHEDULE

DESIGNATION	SHAPE	No.	TYPE 2 BAR SIZE
A	1540	21	N16
B	540	7	N16
C	390	14	N16
D	240	7	N16
E	135° 135° 100 200 735	4	N16
f	135° 135° 200 200 750	4	N16

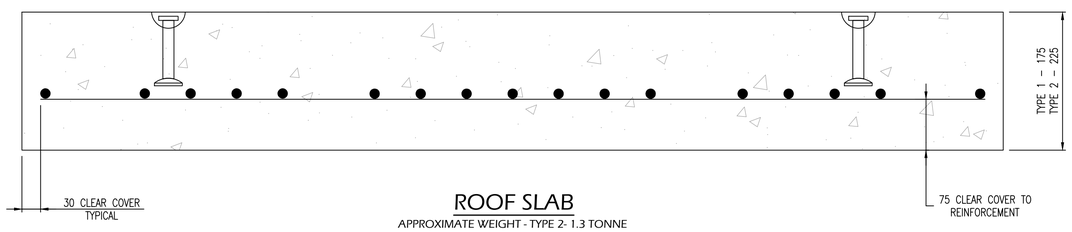

ROOF SLAB

APPROXIMATE WEIGHT - TYPE 2- 1.3 TONNE

NOT TO SCALE

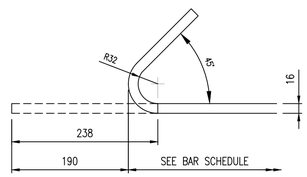

N16 HOOK BENDING DETAILS

NOT TO SCALE

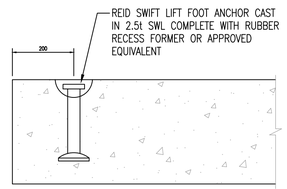

DETAIL 'BB1'

PRECAST ROOF CASTING DETAIL (TYP.)

(NOT TO SCALE)

ROOF SLAB NOTES:

RS1. PRECAST CONCRETE ROOF PANEL TO HAVE A MINIMUM STRENGTH OF 25MPa AT LIFTING.

RS2. SPREADER BARS MUST BE USED DURING LIFTING TO ENSURE LIFT FORCE IS VERTICAL

DETAIL 'BB'

ROOF SLAB REINFORCEMENT

(NOT TO SCALE)

Ivanhoe Estate - Civil Works Stage 1B

WORK AS CONSTRUCTED CERTIFICATION	SYDNEY WATER CORPORATION
DEVELOPER	Sydney WATER
W.S.C.	
CONSTRUCTOR	Case No. 192226ww — SHT 5 OF 7 SHTS.
COMPLETED	
W.A.C. PREPARED	
DESIGNER	SYDNEY WATER CORPORATION
I CERTIFY THAT THE WORKS HAVE BEEN CONSTRUCTED IN ACCORDANCE WITH THE WORK AS CONSTRUCTED DRAWINGS	FOR DETAILS OF SERVICES SEE SHEET 1

PLAN DRAWN DATE: 7/7/21 VERSION: 03 SHEET 5 OF 7 SHEETS

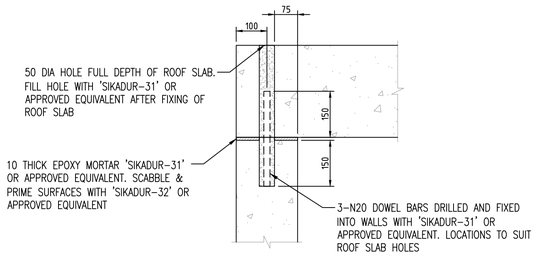

DETAIL 'CC'

PRECAST ROOF CONNECTION DETAIL (TYP.)

(NOT TO SCALE)

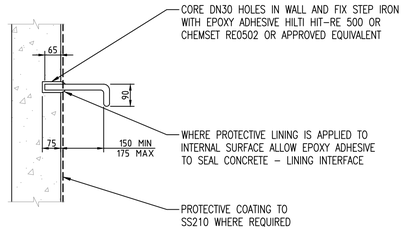

DETAIL 'DD'

STEP IRON FIXING DETAIL (TYP.)

(NOT TO SCALE)

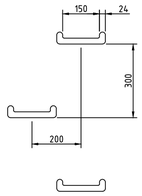

DETAIL 'EE'

STEP IRON SET OUT DETAIL (TYP.)

(NOT TO SCALE)

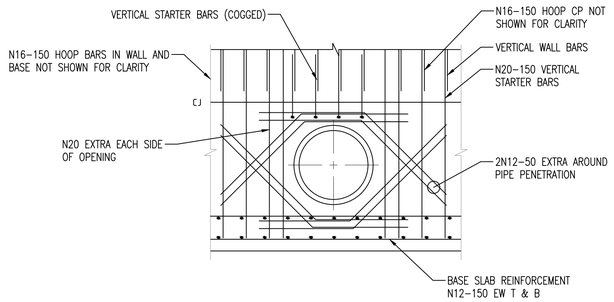

DETAIL 'FF'

PENETRATION DETAIL IN BASE SLAB (TYP.)

(NOT TO SCALE)

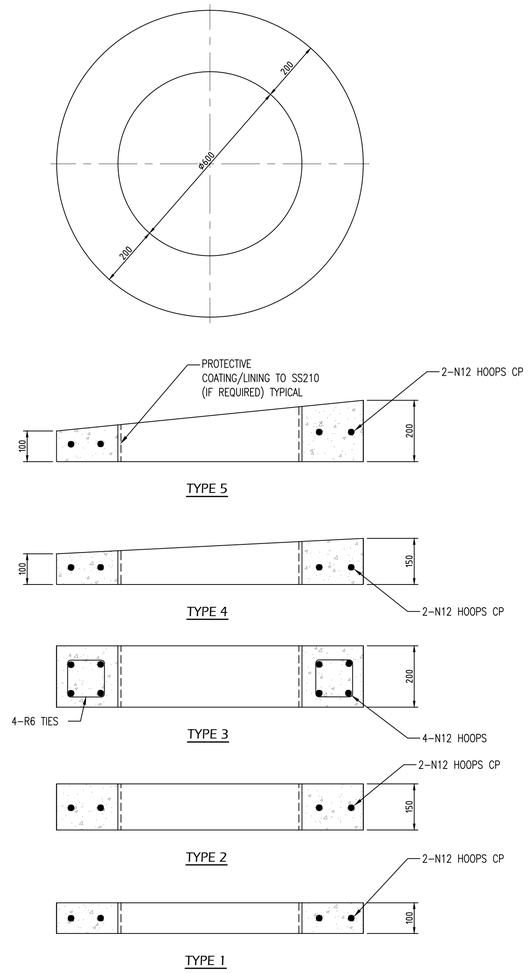

DETAIL 'HH'

PRECAST RING SPACER DETAIL (TYP.)

(NOT TO SCALE)

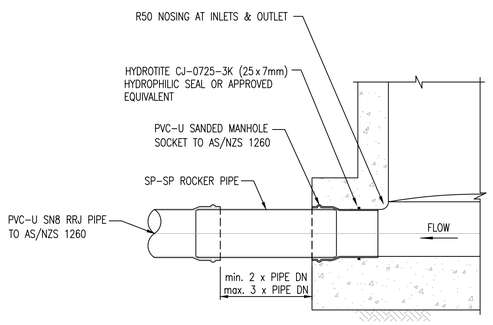

DETAIL 'GG'

TYPICAL M.H. BASE FOR RRJ PVC

(NOT TO SCALE)

Ivanhoe Estate - Civil Works Stage 1B

WORK AS CONSTRUCTED CERTIFICATION	SYDNEY WATER CORPORATION
DEVELOPER	Sydney WATER
W.S.C.	
CONSTRUCTOR	Case No. 192226ww — SHT 6 OF 7 SHTS.
COMPLETED	
W.A.C. PREPARED	
DESIGNER	SYDNEY WATER CORPORATION
I CERTIFY THAT THE WORKS HAVE BEEN CONSTRUCTED IN ACCORDANCE WITH THE WORK AS CONSTRUCTED DRAWINGS	FOR DETAILS OF SERVICES SEE SHEET 1

PLAN DRAWN DATE: 7/7/21 VERSION: 03 SHEET 6 OF 7 SHEETS

A1F

DEVELOPER CONTRACT PLAN

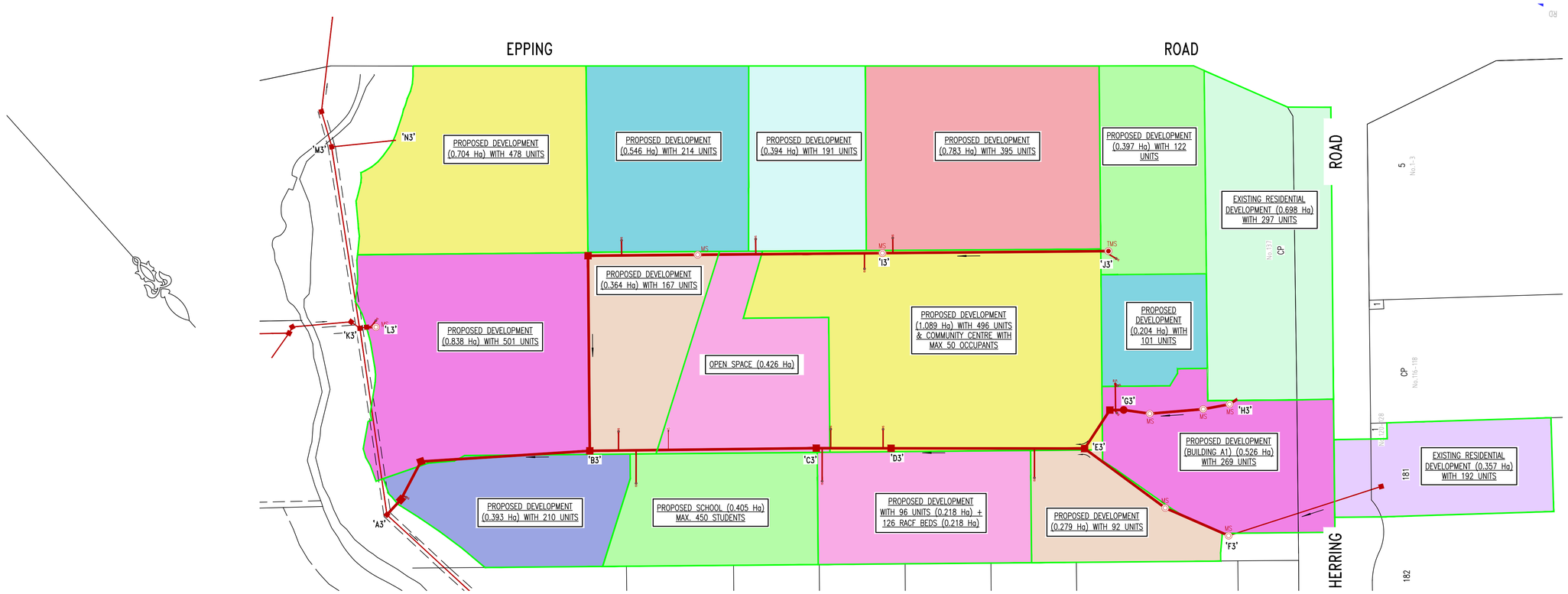

CATCHMENT PLAN – ULTIMATE STAGE

(NOT TO SCALE)

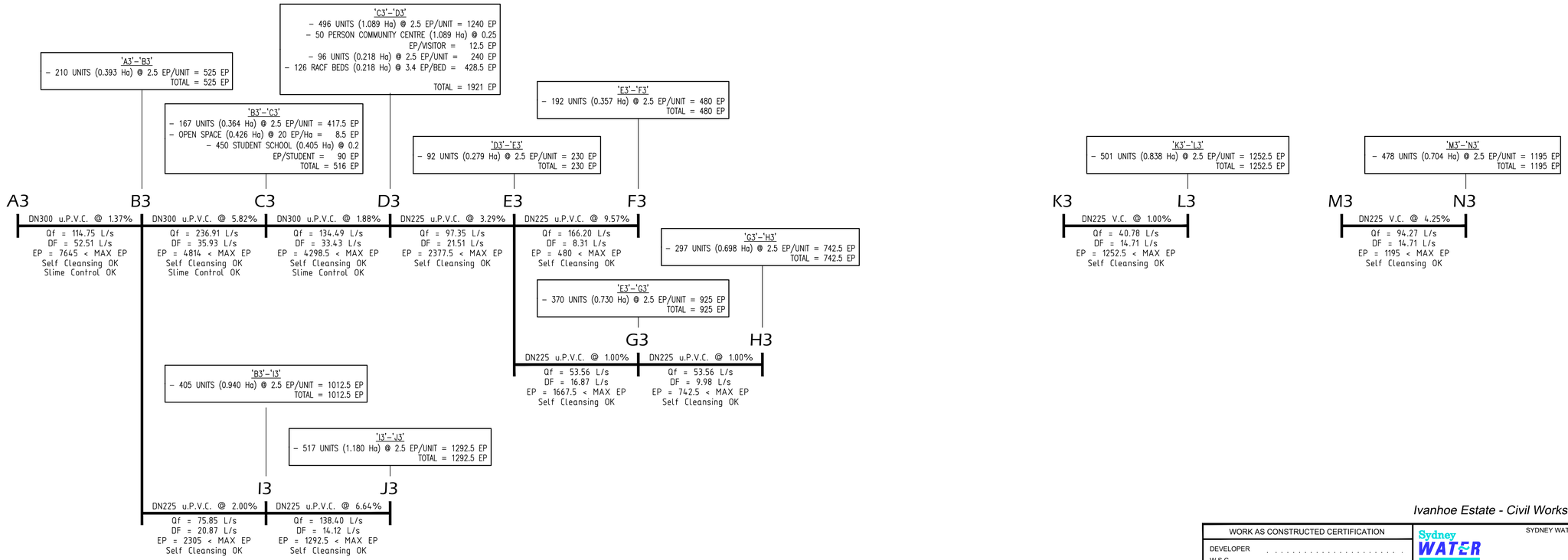

FLOW DIAGRAM – ULTIMATE STAGE

Ivanhoe Estate - Civil Works Stage 1B

WORK AS CONSTRUCTED CERTIFICATION	SYDNEY WATER CORPORATION
DEVELOPER	Sydney WATER
W.S.C.	
CONSTRUCTOR	Case No. 192226ww — SHT 7 OF 7 SHTS.
COMPLETED	
W.A.C. PREPARED	
DESIGNER	SYDNEY WATER CORPORATION
I CERTIFY THAT THE WORKS HAVE BEEN CONSTRUCTED IN ACCORDANCE WITH THE WORK AS CONSTRUCTED DRAWINGS	FOR DETAILS OF SERVICES SEE SHEET 1

PLAN DRAWN DATE: 7/7/21 VERSION: 03 SHEET 7 OF 7 SHEETS

R.A.R. REFERENCE: 41-24958-3A DESIGNED: D.I.S./G.R. DRAFTED: G.R. VERIFIED: J.G. REVIEWED: D.I.S. VARIATION ID: APPROVAL DATE:

Sydney WATER

Case Number: 192226

June 24, 2021

FRASERS PROPERTY IVANHOE PTY LTD
c/- ROSE ATKINS RIMMER

Letter of conditions
For adjustment/extension of a Sydney Water asset

Applicant: **FRASERS PROPERTY IVANHOE PTY LTD**
Your reference: **41/24958/3A**
Property location: **HERRING RD, Macquarie Park**
Your application date: **June 15, 2021**

Dear Applicant

Your application to deviate/extend the sewer main at the above location is approved provided you do the following things:

1. You must enter into an agreement with us in the form of the enclosed Deed.

2. You must engage your current or another authorised Water Servicing Coordinator (WSC) to manage the design and construction of the required works to Sydney Water's standards and procedures. Before you engage another WSC you must write and tell us.

   You'll find a list of WSC's at Listed providers on our website. WSC will give you a quote or information about costs for services/ works including our costs.

   The WSC generally will be the single point of contact between you and us. They can answer most questions you might have about our process and charges.

3. After you engage a WSC, you, and your accredited Developer Infrastructure Providers (Providers) will need to sign and lodge both copies of the enclosed Deed with your nominated WSC. After we've signed the documents, one copy will be returned to the WSC.

   The Deed sets out for this project:
   - your responsibilities
   - our responsibilities; and
   - the Provider's responsibilities.

   You must do all the things that we ask you to do in that Deed.

   If we don't receive the signed Deed for our signing by June 24, 2022 you will need to re-apply (and pay another application fee).

   Note: The WSC must be fully authorised by us for the whole time of the Deed.

4. If you need to enter a neighbouring property, you must have the written permission of the relevant property owners and tenants. You must use our **Permission to Enter** form(s) for this. You can get copies of these forms from your WSC or our website. Your WSC can also negotiate on your behalf.

   Please make sure that you address all the items on the form(s) including payment of compensation and whether there are other ways of designing and constructing that could avoid or reduce their impacts. You will be responsible for all costs of mediation involved in resolving any disputes. Please allow enough time for entry issues to be resolved.

5. You must not start work on the existing sewer main or the proposed adjustment/extension until we've advised your WSC. This includes the placement of any temporary pipework. Before you can do this pipework, you must engage your WSC to lodge an application that must include appropriate temporary pipework detail as well as the design of the proposed adjustment/extension.

   We'll then assess both designs and advise your WSC when they are approved and of any conditions to be met before pipe placement.
   - the lodgement of an unconditional security bond from an acceptable financial institution that will cover our risk for this work
   - your acceptance in writing to bonding conditions that we will provide in another agreement.

If any work on our assets is carried out without that advice or final approval, we'll take action to have work on the site stopped. We'll apply the provisions of Section 45 of the Sydney Water Act 1994.

6. Construction of these works will require you to pay project management, survey, design, and construction costs **directly to your Providers**. Additional costs payable to us may include:
   - water main shutdown and disinfection
   - connection of new water mains to our system(s)
   - design and construction audit fees
   - contract administration, Operations Area Charge & Customer Redress prior to project finalisation
   - creation or alteration of easements etc
   - water usage charges where water has been supplied for building activity purposes prior to disinfection of a newly constructed water main.

   Note: Payment for any Goods and Services (including Customer Redress) provided by us will be required prior to the release of the Bank Guarantee or Cash Bond.

   Your WSC can tell you about these costs.

7. Because this work involves construction on our "live" sewer main, you must also:
   - have your Building Plans are approved prior to temporary pipework and excavation
   - submit your temporary pipework design (if required) with your permanent wastewater deviation design for approval
   - accept in writing to bonding conditions that will be provided in the Bond Agreement
   - submit your Bond and signed Bond Agreement
   - submit the Construction Commencement Notice for construction of the temporary pipework
   - have your temporary pipework constructed by a listed provider
   - complete your permanent deviation works.

   After we receive a copy of the successful tender for the work, we can calculate the amount of this bond. We'll then send you that other agreement which will tell you this amount. You must lodge the bond and the completed agreement with us before you start constructing the work.

   The bond will be released after you have completed the construction of the works. (This includes lodgement of Work As Constructed plans and production and/or recreation of documentation and reports and completion of all the excavation and landscaping works needed for the total project.)

8. Work as Constructed (WAC) plans.

- Preliminary WAC plans with the assumed connection construction shown must be submitted via email to the Case Manager, prior to the joint Pre-connection inspection.
- The preliminary WAC plans are required to be accepted by the Case Manager prior to the connection being arranged.
- The ITP must be amended to include a hold point for the submission of preliminary WAC plans prior to the joint inspection and acceptance of the WAC plan prior to connection.

END

Sydney WATER

Case Number: 192226

August 3, 2021

ROSE ATKINS RIMMER

Dear Sir/Madam

Property: **HERRING RD, Macquarie Park**
Your Reference: **41/24958/3A**
Plan Identification Number: 192226WW

Attached is the wastewater Design Package for the location of works shown above. This package was received by us and dated July 7, 2021/Version No. 3. **You have indicated that this plan is for tendering purposes.** After you have engaged a Constructor and the following matters have been addressed, this plan can be used for construction. If there are any changes after tendering, you must give us the appropriate Project Variation documents.

After you tell us who the approved Constructor is, lodge both the completed ITP and executed Deed Poll with us, we'll review them and then release your ITP. This will complete your Design Package and enable you to start construction.

For that package:

(a) The following costs will be invoiced to your Company at the finalisation of these works:

Contract Administration
This fee will be invoiced to your company at the current hourly rate of $165.52 (including $15.05 GST). It is for time spent by us during the design, construction, and connection phases of this work.

Notes:
- **An invoice can be issued for the above costs before finalisation. However, if costs are incurred after that invoice, we will charge you at finalisation.**
- **To obtain an invoice before finalisation, you must email the Case Manager.**

- **The Tax Invoice must be paid to us within 30 days of being issued.**
- **You should tell your developer/applicant client of our costs before proceeding with this work.**

(b) If we need additional site inspections, you will be invoiced at the current hourly rate at the completion of this work.

(c) At the finalisation of these works, and before we can issue the Section 73 Compliance Certificate or the release of the Security Bond, the Developer will need to pay any outstanding Developer (DSP) or Recovery charges **directly to us**. Remember that you need to obtain an invoice so these charges can be paid. The invoice can be obtained by contacting the Case Manager.

Connections

While connections to our existing assets are generally at the end of construction, the constructor, in conjunction with the Water Servicing Coordinator (WSC), must review the design prior to commencement of works and identify all connections to our existing assets. All connections at any stage of construction must only proceed after obtaining the appropriate approval from us. All connections to our system are to be made at the completion of construction.

(d) The Generic Asset Hazards/Conditions - At the Point of Connection, listed in the Provider Instructions, **must** be addressed in your Safe Work Plan and Environmental Management Plan.

Remember that:

1. There are work environment hazards that include (but are not limited to) traffic and the closeness of other utility services.
2. All developers, constructors and individuals have an OH&S obligation and a duty of care when working near underground plant.
3. Any person who destroys, damages, or interferes with any of our asset is liable to compensate us.

(e) Extra hold points might be included in the ITP by us when you lodge the Construction Commencement Notice.

(f) The new works will be connecting to a main that is deemed critical to the system and so you need to implement our Sydney Water's Health and Safety Procedure – Flow Management and Isolation of Hydraulic Assets (HSP-070) and submit, via email, a Flow Management Plan addressing any specific requirements provided by Sydney Water.

Submit your Wastewater Form 'A' FIFM requests via email address: wastewaterfifm@sydneywater.com.au

All Wastewater FIFM requests, enquiries, issues and correspondence are also to be submitted via the above email address.

Connection to our asset cannot be carried out prior to submission of a valid Inspection and Test Plan (ITP) and implementation of an approved Flow Management Plan.

(g) **You are not permitted to start any Construction of works without final Development Consent.** Once you receive final Development Consent and there are no significant changes that will affect your design, you will be issued a confirmation letter. If there are significant changes to the development that affect your design, you will be required to submit a new application.

Adjustment/Deviation Construction Works on a Live Main

Because this work involves construction on our "live" sewer main, the Developer must:

- lodge either a cash or unconditional bank guarantee security bond from an acceptable financial institution for to be determined on review of your Bond Request
- signify their acceptance of bonding conditions that we will provide in another agreement.
- have your temporary pipework (if required) constructed by a listed provider
- submit the Construction Commencement Notice for construction of the temporary pipework.

The bond and signed agreement must be given to and executed by us before you start constructing the work.

The bond will be released after you have completed the construction of the works. (This includes lodgement of Work As Constructed plans and production and/or recreation of documentation and reports and completion of all the excavation and landscaping works needed for the total project.)

Construction Commencement Sydney Water Contact

You must send your Construction Commencement Notice to our SWConnect as set down in the Instructions to WSC's (Major Works).

END.

Regards

Libby Clarke | *Project Coordinator*
Monday, Tuesday, Wednesday & Thursday

ROSE ATKINS RIMMER (Infrastructure) Pty Ltd
Water Related Infrastructure Design and Management

Shop 7 & 8 M Centre
40 Sterling Road
Minchinbury New South Wales 2770

P: (02) 9853 0200 | **F:** (02) 9671 7399

Libby.Clarke@rari.com.au

www.rari.com.au

This email and any associated attachment is intended for the addressee only and may contain legal, confidential or privileged information. If you have received this email in error, please contact the sender and delete this message. Whilst every precaution is taken to ensure that this message is virus free, it is the responsibility of the recipient to ensure this on their own behalf.

A1

DEVELOPER CONTRACT PLAN

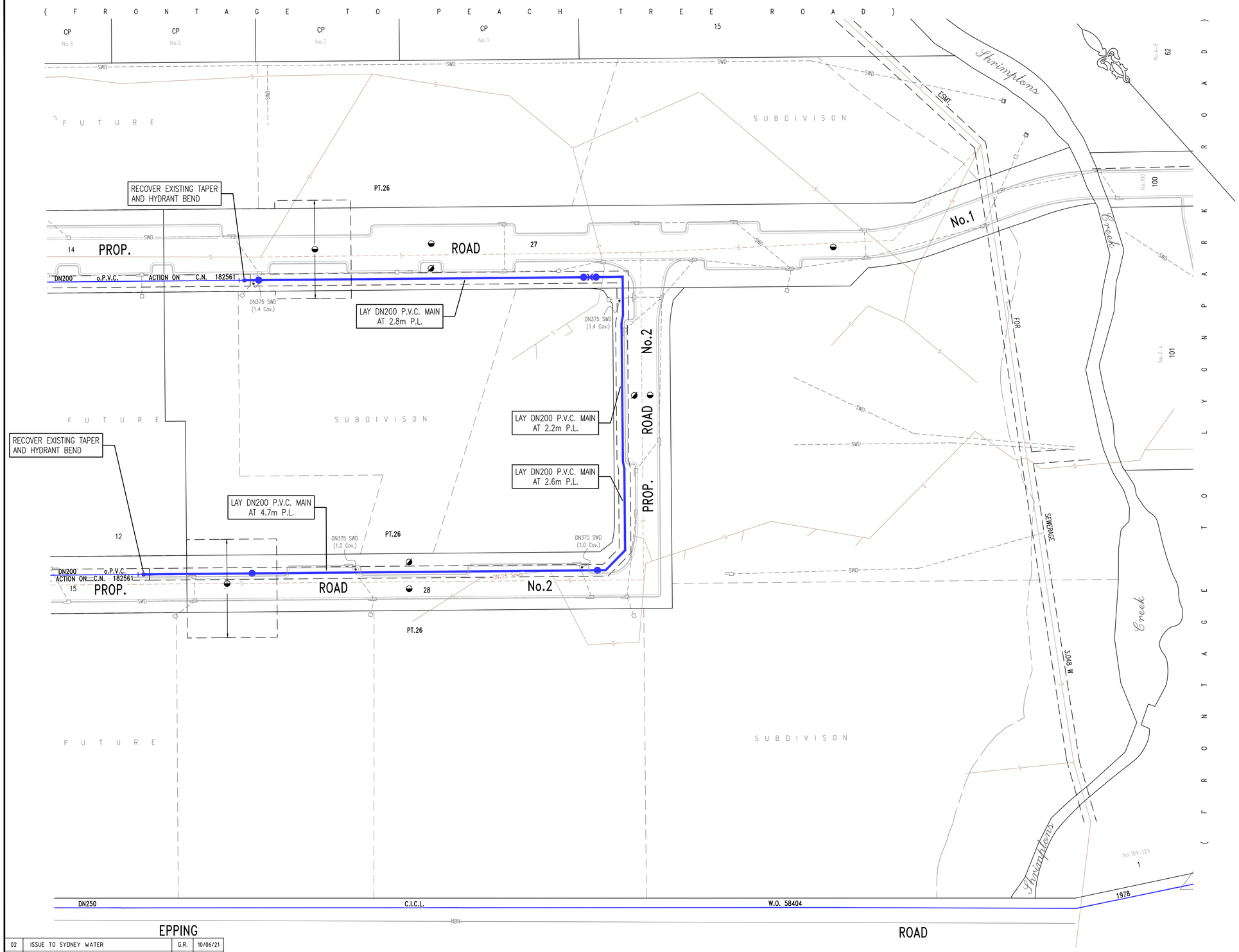

NOTES :–

1. WATER SERVICING COORDINATOR: ROSE ATKINS RIMMER (INFRASTRUCTURE) Pty. Ltd.
   SHOP 7 & 8 M CENTRE
   40 STERLING ROAD MINCHINBURY NSW 2770
   Ph: (02) 9853 0200

   FOR: *FRASERS PROPERTY AUSTRALIA*
   SUITE 11 LEVEL 12 101 BATHURST STREET SYDNEY NSW 2000
   Ph: (02) 9263 8888

2. *ALL WORKS & MATERIALS ARE TO BE IN ACCORDANCE WITH SYDNEY WATER TECHNICAL SPECIFICATION – CIVIL (2020) & THE WATER SUPPLY CODE OF AUSTRALIA WSA 03–2011–3.1 (SYDNEY WATER EDITION – 2014). CIVIL TECHNICAL SPECIFICATION TO TAKE PRECEDENCE OVER THE SYDNEY WATER W.S.A. CODE.*

3. ALL SERVICES SHOWN ARE INDICATIVE ONLY. A CURRENT SERVICES SEARCH & SITE CHECK OF ALL EXISTING SERVICES WILL BE REQUIRED PRIOR TO COMMENCEMENT OF ANY WORKS. HEAD CONTRACTOR TO LIAISE WITH TRANSPORT FOR N.S.W. FOR PROPOSED KERB AND SERVICES LOCATIONS.

4. *VERTICAL & HORIZONTAL CLEARANCES BETWEEN WATERMAINS AND UNDERGROUND SERVICES MUST COMPLY WITH TABLE 5.5 OF THE WATER SUPPLY CODE OF AUSTRALIA WSA 03–2011–3.1 (SYDNEY WATER EDITION – 2014). THE CONSTRUCTOR IS TO DETERMINE LEVELS & LOCATIONS OF UTILITIES AND EXISTING WATERMAINS AT CONNECTION LOCATIONS PRIOR TO CONSTRUCTION.*

5. MAIN TO BE LAID GENERALLY AT 2.6m P.L. AT STANDARD DEPTH BELOW TOP OF KERB EXCEPT WHERE OTHERWISE SHOWN.

6. MAINLAYING NOT TO PROCEED PRIOR TO FORMATION OF FOOTWAYS TO FINISHED SURFACE LEVELS.

7. *i) BENDS TO BE ANCHORED IN ACCORDANCE WITH DTC–1110 (Issue A – 31/1/12) U.N.O.*
   ii) TAPERS TO BE ANCHORED IN ACCORDANCE WITH DTC–1112 (Issue B – 29/2/12).
   iii) TEES TO BE ANCHORED IN ACCORDANCE WITH DTC–1113 (Issue B – 29/2/12) U.N.O.
   iv) HYDRANT BENDS TO BE ANCHORED IN ACCORDANCE WITH DTC–1114 (Issue A – 31/1/12).

8. ROAD CROSSINGS & MAINS IN CARRIAGEWAYS TO HAVE STABILISED SAND (20:1 MIX) EMBEDMENT (U.N.O.) & TRENCH BACKFILL TO SUB–GRADE LEVEL ONLY.

9. BURIED FITTINGS ARE NOT TO BE BACKFILLED UNTIL W.A.C. DETAILS HAVE BEEN OBTAINED BY THE DESIGNER & APPROVAL FOR BACKFILLING GIVEN BY THE W.S.C. ALSO REFER NOTE 18.

10. AREA COVERED BY TREE PRESERVATION ORDER.

11. THE MINIMUM NUMBER OF COMPACTION TESTS REQUIRED TO SATISFY THE WATER SUPPLY CODE OF AUSTRALIA ARE:

    TRAFFICABLE:
    PIPE EMBEDMENT ZONE: NIL TRENCH FILL ZONE: NIL

    NON–TRAFFICABLE:
    PIPE EMBEDMENT ZONE: NIL TRENCH FILL ZONE: 3 TESTS

12. MAINS TO BE EASED AROUND FOOTINGS FOR LIGHT POLES, SEATS & STORMWATER PITS. DEFLECTION MAY BE ACHIEVED BY EASING MAIN AT PIPE JOINTS. PIPE DEFLECTIONS SHALL NOT EXCEED MANUFACTURER'S RECOMMENDATION.

13. ◑ EASEMENT FOR WATER SUPPLY PURPOSES 3.0m WIDE TO BE CREATED OVER PROPOSED MAIN ALL FITTINGS AND BENDS TO BE LOCATED BY PROJECTS REGISTERED SURVEYOR PRIOR TO BACK FILLING OF TRENCHES.

14. ◒ EASEMENT FOR ACCESS AND DRAINAGE PURPOSES, 14.5, 21.0, 25.0 WIDE AND VARIABLE TO BE CREATED OVER PROPOSED LOT 14, 15, PART LOT 13, 27 & 28.

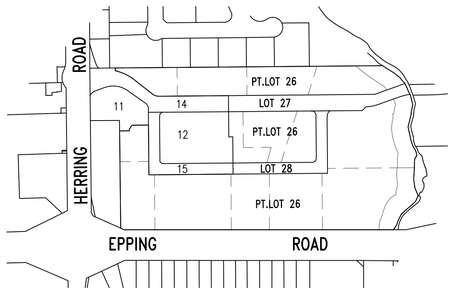

LOCALITY PLAN

No.	REVISION DESCRIPTION	BY	DATE
02	ISSUE TO SYDNEY WATER	G.R.	10/06/21
01	INITIAL ISSUE FOR CLIENT REVIEW	D.P.	21/4/21

Ivanhoe Estate - Civil Works Stage 1B

PLAN TO BE READ IN CONJUNCTION WITH CURRENT SYDNEY WATER STANDARDS
SYDNEY WATER CORPORATION

PRIOR TO COMMENCEMENT OF EXCAVATION FOR PROPOSED AND EXISTING SERVICES CONTACT :-
DIAL BEFORE YOU DIG . . . . . Ph. 1100
ELECTRICITY . . AUSGRID . . . . . Ph. 02 4951 0899
GAS . . JEMENA GAS NORTH . . . . Ph. 1300 880 906
TELECOMMUNICATIONS . . TELSTRA . Ph. 1800 653 935
. . . . . Ph. . . . . .
GIVING AT LEAST 48 HOURS NOTICE.

UTILITIES

TYPE	DATE	REF.	TYPE	DATE	REF.
SEWER: —S—	3/03/20	HYDRA			
PROP SEWER: — — —S— — —	3/03/20	RAR			
AUSGRID: —E—	3/03/20	SURVEY			
TELSTRA: —TEL—	3/03/20	SURVEY			
NBN: —NBN—	3/03/20	SURVEY			
GAS: —G(MP)—	3/03/20	SURVEY			
STORMWATER: —SWD—	3/03/20	SURVEY			
PROP STORMWATER: — —SWD— —	3/03/20	SURVEY			

WORK AS CONSTRUCTED CERTIFICATION

DEVELOPER . . . . . .
WATER SERVICE CO-ORDINATOR . . . . . .
CONSTRUCTOR . . . . . .
COMPLETED . . . . . W.A.C. PREPARED . . . . . .

DESIGNER . . . . . .
I CERTIFY THAT THE WORKS HAVE BEEN CONSTRUCTED IN ACCORDANCE WITH THE WORK AS CONSTRUCTED DRAWINGS.

PIPE SCHEDULE

SIZE (DN)	TYPE	CLASS	LENGTH	PIPE JOINING METHOD / NOTES
200	P.V.C.	PN316	295	

DESIGN HEAD 120 m
~~BOUNDARY TRAPS REQUIRED.~~

GDA2020
AUSTRALIAN HEIGHT DATUM

SCALES
PLAN 1:500 SECTION { HOR. — / VERT. —
CROSS SECTIONS — NATURAL
LENGTHS, DEPTHS & LEVELS ARE IN METRES.

NO AMENDMENTS ARE TO BE MADE TO THIS PLAN WITHOUT REFERENCE TO SYDNEY WATER. THIS PLAN IS NOT NECESSARILY UP TO DATE OR CORRECT AND SYDNEY WATER ACCEPTS NO RESPONSIBILITY.

U.B. DIRECTORY . . 193 P3 (Version 8 Digital) . .

SHEET 1 OF 1 | File No. N/A

Sydney WATER — SYDNEY WATER CORPORATION

Case No. 189977pw

POTABLE WATER MAIN EXTENSION
HERRING & EPPING ROAD
MACQUARIE PARK
CITY OF RYDE

PLAN DRAWN DATE: 10/06/2021 VERSION: 02 SHEET 1 OF 1 SHEETS

R.A.R. REFERENCE: 41-24958-3A *DESIGNED:* D.I.S. / G.R. *DRAFTED:* G.R. *VERIFIED:* J.G. *REVIEWED:* D.I.S. *VARIATION ID:* *APPROVAL DATE:*

Developer Works Deed

Case number: 189977

Site: HERRING RD, Macquarie Park

Type of works:

- ☐ **Drinking water**
- ☐ **Recycled water**
- ☐ **Wastewater – major**
- ☐ **Wastewater – minor**
- ☐ **Stormwater**

By signing this Deed, all parties acknowledge that they have read Developer Works Deed Schedule 1: Standard Terms, Version 5, available from www.sydneywater.com.au.

(Applicant WSC reference: 41/24958/3A)

Contents

About this Deed **3**

Part A Entering into the agreement **4**

A1 Legal capacity and authorisations 4

A2 Power of attorney 4

A3 Entire agreement 4

A3 Power and authority to enter agreement 4

Part B Using the Deed documents **5**

B1 What makes up the Deed 5

B2 How the Deed operates 5

Part C Executing this Deed **6**

Executed as a deed 6

Copyright and disclaimer

© Sydney Water Corporation (Sydney Water) ABN 49 776 225 038. Except as permitted under the *Copyright Act 1968* (Cth), no part of this document may be copied, reproduced or extracted by any means (including electronic data storage) without prior written permission of Sydney Water. Permission is given to use this document only to tender to supply goods and services to Sydney Water. Sydney Water accepts no liability if these documents are used for any other purpose.

About this Deed

Developer Works

Case number: 189977

Site: HERRING RD, Macquarie Park

Parties

Sydney Water:	Sydney Water Corporation	**ABN:**	49 776 225 038
Developer:	FRASERS PROPERTY IVANHOE PTY LTD	**ABN:**	
WSC & Designer:	ROSE ATKINS RIMMER	**ABN:**	
Constructor:		**ABN:**	

Note Designer & WSC must be the same party

Background

(a) The Developer wants to carry out the Developer Works and has lodged an e-Developer Application with Sydney Water.

(b) Sydney Water has responded to the e-Developer Application with a Notice of Requirements (NOR).

(c) The Developer wants to go ahead and all parties involved in the works record their rights and obligations in this Developer Works Deed.

Agreement

(a) The Developer is responsible for the Developer Works.

(b) Each party must perform the obligations imposed on it by the Developer Works Deed.

Part A Entering into the agreement

A1 Legal capacity and authorisations

Each party warrants that:

(a) it has full legal capacity and power to:

(i) own its property and carry on its business

(iii) enter into this agreement and carry out the transactions it covers

(b) it holds each authorisation necessary to:

(i) properly execute this document and carry out the transactions

(ii) make this document legal, valid, binding and admissible in evidence

(iii) properly carry on its business

and it is complying with any conditions of these authorisations

(c) it is not entering into this agreement as a trustee of any trust or settlement.

A2 Power of attorney

Each person who executes this document under a power of attorney declares that he or she is not aware of any fact or circumstance that might affect his or her authority to do so.

A3 Entire agreement

The agreement constitutes the entire agreement between the parties in relation to the works and supersedes all prior representations, agreements, promises, understandings and commitments, whether oral or in writing, between the parties concerning the works. The Developer, Water Servicing Coordinator, Designer and Constructor warrant to Sydney Water that neither party has entered into this agreement in reliance upon such representations, agreements, promises, understandings or commitments with or on the part of Sydney Water.

A3 Power and authority to enter agreement

Each party represents and warrants that it has the full power to enter into and perform its obligations under this agreement and that when executed will constitute legal, valid and binding obligations under its terms.

Part B Using the Deed documents

B1 What makes up the Deed

The parties agree that the Developer Works Deed comprises:

(a) this document and the conditions it contains

(b) the Standard Terms in Schedule 1 to this document (version 5), except where another Deed document [see B1(d)] changes or overrules them

(c) any other schedules or annexures to this document

(d) any other document referred to in the Deed as forming part of it, including the Notice of Requirements and the Job Specific Schedule Letter (for Major Works only)

(e) Sydney Water's Provider Instructions.

B2 How the Deed operates

(a) The Developer Works Deed makes up the entire agreement between the parties about the Developer Works. It completely replaces any previous understanding, agreement or warranty.

(b) The Developer Works Deed is not a construction contract or arrangement, as defined in the *Building and Construction Industry Security of Payments Act 1999* (NSW), between Sydney Water and any other party.

(c) The Developer Works Deed applies to any Developer Works that are performed before the Deed itself is executed.

(d) Where possible, any provision that is unenforceable, or partly unenforceable, must be severed as much as is needed to make the Deed enforceable, unless this would materially change the intended effect of this document.

(e) Each party, its staff and agents must do anything (including execute any document) that the other party might reasonably require to give full effect to this Deed.

(f) If the Constructor is engaged after Sydney Water has executed this Deed, the Developer must:

  (i) provide the Constructor with a copy of the executed Developer Works Deed;

  (ii) ensure that the Constructor executes the Deed Poll (see Schedule 3);

  (iii) deliver the executed Deed Poll to Sydney Water before the Construction; and Commencement Notice is issued.

(g) The Developer Works Deed may be executed in counterparts.

Part C Executing this Deed

Executed as a deed

Date

SYDNEY WATER

SIGNED for **Sydney Water:**

Name of signatory	Signature of signatory

In the presence of:

Name of witness	Signature of witness

DEVELOPER

Company with more than one director or secretary

EXECUTED by

Name of director	Signature of director
Name of secretary	Signature of secretary

Company with a sole director and company secretary

EXECUTED by:

Name of sole director and company secretary	Signature of sole director and company secretary

Party executing under power of attorney

SIGNED for under power of attorney:

Name of attorney (who warrants authorisation to enter into this agreement)	Signature of attorney	Date of power of attorney
In the presence of:		
Name of witness	Signature of witness	

Party executing under delegated authority

SIGNED for under delegated authority:

Name of delegated person (who warrants authorisation to enter into this agreement)	Signature of delegated person	Position of delegated person and date of delegated authority
In the presence of:		
Name of witness	Signature of witness	

Partner to an unincorporated partnership

EXECUTED by on behalf of:

Name of partner	Signature of partner
In the presence of:	
Name of witness	Signature of witness

Sole trader/individual

SIGNED by:

Name of party	Signature of party
In the presence of:	
Name of witness	Signature of witness

WATER SERVICING COORDINATOR

Company with more than one director or secretary

EXECUTED by

Name of director	Signature of director
Name of secretary	Signature of secretary

Company with a sole director and company secretary

EXECUTED by:

Name of sole director and company secretary	Signature of sole director and company secretary

Party executing under power of attorney

SIGNED for under power of attorney:

Name of attorney (who warrants authorisation to enter into this agreement)	Signature of attorney	Date of power of attorney

In the presence of:

Name of witness	Signature of witness

Party executing under delegated authority

SIGNED for under delegated authority:

Name of delegated person (who warrants authorisation to enter into this agreement)	Signature of delegated person	Position of delegated person and date of delegated authority

In the presence of:

Name of witness	Signature of witness

Partner to an unincorporated partnership

EXECUTED by on behalf of:

Name of partner	Signature of partner
In the presence of:	
Name of witness	Signature of witness

Sole trader/individual

SIGNED by:

Name of party	Signature of party
In the presence of:	
Name of witness	Signature of witness

DESIGNER (To be Executed by the WSC signing on for Designer responsibility)

Company with more than one director or secretary

EXECUTED by

Name of director	Signature of director
Name of secretary	Signature of secretary

Company with a sole director and company secretary

EXECUTED by:

Name of sole director and company secretary	Signature of sole director and company secretary

Party executing under power of attorney

SIGNED for under power of attorney:

Name of attorney (who warrants authorisation to enter into this agreement) In the presence of:	Signature of attorney	Date of power of attorney
Name of witness	Signature of witness	

Party executing under delegated authority

SIGNED for under delegated authority:

Name of delegated person (who warrants authorisation to enter into this agreement) In the presence of:	Signature of delegated person	Position of delegated person and date of delegated authority
Name of witness	Signature of witness	

Partner to an unincorporated partnership

EXECUTED by on behalf of:

Name of partner	Signature of partner

In the presence of:

Name of witness	Signature of witness

Sole trader/individual

SIGNED by:

Name of party	Signature of party

In the presence of:

Name of witness	Signature of witness

CONSTRUCTOR

Company with more than one director or secretary

EXECUTED by

Name of director	Signature of director
Name of secretary	Signature of secretary

Company with a sole director and company secretary

EXECUTED by:

Name of sole director and company secretary	Signature of sole director and company secretary

Party executing under power of attorney

SIGNED for under power of attorney:

Name of attorney (who warrants authorisation to enter into this agreement)	Signature of attorney	Date of power of attorney

In the presence of:

Name of witness	Signature of witness

Party executing under delegated authority

SIGNED for under delegated authority:

Name of delegated person (who warrants authorisation to enter into this agreement)	Signature of delegated person	Position of delegated person and date of delegated authority

In the presence of:

Name of witness	Signature of witness

Partner to an unincorporated partnership

EXECUTED by on behalf of:

Name of partner	Signature of partner

In the presence of:

Name of witness	Signature of witness

Sole trader/individual

SIGNED by:

Name of party	Signature of party

In the presence of:

Name of witness	Signature of witness

Sydney WATER

Case Number: 189977

July 22, 2021

ROSE ATKINS RIMMER

Dear Sir/Madam

Property: **HERRING RD, Macquarie Park**
Your Reference: **41/24958/3A**
Plan Identification Number: 189977PW

Attached is the Potable Water Design Package for the property shown above. This package was received by us and dated June 10, 2021/Version No. 2. **You have indicated that this plan is for tendering purposes.** After you have engaged a Constructor and the following matters have been addressed, this plan can be used for construction. If there are any changes after tendering, you must give us the appropriate Project Variation documents.

For that package:

(a) The following costs will be invoiced to your Company at the finalisation of these works:

Cut-In and Connection
Our indicative minimum costs are shown below and are based on the hourly rate of $165.52 (including $15.05 GST) per person per hour. That is:

- Cut-In – 2 persons for an average of 5 hours (or $1655.20)
- Connection – 1 person for an average of 1 hour (or $165.52)
- Chlorination/Ozone – 2 persons for an average of 3 hours (or $993.12)

Additional audits – 1 person per hour (@ $165.52 per hour)
Contract Administration
This fee will be invoiced to your company at the current hourly rate of $165.52 (including $15.05 GST). It is for time spent by us during the design, construction, and connection phases of this work.

Notes:

- **An invoice can be issued for the above costs before finalisation. However, if costs are incurred after that invoice we will charge you at finalisation**
- **To obtain an invoice before finalisation, you must email your Case Manager**
- **The Tax Invoice must be paid to us within 30 days of being issued**
- **You should tell your developer/applicant client of these our costs before proceeding with this work.**

(b) If we need additional site inspections, you will be invoiced at the current hourly rate at the completion of this work.

(c) At the finalisation of these works, and before we can issue the Section 73 Compliance Certificate or the release of the Security Bond, the Developer will need to pay any outstanding Developer (DSP) and Operational charges **directly to us**. Remember that you need to obtain an invoice so these charges can be paid. The invoice can be obtained by contacting the Case Manager.

Connections

While connections to existing our assets are generally at the end of construction, the constructor, in conjunction with the Water Service Coordinator (WSC), must review the design prior to commencement of works and identify all connections to our existing assets. All connections at any stage of construction must only proceed after obtaining the appropriate approval from us.

All connections to our system are to be made at the completion of construction.

(d)

The Generic Asset Hazards/Conditions - At the Point of Connection, listed in the Provider Instructions, **must** be addressed in your Safe Work Plan and Environmental Management Plan.

Notes: No Easement Forms have been sent to Sydney Water for review, Design is conditionally approved, once easement plans have been reviewed by networks and make sure all clearances are met then construction can commence.

Remember that:

1. There are work environment hazards that include (but are not limited to) traffic and the closeness of other utility services.
2. All developers, constructors and individuals have an OH&S obligation and a duty of care when working near underground plant.
3. Any person who destroys, damages, or interferes with any of our asset is liable to compensate us.

(e) Extra hold points might be included in the ITP by us when you lodge the Construction Commencement Notice.

Construction Commencement Sydney Water Contact

You must send your Construction Commencement Notice to our SWConnect as set down in the Instructions to WSC's (Major Works).

END

20th August 2021

Land Development Certificates Pty Ltd
7/76 Henry Street
Penrith NSW 2750

Attention: Eric Hausfeld

By email

Dear Eric Hausfeld

SSDA – 8903 Ivanhoe Estate
Condition B52

The Developer Frasers Property Ivanhoe (ACN 619 909 992) wish to advise Land Development Certificates Pty Ltd that we intend to continue the with FiberPro Pty Ltd (trading as Fiber Corp) CAN 624 075 406 for the stage 3 subdivision (stage 1B civil works) in line with Telecommunications agreement signed 17th August 2020.

Should you have any queries please do not hesitate to contact me on 0434 034 371.

Regards,

Chris Koukoutaris
Senior Development Manager
Frasers Property Australia

DocuSign Envelope ID: 81482C85-680A-43FE-9FD2-AE44101CA068

Lawyers | McCullough Robertson

Telecommunications Agreement

Frasers Property Ivanhoe Pty Limited ACN 619 909 992

FiberPro Pty Ltd (trading as Fiber Corp) ACN 624 074 406

Level 32 MLC Centre 19 Martin Place Sydney NSW 2000 | GPO Box 462 Sydney NSW 2001 Australia | **ABN** 42 721 345 951
Telephone +61 2 8241 5600 | **Fax** +61 2 8241 5699

Offices Brisbane Sydney Melbourne Newcastle

mccullough.com.au

DocuSign Envelope ID: 81482C85-680A-43FE-9FD2-AE44101CA068

Table of contents

Parties **1**

Background **1**

Agreed terms **1**

1 Definitions and interpretation **1**

1.1 Definitions 1

1.2 Interpretation 7

2 Conditions Precedent **8**

2.1 Conditions Precedent 8

2.2 Parties must co-operate 8

2.3 Waiving Conditions Precedent 9

2.4 Termination if conditions not fulfilled 9

2.5 Effect of failing to satisfy Condition Precedent 9

3 Term **9**

4 Design **9**

4.1 Design for Pit and Pipe Network, Headworks and Network 9

4.2 Design of Backhaul 10

4.3 Submission of Draft Network Design and Specifications for each Stage 10

4.4 Approval of Draft Network Design and Specifications 10

4.5 Final Network Design or Specifications 11

5 Installation and construction **11**

5.1 Pit and Pipe Network construction 11

5.2 Headworks installation 12

5.3 Backhaul installation 12

5.4 Network installation for each Stage 12

5.5 Site Access 12

5.6 Safety and conduct on Site 12

5.7 Cooperation with Developer and builder 12

5.8 Practical Completion 12

5.9 Liquidated damages for delays in Practical Completion 13

5.10 Ownership of Network 13

5.11 Customer cabling and equipment 13

5.12 Headworks and Communications Room Licences 13

DocuSign Envelope ID: 81482C85-680A-43FE-9FD2-AE44101CA068

6 Agreement with Owners Corporations 13

6.1 Continuing obligations for benefit of Owners Corporation 13

6.2 Agreements with Owners Corporation 14

6.3 Owners risk and liability of access 14

6.4 Changes to charges 14

6.5 Provisions to Benefit Owners Corporation 14

6.6 Developer's obligation to assist 14

7 Connecting End Users 14

7.1 Connection requests 14

7.2 Waived connection charge for connection of each Lot 14

8 Retail Service Providers 15

8.1 Panel of Retail Service Providers 15

8.2 Default Retail Service Provider requirements 15

8.3 Selection of Default Retail Service Provider 15

9 Network operation and maintenance 16

9.1 Ongoing operation of Network 16

9.2 Ongoing maintenance of Network 16

9.3 Cost of operations and maintenance 16

9.4 Chargeable maintenance works 16

9.5 Non-chargeable maintenance works 16

10 Provision of Wholesale Services 16

11 Payment 17

12 Governance arrangements 17

12.1 Meetings and collaboration 17

12.2 Record-keeping 17

13 Intellectual Property Rights 17

13.1 Ownership 17

13.2 Assignment 18

13.3 Licence 18

13.4 IPR in Confidential Information 18

13.5 IPR Claims 18

13.6 Remedial action 19

14 Indemnities 19

15 Insurance 19

16 Force Majeure 19

DocuSign Envelope ID: 81482C85-680A-43FE-9FD2-AE44101CA068

16.1 Notice and suspension of obligations 19
16.2 Effort to overcome 20
16.3 Termination 20

17 Disputes 20

18 Default Event and Termination 20
18.1 Default Events 20
18.2 Condition of this document 21
18.3 Consequences of a Default Event 21
18.4 Affirmation does not waive breach 21
18.5 Termination in other circumstances 21
18.6 Consequences of termination 21
18.7 Consequences for other arrangements 21

19 Confidentiality 22
19.1 Disclosure and use 22
19.2 Exclusion 22
19.3 Permitted disclosure 22
19.4 Injunctive relief 22
19.5 Return, destruction or deletion 22
19.6 Continuing obligation of confidence 23

20 Warranties 23
20.1 Title and capacity 23
20.2 Carrier licence, approvals and equipment 23

21 GST 24
21.1 Definitions 24
21.2 GST exclusive 24
21.3 Taxable Supply 24
21.4 Later GST change 24
21.5 Reimbursement or indemnity 24
21.6 Warranty that Tax Invoice is issued regarding a Taxable Supply 25
21.7 Progressive or Periodic Supplies 25

22 General 25
22.1 Amendments 25
22.2 Approval and consent 25
22.3 Assignment 25
22.4 Counterparts 25
22.5 Entire agreement 25
22.6 Costs 25

DocuSign Envelope ID: 81482C85-680A-43FE-9FD2-AE44101CA068

22.7 Further assurances 26

22.8 Governing law and jurisdiction 26

22.9 No merger 26

22.10 No waiver 26

22.11 Non-revocation of power of attorney 26

22.12 Relationship between the parties 26

22.13 Severability 26

22.14 Subcontractors 26

23 Notice 27

23.1 Method of giving notice 27

23.2 When is notice given 27

23.3 Address for notices 28

23.4 Some email notices must also be delivered by another method 28

Execution 29

Schedule 1 30

Schedule 2 31

Minimum Network Capabilities (clause 4.1) 31

Schedule 3 33

Development Concept Plan, Stages and Dates for Practical Completion 33

Schedule 4

..... 35

Network Diagram 35

Annexure 5 36

FibreCorp quote (clause 4.5) 36

Annexure 6 37

Access Licence (clause 6.2) 37

DocuSign Envelope ID: 81482C85-680A-43FE-9FD2-AE44101CA068

Lawyers | McCullough Robertson

Telecommunications Agreement

Dated

Parties

Developer	**Frasers Property Ivanhoe Pty Limited ABN 23 619 909 992**
	of Level 2, 1C Homebush Bay Drive, Rhodes NSW 2138
Carrier	**FiberPro Pty Ltd (trading as Fiber Corp) ABN 96 624 074 406**
	of 40 Culver Street, Monterey NSW 2217

Background

A Carrier holds a carrier licence under the *Telecommunications Act 1997* (Cth) and is an expert in the design, installation and operation of optical fibre networks suitable for transmission of telecommunications and associated services.

B Developer (and its related entities) are part of a diversified property group which develops, constructs and sells or leases properties in residential, retail, commercial and industrial developments, and intends to develop and construct retail, commercial and community buildings and amenities at the Site.

C Following a tender process, Developer wishes to appoint Carrier to design, install, own and operate a fibre telecommunications network for Stages 1A and 1B of a development at the Site. The Developer may also appoint the Carrier to design, install, own and operate a fibre telecommunications network in some or all of the subsequent Stages of the development.

D This document sets out the terms of the parties' agreement relating to the design, installation, ownership and operation of the Backhaul, Headworks and Network in the Stages 1A and 1B (and potentially at other Stages) at the Site, and related matters.

Agreed terms

1 Definitions and interpretation

1.1 Definitions

In this document:

Term	Definition
Authorisation	means: (a) an approval, authorisation, consent, declaration, exemption, notarisation, licence, quota, permit or waiver, however described, and any condition attaching to it;

DocuSign Envelope ID: 81482C85-680A-43FE-9FD2-AE44101CA068

Term	Definition
	(b) in the context of anything that could be prohibited or restricted by law if a Government Agency acts in any way within a specified period, the expiry of that period without that action being taken, including any renewal or amendment.
Backhaul	means the telecommunications infrastructure and service connecting the Network to Carrier's broader telephone network and the internet. (See the diagram in Schedule 4.)
Business Day	means a day that is not a Saturday, Sunday or public holiday in Sydney.
Carrier Existing Materials	means Existing Materials of Carrier provided to Developer in connection with this document
Change of Control	means, for a corporation, a change in: (a) Control of the composition of the board of directors of the corporation; (b) Control of more than half the voting rights attaching to shares of the corporation; or (c) Control of more than half the issued shares of the corporation (not counting shares that carry no right to participate beyond a specified amount in the distribution of either profit or capital).
Claim	means any claim, action, proceeding or demand, however it arises and whether it is present or future, fixed or unascertained, actual or contingent.
Commencement Date	means the date the last party executes this document
Communications Room	means a room or enclosure in a building allowing for the secure location of a Network Termination Device and the connection of in-building cabling from each Lot in the building to Carrier's Network. (See the diagram in Schedule 4.)
Conditions Precedent	has the meaning set out in clause 2.1.
Confidential Information	means all information (regardless of its form or the medium on which it is stored) of a confidential, sensitive, non-public or proprietary nature which relates to the business or affairs of a party or any customer or partner of a party disclosed or to be disclosed or made available by a party, including, without limitation: (a) the existence and terms of this deed; (b) know-how, trade secrets, concepts, business methods, technical and operational information; (c) developments relating to existing and future products, customer details or any third party agreements or arrangements; and

DocuSign Envelope ID: 81482C85-680A-43FE-9FD2-AE44101CA068

Term	Definition
	(d) any documents entered into by the Recipient and the Discloser in respect of the Permitted Purpose.
Control	means an ability to control and includes control that can be exercised as a result of, by means of, or by the revocation or breach of: (a) a trust; (b) an agreement; (c) a practice; or (d) or any combination of (a), (b) or (c), whether or not the arrangement is enforceable and regardless of whether the ability to control is express or implied, formal or informal or exercisable alone or jointly with someone else.
Date for Practical Completion	for a Stage, is the date specified for that Stage in Schedule 3, or as revised from time to time by Developer by written notice to Carrier.
Default Event	has the meaning set out in clause 18.1.
Developed Materials	means Materials created in connection with this document that are not Existing Materials.
Developer Existing Materials	means Existing Materials of Developer provided to Carrier in connection with this document
Development Concept Plan	for a Stage, means the development concept plan for that Stage: (a) included in Schedule 3; or (b) updated by Developer from time to time.
Discloser	means the party disclosing Confidential Information to the Recipient.
Draft Network Design and Specifications	has the meaning set out in clause 4.3.
Existing Materials	means Materials that existed on the Commencement Date.
Force Majeure Event	means any occurrence or omission outside a party's reasonable control, as a direct or indirect result of which the party relying on the event is prevented from or delayed in performing its obligations under this document (other than a payment obligation), and includes: (a) a physical natural disaster including fire, flood, lightning or earthquake; (b) war or other state of armed hostilities (whether war is declared or not), insurrection, riot, civil commotion, act of public enemies, national emergency (whether in fact or in law) or declaration of martial law;

DocuSign Envelope ID: 81482C85-680A-43FE-9FD2-AE44101CA068

Term	Definition
	(c) epidemic or quarantine restriction; (d) ionising radiation or contamination by radioactivity from any nuclear waste or from combustion of nuclear fuel; (e) confiscation, nationalisation, requisition, expropriation, prohibition, embargo, restraint or damage to property by or under the order of any Government Agency; (f) law taking effect after the date of this document; and (g) strike, lock-out, stoppage, labour dispute or shortage including industrial disputes that are specific to a party or the party's subcontractors.
GST Act	means *A New Tax System (Goods and Services Tax) Act 1999* (Cth).
Government Agency	means: (a) a government or government department or other body; (b) a governmental, semi-governmental or judicial person; or (c) a person (whether autonomous or not) who is charged with the administration of a law.
Headworks	means the structure, facilities and equipment at the Site enabling the connection of the Network to the Backhaul, as upgraded or replaced from time to time. (See the diagram in Schedule 4.)
Insolvency Event	means any of the following events: (a) a controller (as defined in the Corporations Act) is appointed to the party, or over any of the property of the party; (b) a party enters into, or any step is taken that could result in the party entering into, provisional liquidation, liquidation or administration (as defined in section 9 Corporations Act); (c) the party commits an act of bankruptcy under section 40 Bankruptcy Act; (d) the party becomes an insolvent under administration (as defined in section 9 Corporations Act) or takes steps that could result in the party becoming so; (e) the party is unable to pay its debts when they become due and payable; (f) the party ceases to carry on business; (g) the party suspends payment of its debts, or a class of its debts, or threatens to do so, other

DocuSign Envelope ID: 81482C85-680A-43FE-9FD2-AE44101CA068

Term	Definition
	than a debt which the other party is satisfied is the subject of a genuine dispute; (h) the party makes a statement, or conducts itself in a manner, from which it may reasonably be deduced that the party is insolvent; (i) the party makes a statement, or conducts itself in a manner, from which it may reasonably be deduced that a director of the party is seeking to take advantage of the safe harbour against insolvent trading available under Division 3, Part 5.7B Corporations Act; or (j) any event happens in Australia or any other country or territory in respect of a party that is similar to any of the events or circumstances referred to in this definition. Any event that takes place as part of a solvent reconstruction, amalgamation, merger, or consolidation, on terms approved in writing by the other party beforehand and in compliance with those terms is excluded from this definition.
Intellectual Property Rights or **IPR**	means all industrial and intellectual property rights, both in Australia and throughout the world, and includes any copyright, moral right, patent, registered or unregistered trade mark, registered or unregistered design, registered or unregistered plant breeder's right, trade secret, knowhow, right in relation to semiconductors and circuit layouts, trade or business or company name, indication or source or appellation of origin or other proprietary right, or right of registration of such rights.
IPR Claim	has the meaning set out in clause 13.5.
LAHC	means Land and Housing Corporation, a statutory body established under the *Housing Act 2001* (NSW).
Liabilities	includes liabilities, duties and obligations of any nature affecting the person concerned, however arising, including penalties, fines and interests, and including those which are prospective or contingent and those the amount of which for the time being is not ascertained or ascertainable.
Liquidated Damages	means the amount specified in Schedule 1.
Liquidated Damages Cap	means the maximum amount of Liquidated Damages in aggregate payable for a Stage specified in Schedule 1.
Losses	includes losses, damages, costs, expenses and liabilities, however arising, including those that are prospective or contingent and those the amount of which is not ascertained or ascertainable, and includes loss of profit or expected profit, and diminution in value.

DocuSign Envelope ID: 81482C85-680A-43FE-9FD2-AE44101CA068

Term	Definition
Lot	means each strata lot in a strata scheme at the Site registered or to be registered with the relevant land titles office under the *Strata Schemes Development Act, 2015* (NSW).
Material	includes software, source code, object code, designs, test cases, documents, equipment, reports, technical information, customer lists, studies, plans, charts, drawings, calculations, tables, trade marks, logos, schedules, telemetry data and data stored by any means.
Maximum Network Connection Charge	has the meaning set out in Schedule 1.
Mediation Rules	means the Resolution Institute Mediation Rules 2016.
NBN	means the National Broadband Network operated by NBN Co Limited.
Network	means the fibre optic telecommunications network to be designed, installed and operated at the Site under this agreement and includes any infrastructure up to and including the relevant access points for the provision of the Wi-Fi Services. (See the diagram in Schedule 4.)
Network Termination Device	means equipment that allows for the connection of in-building cabling from a Lot to the Network. (See the diagram in Schedule 4.)
On-Board	means doing all things necessary to allow the relevant Retail Service Provider to acquire Wholesale Services from Carrier and supply Retail Services to Lots in the relevant Stage, including executing any necessary agreements and performing any necessary systems interaction.
Owners Corporation	has the meaning set out in clause 6.1.
Permitted Purpose	means the performance of obligations or the exercise of rights under this document, or an agreement between Carrier (or its Related Entity) and a Related Entity of Developer.
Pit and Pipe Network	means the network of trenches and conduits required at the Site for a Stage to install the Network.
Point of Presence	means the point on Carrier's existing telecommunications network to which the Backhaul is or will be connected. (See the diagram in Schedule 4.)
Practical Completion	has the meaning set out in clause 5.8.
Progressive or Periodic Supply	means a Taxable Supply that satisfies the requirements of section 156-5 GST Act.
Property Development Agreement	means the document titled '*Project Development Agreement – Communities Plus: Ivanhoe Estate*' dated 11 August 2017 between LAHC, Frasers Property Ivanhoe Pty Limited and Frasers Property Limited as

DocuSign Envelope ID: 81482C85-680A-43FE-9FD2-AE44101CA068

Term	Definition
	varied by the document titled '*Deed of Variation #1 – Communities Plus: Ivanhoe Estate*' dated 1 April 2019 between LAHC, Frasers Property Ivanhoe Pty Limited and Frasers Property Limited.
Recipient	means the party receiving Confidential Information from the Discloser.
Related Entity	of a body corporate means a 'related body corporate' of that body corporate under section 9 *Corporations Act 2001* (Cth).
Retail Service Provider	means a carriage service provider (as defined in *Telecommunications Act 1997* (Cth)) who provides (or wishes to provide) Retail Services to Lots at the Site.
Retail Services	means telecommunications and related services supplied directly to end users at Lots at the Site.
Resolution Institute	means the Resolution Institute ACN 008 651 232, a company limited by guarantee, and any successor organisation.
Site	means the LAHC property at Ivanhoe Road, Macquarie Park NSW comprising Lot 100 DP 1262209and (if transferred to LAHC) Lot 1 in DP 859537, with respect to which Land and Housing Corporation has appointed Developer as developer under the Property Development Agreement.
Stage	means a stage specified in the Development Concept Plan, as updated and revised from time to time by Developer by written notice to Carrier.
Supplier	means the entity making the Supply.
Wholesale Service	means telecommunications and related services supplied to a Retail Service Provider with respect to a Lot at the Site.
Wi-Fi Services	means wireless internet connectivity provided via access points connected to the Network in accordance with Wi-Fi standards

1.2 Interpretation

In this document:

(a) a reference to a clause, schedule, annexure or party is a reference to a clause of, and a schedule, annexure or party to, this document and references to this document include any schedules or annexures;

(b) a reference to a party to this document or any other document or agreement includes the party's successors, permitted substitutes and permitted assigns;

(c) if a word or phrase is defined, its other grammatical forms have a corresponding meaning;

DocuSign Envelope ID: 81482C85-680A-43FE-9FD2-AE44101CA068

(d) a reference to a document or agreement (including a reference to this document) is to that document or agreement as amended, supplemented, varied or replaced;

(e) a reference to this document includes the agreement recorded by this document;

(f) a reference to legislation or to a provision of legislation (including subordinate legislation) is to that legislation as amended, re-enacted or replaced, and includes any subordinate legislation issued under it;

(g) if any day on or by which a person must do something under this document is not a Business Day, then the person must do it on or by the next Business Day;

(h) a reference to a person includes a corporation, trust, partnership, unincorporated body, government and local authority or agency, or other entity whether or not it comprises a separate legal entity; and

(i) a reference to 'month' means calendar month.

2 Conditions Precedent

2.1 Conditions Precedent

It is a condition of this document that the following conditions (**Conditions Precedent**) are satisfied:

(a) Carrier must On-Board at least 12 Retail Service Providers to sell Retail Services on the Network (calculated in accordance with clause 8.1(b));

(b) Carrier must appoint one of those Retail Service Providers as the Default Retail Service Provider for Stages 1A and 1B in accordance with clause 8.3; and

(c) Carrier must execute a terms sheet with that Retail Service Provider consistent with the minimum requirements for the Default Retail Service Provider set out in clause 8.2.

2.2 Parties must co-operate

Each party must:

(a) cooperate with the other and use reasonable endeavours to enable Carrier to satisfy the conditions in clause 2.1 as soon as is reasonably possible;

(b) sign and deliver all documents and instruments and do everything necessary or desirable to carry out its obligations under clause 2;

(c) take no action that might prevent or hinder the satisfaction of the Conditions Precedent;

(d) keep the other party regularly informed of the status of any discussions or negotiations with relevant third parties about the Conditions Precedent; and

(e) promptly notify the other party on becoming aware of the satisfaction of any Conditions Precedent or of any Conditions Precedent becoming incapable of being satisfied.

DocuSign Envelope ID: 81482C85-680A-43FE-9FD2-AE44101CA068

2.3 Waiving Conditions Precedent

The Conditions Precedent contained in clause 2.1 are for the benefit of Developer and may only be waived by Developer.

2.4 Termination if conditions not fulfilled

(a) If

(i) by the date 6 months before the Date for Practical Completion of Stage 1A or another date the parties agree in writing, Developer does not receive written notice of satisfaction of the Condition Precedent in clause 2.1(a); or

(ii) by the date 3 months before the Date for Practical Completion of Stage 1A or another date the parties agree in writing, Developer does not receive written notice of satisfaction of the Conditions Precedent in clauses 2.1(b) and 2.1(c),

Developer must:

(iii) waive satisfaction of the relevant Conditions Precedent that are not fulfilled (to the extent they are capable of waiver); or

(iv) by written notice to the other party, terminate this document.

(b) This agreement remains in effect until Developer gives notice under clause 2.4(a)(iii) or 2.4(a)(iv).

2.5 Effect of failing to satisfy Condition Precedent

If this document is terminated under clause 2.4, this document terminates and it is of no further effect except for clause 2.

3 Term

This document starts on the Commencement Date and continues in force until the date of the first annual general meeting of the Owners Corporation(s) established for the strata buildings in the final Stage at the Site, unless terminated earlier under clause 2.4, 4.4(e)(ii), 16.3, 18.3(b) or 18.5.

4 Design

4.1 Design for Pit and Pipe Network, Headworks and Network

(a) Carrier must design the Pit and Pipe Network for the whole Site.

(b) Carrier must design the Headworks.

(c) For Stages 1A and 1B, and for any other Stage which Developer notifies to Carrier in writing that Developer wishes Carrier to design and install the Network for that Stage, Carrier must design the Network for that Stage.

(d) All designs required under this clause must:

(i) meet or exceed the minimum requirements set out in Schedule 2;

DocuSign Envelope ID: 81482C85-680A-43FE-9FD2-AE44101CA068

(ii) be fit for purpose and prepared with due care and skill; and

(iii) be submitted to Carrier in accordance with and on or before the deadline specified in clause 4.3.

(e) On request from Carrier, Developer must provide Carrier with details of the intended location at the Site of the Headworks and the Communications Room for any proposed building at the Site to enable the Carrier to undertake any design work required by this clause.

4.2 Design of Backhaul

Carrier must design the Backhaul so as to ensure that the Headworks, Network and Wholesale Services are all able to meet or exceed the minimum requirements set out in Schedule 2. For clarity, Carrier is not required to provide the design of the Backhaul to Developer for comment or approval. However, the Carrier must design the Backhaul in accordance with any requirements notified by Developer with respect to where the Backhaul should enter the Site.

4.3 Submission of Draft Network Design and Specifications for each Stage

Carrier must submit its proposed design documentation and technical specifications (**Draft Network Design and Specifications**) for:

(a) the Pit and Pipe Network for the whole Site at least 7 months before the Date for Practical Completion of Stage 1A;

(b) the Headworks at least 7 months before the Date for Practical Completion of Stage 1A; and

(c) for the Network for a Stage, 7 months before the Date for Practical Completion of that Stage.

4.4 Approval of Draft Network Design and Specifications

(a) Within 20 Business Days of receiving any Draft Network Design and Specifications submitted under clause 4.3, Developer may either:

(i) provide written notice to Carrier accepting the Draft Network Design and Specifications; or

(ii) provide written comments on the Draft Network Design and Specifications to Carrier of any aspects of the Draft Network Design and Specifications that are unsatisfactory to Developer.

(b) If Developer provides written comments under clause 4.4(a)(ii), the parties must meet and negotiate (acting reasonably) any changes to the Draft Network Design and Specifications to take account of Developer's comments.

(c) If the parties are unable to agree on changes to the Draft Network Design and Specifications, they must attempt to resolve the dispute in accordance with clause 17.

(d) Despite Developer's ability to make comments and negotiate changes to the Draft Network Design and Specifications, Carrier acknowledges that Developer is relying on Carrier's expert knowledge, skill and expertise. The obligation to ensure the Final Network Design and Specifications complies with clause 4.1(d) remains with Carrier at all times and despite any comments or input from Developer.

DocuSign Envelope ID: 81482C85-680A-43FE-9FD2-AE44101CA068

(e) If the parties have not agreed changes to the Draft Network Design and Specifications within 20 Business Days of Developer providing comments under clause 4.4(a)(ii), Developer may give notice to Carrier either:

(i) accepting the Draft Network Design and Specifications originally submitted under clause 4.3; or

(ii) terminating this agreement with immediate effect,

but the parties must continue to negotiate the proposed changes until Developer gives either notice under this clause 4.4(e).

4.5 Final Network Design or Specifications

The Final Network Design and Specifications for a Stage are:

(a) the Draft Network Design and Specifications as submitted under clause 4.3, if Developer gives notice accepting them under clause 4.4(a)(i) or 4.4(e)(i); or

(b) otherwise, the Draft Network Design and Specifications agreed by the parties under clause 4.4(b) or following resolution of their dispute under clause 4.4(c).

The Final Network Design and Specifications must be consistent with (and, where the context allows, incorporate all relevant provisions of) Annexure A.

5 Installation and construction

5.1 Pit and Pipe Network construction

(a) Developer must ensure that that the Pit and Pipe Network is constructed in accordance with its Final Network Design and Specifications, at Developer's cost.

(b) For clarity, nothing in this agreement requires Developer to undertake any works other than at the Site. Any trenches, pits or pipes required for Carrier to connect the Site to its Backhaul is Carrier's responsibility and at Carrier's cost.

(c) Developer must complete construction of the Pit and Pipe Network, and give Carrier notice of completion, on or before the date that is 2 months before the Date for Practical Completion of Stage 1A.

(d) Carrier must inspect the Pit and Pipe Network within 5 Business Days of receiving the notice of completion from Developer.

(e) Upon inspecting the Pit and Pipe Network under clause 5.1(d), if Carrier determines (acting reasonably) that the Pit and Pipe Network is:

(i) satisfactory, it must confirm its satisfaction to Developer by written notice; or

(ii) not satisfactory, it must notify Developer of any further works reasonably required to complete the Pit and Pipe Network.

(f) Developer must complete the additional reasonable works notified under clause 5.1(e)(ii) and give Carrier a further notice under clause 5.1(c) when it has done so.

DocuSign Envelope ID: 81482C85-680A-43FE-9FD2-AE44101CA068

(g) Any dispute as to the satisfactory completion of the Pit and Pipe Network is to be dealt with under clause 17.

5.2 Headworks installation

Carrier must ensure that the Headworks is constructed in accordance with its Final Network Design and Specifications on before the Date for Practical Completion of Stage 1A.

5.3 Backhaul installation

Carrier must ensure that the Backhaul is in place and connected to the Headworks and Carrier's Point of Presence on or before the Date for Practical Completion of Stage 1A.

5.4 Network installation for each Stage

After the Pit and Pipe Network has been constructed satisfactorily under clause 5.1, Carrier must construct and install the Network for a Stage (including Network Termination Devices in each Communications Room in that Stage) in accordance with the Final Network Design and Specifications for the Network for that Stage and connect the Network to the Headworks and the Backhaul, on or before the Date for Practical Completion of that Stage.

5.5 Site Access

Developer grants Carrier the right to enter the Site as required to fulfil its obligations under clauses 5.2 and 5.4, including the right to dig and disturb the soil and undertake any other works required on the Site. Developer may suspend or withdraw this right, or make this right subject to conditions, in Developer's sole discretion, if Carrier fails to comply with clause 5.6.

5.6 Safety and conduct on Site

While on the Site, Carrier must ensure that it and its employees, sub-contractors and subcontractor's employees comply at all times with all occupational health and safety requirements applicable at the Site, including:

(a) applicable safety legislation;

(b) any safety plan or rules determined by or on behalf of Developer that apply at the Site; and

(c) any reasonable directions given by Developer or Developer's representatives relating to safety at the Site.

5.7 Cooperation with Developer and builder

Carrier must cooperate at all times with Developer and Developer's representatives in coordinating access to and work on the Site.

5.8 Practical Completion

Practical Completion of the Network for a Stage occurs when the Carrier certifies in writing that the Network for that Stage (and, for Stage 1A, the Headworks and Backhaul):

(a) has been installed and connected in accordance with the relevant Final Network Design and Specifications;

DocuSign Envelope ID: 81482C85-680A-43FE-9FD2-AE44101CA068

(b) has been tested as operating successfully from Carrier's point of presence to the Network Termination Device(s) for buildings in that Stage; and

(c) meets or exceeds the requirements specified in requirements set out in Schedule 2.

5.9 Liquidated damages for delays in Practical Completion

(a) Carrier must pay Developer the Liquidated Damages for each day or part-day after the Date for Practical Completion of that Stage until Carrier reaches Practical Completion of the Network for that Stage, up to the Liquidated Damages Cap.

(b) Carrier acknowledges that the Liquidated Damages are a genuine and reasonable pre-estimate of Developer's loss caused by the delay.

(c) Developer agrees that the Liquidated Damages are its sole remedy for any delay in reaching Practical Completion, except that if clause 5.9(a) is found to be void, unenforceable or inoperative for any reason, this clause 5.9(c) does not apply.

(d) Any delay in Practical Completion of any one of the Backhaul, the Headworks or the Network for Stage 1A is treated as a failure to reach Practical Completion of Stage 1A for the purposes of this clause.

5.10 Ownership of Network

(a) Until Practical Completion of the Network for a Stage, the infrastructure forming part of that Network belongs to Developer.

(b) On and from Practical Completion, ownership of the Network passes to Carrier.

5.11 Customer cabling and equipment

(a) Developer acknowledges that the Network Design and Specifications and Carrier's obligation to install the Network do not extend to any in-building cabling on the customer side of the Optical Network Device(s) installed at the boundary of the Network.

(b) Despite clause 5.11(a), for each Stage for which Carrier has installed the Network under clause 5.4, Carrier must (at Carrier's cost) install a new compatible wi-fi router in each Lot of that Stage on or before its Date for Practical Completion. Title in the router passes to the owner or occupier of the relevant Lot when that Lot is connected to the Network under clause 7.1

5.12 Headworks and Communications Room Licences

Until an owners corporation is established for any strata building in which the Headworks or a Communications Room is located, Developer grants Carrier a licence to occupy and enter the Headworks or that Communications Room in order to perform its obligations under this agreement.

6 Agreement with Owners Corporations

6.1 Continuing obligations for benefit of Owners Corporation

Where one or more owners corporations are established for the whole or part of a building in a Stage (**Owners Corporations**), Carrier warrants to Developer that it will comply and continue to

DocuSign Envelope ID: 81482C85-680A-43FE-9FD2-AE44101CA068

comply with clauses 7 to 10 for the benefit of those Owners Corporations and of occupants of Lots in that Stage.

6.2 Agreements with Owners Corporation

Carrier must enter into an agreement in the form of the Access Licence in Annexure B with any Owners Corporations established for the strata buildings in a Stage that resolves at the first annual general meeting of the Owners Corporation to enter into the Access Licence. Any change to the form of Access Licence must be agreed by Developer.

6.3 Owners risk and liability of access

Each agreement entered into under clause 6.2 must contain a provision to the effect that entry of Carrier and its representatives and employees onto, and presence within, the common property is at the risk of Carrier and those other persons, and which confers such indemnities in favour of the Owners Corporation and provisions for Carrier to have and maintain appropriate insurance, as the Owners Corporation requires, acting reasonably.

6.4 Changes to charges

The agreement entered into between Carrier and an Owners Corporation under clause 6.2 may provide for Carrier to increase the charges specified in Schedule 1 from time to time by notice to the Owners Corporation, provided that the increased charges are no greater than those charges as they apply to other customers or users of Carrier's fibre telecommunications networks and on the terms of the Access Licence. This clause does not permit Carrier to introduce charges at any time contrary to clause 9.5.

6.5 Provisions to Benefit Owners Corporation

For the avoidance of doubt, the provisions of clauses 6.1 to 6.4 are for the benefit of each Owners Corporation for the purpose of section 36C of the *Conveyancing Act 1919* (NSW).

6.6 Developer's obligation to assist

Developer agrees to cause the motion or motions to authorise each Owners Corporation to enter into the Access Licence to be placed on the notice paper for the first annual general meeting of that Owners Corporation. Developer must cause its representative to attend and address the first annual general meeting concerning the Access Licence and recommend that the Owners Corporation resolve to enter into the licence. However, Developer is under no obligation to vote in favour of the motion i.e., Developer may, in its absolute discretion, abstain from voting on the motion.

7 Connecting End Users

7.1 Connection requests

After Practical Completion of the Network for a Stage, Carrier must establish a fibre connection to the Network for a Lot in that Stage on request by a Retail Service Provider.

7.2 Waived connection charge for connection of each Lot

Carrier agrees that it will not charge a Network Connection Charge to the Retail Service Provider for a network connection for a Lot.

DocuSign Envelope ID: 81482C85-680A-43FE-9FD2-AE44101CA068

8 Retail Service Providers

8.1 Panel of Retail Service Providers

(a) Carrier must ensure that it has at all times On-Boarded at least 12 Retail Service Providers to supply Retail Services to Lots in any Stage that has reached Practical Completion of the Network.

(b) In calculating the number of On-Boarded Retail Service Providers, any Retail Service Providers who are Related Entities of each other are treated as if they were a single Retail Service Provider.

8.2 Default Retail Service Provider requirements

Carrier must ensure that the Default Retail Service Provider for a Stage:

(a) offers the owner or occupant of each Lot in the Stage 60 days of its fixed broadband Retail Service at no charge if the owner or occupant selects the Default Retail Service Provider as its first Retail Service Provider;

(b) does not charge a connection fee to the owner or occupier of a Lot who selects the Default Retail Service Provider as its first Retail Service Provider;

(c) offers, and continues to offer, to supply Retail Services to owners and occupants of Lots in the Stage on terms (including as to price, discounts, quality, service levels and inclusions) at least as favourable as its best plans and special offer available to some or all of its other customers (whether or not the same kind of customer);

(d) makes clear to owners and occupants of Lots in the Stage that the router pre-installed by Carrier will work with any Retail Service Provider if the owner or occupant of a Lot chooses a different Retail Service Provider;

(e) supplies its fixed broadband Retail Service to any community hall that is part of the Stage at no charge;

(f) supplies its fixed broadband Retail Service to any building manager appointed for a building in the Stage at no charge; and

(g) offers to supply its fixed broadband Retail Service to any school, Mission Australia premises and retail stores in the Stage for 12 months at no charge (subject to a maximum of six retail stores receiving the free service across all Stages for which it is the Default Retail Service Provider).

8.3 Selection of Default Retail Service Provider

(a) Carrier must provide a list of three On-Boarded Retail Service Providers for a Stage that it recommends to be the Default Retail Service Provider for that Stage within 20 Business Days of the acceptance or approval of the Final Network Design and Specifications for that Stage.

(b) Developer may choose one of the suggested Retail Service Providers or ask Carrier to provide a new list under clause 8.3(a), in Developer's sole discretion.

(c) Developer will notify Carrier of which Retail Service Provider it has selected as the Default Retail Service Provider.

DocuSign Envelope ID: 81482C85-680A-43FE-9FD2-AE44101CA068

(d) The appointment of the Default Retail Service Provider is subject to Carrier agreeing a terms sheet with that Default Retail Service Provider setting out at least the minimum requirements specified in clause 8.2.

(e) For clarity, Developer may choose different Default Retail Service Providers for different Stages at the Site.

(f) Developer may direct Carrier to provide a new list under clause 8.3(a) and choose a new Default Retail Service Provider for a Stage:

(i) if the current Default Retail Service Provider fails to comply with any of its minimum requirements under clause 8.2 and does not remedy that failure within 5 Business Days of receiving notice from Carrier or Developer to remedy; and

(ii) if at least three years have passed since Practical Completion of the Network for that Stage and at least three years have passed since the current Default Retail Service Provider was appointed for that Stage.

9 Network operation and maintenance

9.1 Ongoing operation of Network

Carrier must operate the Network and the Backhaul, and comply with all applicable legislation relating to the operation of the Network and the Backhaul, for the life of the Network and Backhaul.

9.2 Ongoing maintenance of Network

Carrier must maintain the Network, Headworks and Backhaul in good working condition and augment or upgrade the Network and Backhaul from time to time to maintain them in good working condition and meeting minimum requirements specified in Schedule 2 for the Wholesale Services provided over the Network and Backhaul.

9.3 Cost of operations and maintenance

Carrier must comply with clauses 9.1 and 9.2 at its own cost.

9.4 Chargeable maintenance works

Carrier must not charge a Retail Service Provider (or any other person) more than the amounts specified in Schedule 1 for maintenance work requested on the customer side of the Network Termination Device (i.e. not part of the Network and not covered by clauses 9.2 and 9.3).

9.5 Non-chargeable maintenance works

Carrier acknowledges that it is responsible for any repairs or restoration required as a result of third party damage to the Network, the Headworks or the Backhaul, and is not entitled to recover this from a Retail Service Provider or an end user of a Retail Service Provider.

10 Provision of Wholesale Services

10.1 Wholesale Services

Carrier must make available and continue to supply the Wholesale Services required to:

DocuSign Envelope ID: 81482C85-680A-43FE-9FD2-AE44101CA068

(a) meet the minimum requirements of the Wholesale Services specified in Schedule 2;

(b) allow the Default Retail Service Provider to meet its minimum obligations described in clause 8.2(c); and

(c) allow Retail Service Providers to provide a comparable range of Retail Services to retail service providers supplying retail services on the NBN from time to time.

10.2 Wi-Fi Services

Carrier must provide (or must arrange for the Default Retail Service Provider to provide) the Wi-Fi Services in common areas of any residential part of a building in a Stage and in the public areas of a Stage at no cost to the Owners Corporation or any end user, with access permitted to any end user subject to acceptance of and compliance with reasonable terms of use.

11 Payment

Not Used

12 Governance arrangements

12.1 Meetings and collaboration

The parties agree to meet at least once every 3 months to discuss matters relevant to the performance of their obligations under this document, and more often as agreed or necessary. This obligation continues for each Stage until the date that the purchase of the final Lot for a Stage has completed.

12.2 Record-keeping

Carrier must keep such records as are required to demonstrate its performance of its obligations under this agreement, including its continuing obligations under clauses 7 to 10, and retain individual records for at least seven years (or any longer period required by law).

13 Intellectual Property Rights

13.1 Ownership

Ownership of Intellectual Property Rights:

(a) in Developer Existing Materials remains with Developer;

(b) in Carrier Existing Materials remains with Carrier;

(c) in modifications to Developer Existing Materials (regardless of who modifies) belongs to Developer;

(d) in modifications to Carrier Existing Materials (regardless of who modifies) belongs to Carrier; and

(e) in Developed Materials to the extent not already covered by clauses 13.1(c) or 13.1(d) belong to the party that created them.

DocuSign Envelope ID: 81482C85-680A-43FE-9FD2-AE44101CA068

13.2 Assignment

(a) Carrier assigns to Developer the Intellectual Property Rights (including future Intellectual Property Rights) in any modifications made by or on behalf of Carrier (other than by Developer) to Developer Existing Materials.

(b) Developer assigns to Carrier the Intellectual Property Rights (including future Intellectual Property Rights) in any modifications made by or on behalf of Developer (other than by Carrier) to Carrier Existing Materials.

(c) Each of Carrier and Developer must sign all documents and do all things necessary to give effect to their respective assignments in this clause 13.2.

13.3 Licence

(a) Carrier grants Developer an irrevocable, royalty-free, non-transferable, worldwide licence (including the right to sublicense) to exercise the Intellectual Property Rights in Carrier Existing Materials (including modifications to them) and Developed Materials created by Carrier in connection with this document.

(b) Developer grants Carrier an irrevocable, royalty-free, non-transferable, worldwide licence (including the right to sublicense) to exercise the Intellectual Property Rights in Developer Existing Materials (including modifications to them) and Developed Materials created by Developer in connection with this document.

13.4 IPR in Confidential Information

Each party acknowledges that:

(a) as between the parties the Discloser retains the Intellectual Property Rights in and in connection with its Confidential Information; and

(b) nothing in this deed is intended to give the Recipient any Intellectual Property Rights or other rights in or in connection with the Discloser's Confidential Information.

13.5 IPR Claims

(a) A party receiving notice of a third party claim that any Existing Materials (including modifications) or Developed Materials in connection with this document infringe that third party's Intellectual Property Rights (**IPR Claim**) must promptly give notice of the IPR Claim to the other party.

(b) Where an IPR Claim relates to Developer Existing Material or Developed Material created by Developer, Carrier agrees to allow Developer (at Developer's cost) to have the carriage of any negotiations or litigation to that IPR Claim (including where the IPR Claim is brought against Carrier not Developer).

(c) Where an IPR Claim relates to Carrier Existing Material or Developed Material created by Carrier, Developer agrees to allow Carrier (at Carrier's cost) to have the carriage of any negotiations or litigation to that claim (including where the claim is brought against Developer not Carrier).

(d) Each party agrees not to make admissions in relation to any purported infringement of a third party's Intellectual Property Rights, nor compromise or settle any IPR Claim, without first advising the other party of their view of the other party's liability.

DocuSign Envelope ID: 81482C85-680A-43FE-9FD2-AE44101CA068

13.6 Remedial action

If any IPR Claim is made out relating to Carrier Existing Material or Developed Materials created by or on behalf of Carrier, Carrier must take any action reasonably necessary to ensure that the Network can continue to operate without such infringement.

14 Indemnities

Carrier indemnifies Developer against all loss or damage (including legal costs) incurred or suffered by Developer, however, caused, in connection with:

(a) personal injury or death of any person;

(b) loss of or damage to property; and

(c) any infringement of a third party's Intellectual Property Rights,

to the extent that injury, death, loss, damage or infringement was caused by Carrier's breach of this document or negligent act or omission.

15 Insurance

(a) Carrier must effect and maintain from a reputable insurance company:

(i) all insurances required by law, including worker's compensation insurance;

(ii) public liability insurance for an amount of at least $50 million per claim;

(iii) professional indemnity insurance for an amount of at least $20 million per claim; and

(iv) such other insurance as required by the Developer from time to time in respect of any liability of the Carrier that may arise from the performance or exercise of its obligations or rights under this document.

(b) Carrier must:

(i) maintain the insurance policies referred to in clause 15(a) in a form and for a policy period acceptable to Developer; and

(ii) if requested by Developer, give Developer copies of these insurance policies and evidence of currency of the policies.

16 Force Majeure

16.1 Notice and suspension of obligations

If a party to this document is affected, or likely to be affected, by a Force Majeure Event:

(a) that party must immediately give the other party notice of that fact including:

(i) full particulars of the Force Majeure Event;

DocuSign Envelope ID: 81482C85-680A-43FE-9FD2-AE44101CA068

(ii) an estimate of its likely duration;

(iii) the obligations affected by it and the extent of its effect on those obligations; and

(iv) the steps taken to rectify it; and

(b) the obligations under this document of the party giving the notice are suspended to the extent to which they are affected by the relevant Force Majeure Event, as long as the Force Majeure Event continues.

16.2 Effort to overcome

(a) Subject to clause 16.2(b) a party claiming a Force Majeure Event must use reasonable endeavours to remove, overcome or minimise the effects of that Force Majeure Event as quickly as possible.

(b) The party claiming a Force Majeure Event:

(i) need not contest the validity or enforceability of any law or regulation by way of legal proceedings; and

(ii) may act at its complete discretion when dealing with any industrial dispute that is specific to its own workforce.

16.3 Termination

If a Force Majeure Event continues for more than 3 months, either party may terminate this document by giving 1 month's notice to the other party.

17 Disputes

The parties must endeavour to settle any dispute in connection with this document by mediation if the dispute cannot be resolved promptly by senior representatives of the parties. The mediation is to be conducted by a mediator who is independent of the parties and appointed by agreement between the parties, or failing agreement within seven days of receiving any party's notice of dispute, by a person appointed by the Chair of Resolution Institute or the Chair's designated representative. The Mediation Rules apply to the mediation. It is a condition precedent to the right of either party to commence arbitration or litigation, other than for interlocutory relief, that they have first offered to submit the dispute to mediation.

18 Default Event and Termination

18.1 Default Events

Each of these events or circumstances is a Default Event:

(a) if a party fails to pay any amount due and payable by it under this document within thirty days after written demand for payment has been made by the non-defaulting party following the due date for payment;

(b) if a party fails to remedy any breach of its obligations under this document within seven days after a written demand for remedy has been made by another party;

(c) if an Insolvency Event occurs in respect of a party;

DocuSign Envelope ID: 81482C85-680A-43FE-9FD2-AE44101CA068

(d) if there is a Change of Control of a party;

(e) if any of the warranties or representations referred to in clause 20 are breached.

18.2 Condition of this document

It is a condition of this document that no Default Event occurs with respect to a party.

18.3 Consequences of a Default Event

If a Default Event occurs with respect to a party (**Defaulting Party**), the other party (**Non-defaulting Party**), in addition to any other rights that may be conferred upon it at law and in equity, may:

(a) affirm this document by written notice and retain the right to:

(i) sue the Defaulting Party for specific performance and damages; or

(ii) sue the Defaulting Party for damages in lieu of specific performance; or

(b) terminate this document by written notice and retain the right to sue the Defaulting Party for damages.

18.4 Affirmation does not waive breach

If the Default Event continues after a notice of affirmation is given under clause 18.3 (**Continuing Default Event**), the Non-defaulting Party may subsequently terminate this document under clause 18.3, and its affirmation of this document under clause 18.3 does not amount to a waiver of the Continuing Default Event.

18.5 Termination in other circumstances

If the Property Development Agreement is terminated for any reason, this document is terminated with effect from the date that termination of the Property Development Agreement takes effect.

18.6 Consequences of termination

On termination this document is at an end except for:

(a) enforcing any Claim, or enforcing any other right, which arises on or has arisen before termination;

(b) clause 18.6(b), clauses 6, 9, 13.2, 13.3, 13.5, 14, 15, 17, 19, 20, 21, 22 and 23 and any other clause expressed to survive termination of this document; and

(c) any other provisions of this document necessary for or incidental to the operation of those clauses.

18.7 Consequences for other arrangements

Termination of this document does not terminate any agreement between Carrier and a Owners Corporation or between Carrier and a Default Retail Service Provider.

DocuSign Envelope ID: 81482C85-680A-43FE-9FD2-AE44101CA068

19 Confidentiality

19.1 Disclosure and use

The Recipient must:

(a) keep the Confidential Information secure, in strict confidence and only use the Confidential Information for the Permitted Purpose;

(b) not make use of the Confidential Information to the commercial, financial or competitive disadvantage of the Discloser;

(c) not disclose or reproduce the Confidential Information, except with the prior written consent of the Discloser; and

(d) immediately notify the Discloser if it becomes aware of a breach of this document.

19.2 Exclusion

The obligations of confidence in clause 19.1 do not apply to Confidential Information that:

(a) is required to be disclosed by applicable law, or under compulsion of a court, or the listing rules of any stock exchange, as long as the Recipient has notified the Discloser in advance, fully cooperated with the Discloser in assessing the minimum disclosure requirements and reasonable protections for the disclosed Confidential Information, and limited the disclosure to the minimum amount required whilst maintaining those protections;

(b) is disclosed to a Related Entity of the Recipient for the Permitted Purpose; or

(c) is in the public domain except as a result of a breach of this document.

19.3 Permitted disclosure

If the Recipient discloses Confidential Information as permitted under this document, the Recipient must ensure that the person to whom the Confidential Information is disclosed complies with the requirements of clause 19.1 as if that person was the Recipient.

19.4 Injunctive relief

The Recipient acknowledges that:

(a) the Discloser may suffer financial and other loss and damage if any unauthorised act occurs in relation to its Confidential Information, and that monetary damages would be an insufficient remedy; and

(b) in addition to any other remedy available at law or in equity, the Discloser is entitled to injunctive relief to prevent a breach of, and to compel specific performance of clause 19.1.

19.5 Return, destruction or deletion

If:

DocuSign Envelope ID: 81482C85-680A-43FE-9FD2-AE44101CA068

(a) the Confidential Information of the Discloser is no longer required for the Permitted Purpose; or

(b) requested by the Discloser,

the Recipient's right to use the Confidential Information ceases and the Recipient must immediately:

(c) return to the Discloser;

(d) destroy or delete, and certify in writing to the Discloser the destruction or deletion of; or

(e) destroy or delete, and permit the Discloser to witness the destruction or deletion of,

all Confidential Information, as directed by the Discloser in its discretion.

19.6 Continuing obligation of confidence

The return, destruction or deletion of Confidential Information under clause 19.5 does not release the Recipient from its obligations under or in connection with this document.

20 Warranties

20.1 Title and capacity

Each party warrants that:

(a) it is validly existing under the laws of its place of incorporation or registration;

(b) it has the power to enter into and perform its obligations under this document;

(c) it has taken all corporate action and holds all Authorisations necessary or desirable to enable its entry into and performance of this document, and it is complying with any conditions attached to the Authorisations;

(d) its obligations under this document are enforceable against it under the terms of the document; and

(e) the execution, delivery and performance by it of this document (and any other document required to be entered into by it relating to this document) does not and will not:

(i) result in a breach of, or constitute a default under, any agreement or arrangement to which it is party or by which it is bound; or

(ii) result in a breach of any law or order, judgment or decree of any court or Government Agency or regulatory body by which it is bound.

20.2 Carrier licence, approvals and equipment

Carrier warrants to Developer (and repeats to Developer every day during the term of this document) that:

(a) it has a valid carrier licence under *Telecommunications Act 1997* (Cth);

DocuSign Envelope ID: 81482C85-680A-43FE-9FD2-AE44101CA068

(b) carriage services it supplies in connection with this document comply with all applicable requirements under *Telecommunications Act 1997* (Cth);

(c) it has obtained all Authorisations, approvals and consents required to perform its obligations under this document, including with respect to the Backhaul; and

(d) all equipment used or supplied under or in connection with this document is new, in good working order and subject to valid manufacturer's warranties.

21 GST

21.1 Definitions

Any terms capitalised in clause 21 and not already defined in clause 1.1 have the same meaning given to those terms in the GST Act.

21.2 GST exclusive

Except under clause 21, the consideration for a Supply made under or in connection with this document does not include GST.

21.3 Taxable Supply

If a Supply made under or in connection with this document is a Taxable Supply, then at or before the time any part of the consideration for the Supply is payable:

(a) the Recipient must pay the Supplier an amount equal to the total GST for the Supply, in addition to and in the same manner as the consideration otherwise payable under this document for that Supply; and

(b) the Supplier must give the Recipient a Tax Invoice for the Supply.

If a Supply made under or in connection with this document is a Taxable Supply, then at or before the time:

(c) any part of the consideration for the Supply is payable, the Recipient must pay the Supplier an amount equal to the GST relating to that part of the consideration for the Supply (in addition to and in the same manner as the consideration otherwise payable under this document at that time for that Supply); and

(d) any consideration for the Supply is payable, the Supplier must give the Recipient a Tax Invoice for the Supply.

21.4 Later GST change

For clarity, the GST payable under clause 21.3 is correspondingly increased or decreased by any subsequent adjustment to the amount of GST for the Supply for which the Supplier is liable, however caused.

21.5 Reimbursement or indemnity

If either party has the right under this document to be reimbursed or indemnified by another party for a cost incurred in connection with this document, that reimbursement or indemnity excludes any GST component of that cost for which an Input Tax Credit may be claimed by the

DocuSign Envelope ID: 81482C85-680A-43FE-9FD2-AE44101CA068

party being reimbursed or indemnified, or by its Representative Member, Joint Venture Operator or other similar person entitled to the Input Tax Credit (if any).

21.6 Warranty that Tax Invoice is issued regarding a Taxable Supply

Where a Tax Invoice is given by the Supplier, the Supplier warrants that the Supply to which the Tax Invoice relates is a Taxable Supply and that it will remit the GST (as stated on the Tax Invoice) to the Australian Taxation Office.

21.7 Progressive or Periodic Supplies

Where a Supply made under or in connection with this document is a Progressive or Periodic Supply, clause 21.3 applies to each component of the Progressive or Periodic Supply as if it were a separate Supply.

22 General

22.1 Amendments

This document may only be amended by written agreement between all parties.

22.2 Approval and consent

Where under this document the doing of any thing by a party is dependent on the consent or approval of another party, that consent or approval may not be unreasonably withheld nor unduly delayed, unless expressly provided otherwise.

22.3 Assignment

A party may only assign this document or a right under this document with the written consent of the other party whose consent may not be unreasonably withheld. However, the Developer may assign a right or interest in or under this document to an Owners Corporation, without Carrier's consent.

22.4 Counterparts

This document may be signed in any number of counterparts. All counterparts together make one instrument.

22.5 Entire agreement

(a) This document supersedes all previous agreements about its subject matter. This document embodies the entire agreement between the parties.

(b) To the extent permitted by law, any statement, representation or promise made in any negotiation or discussion, is withdrawn and has no effect except to the extent expressly set out or incorporated by reference in this document.

(c) Each party acknowledges and agrees that it does not rely on any prior conduct or representation by the other party in entering into this document.

22.6 Costs

Each party bears its own costs in relation to the preparation and signing of this document.

DocuSign Envelope ID: 81482C85-680A-43FE-9FD2-AE44101CA068

22.7 Further assurances

Each party must do all things reasonably necessary to give effect to this document and the transactions contemplated by it.

22.8 Governing law and jurisdiction

(a) New South Wales law governs this document.

(b) Each party irrevocably submits to the non-exclusive jurisdiction of the New South Wales courts and courts competent to hear appeals from those courts.

22.9 No merger

The rights and obligations of the parties under this document do not merge on completion of any transaction contemplated by this document.

22.10 No waiver

(a) The failure of a party to require full or partial performance of a provision of this document does not affect the right of that party to require performance subsequently.

(b) A single or partial exercise of or waiver of the exercise of any right, power or remedy does not preclude any other or further exercise of that or any other right, power or remedy.

(c) A right under this document may only be waived in writing signed by the party granting the waiver, and is effective only to the extent specifically set out in that waiver.

22.11 Non-revocation of power of attorney

Each person who executes this document on behalf of a party under a power of attorney declares that he or she is not aware of any fact or circumstance that might affect his or her authority to do so under that power of attorney.

22.12 Relationship between the parties

Unless expressly stated otherwise, this document does not create a relationship of employment, trust, agency or partnership between the parties.

22.13 Severability

(a) A clause or part of a clause of this document that is illegal or unenforceable may be severed from this document and the remaining clauses or parts of the clause of this document continue in force.

(b) If any provision is or becomes illegal, unenforceable or invalid in any jurisdiction, it is to be treated as being severed from this document in the relevant jurisdiction, but the rest of this document will not be affected.

22.14 Subcontractors

(a) Carrier may not appoint a subcontractor to perform any of its obligations under this document without Developer's prior written consent.

DocuSign Envelope ID: 81482C85-680A-43FE-9FD2-AE44101CA068

(b) Carrier may withdraw its consent at any time where Carrier's subcontractor fails to comply with any Developer's obligations under this document.

(c) Despite clause 22.14(b), in determining Carrier's compliance with or Developer's rights under this document, any act or omission of a subcontractor of Carrier is treated as an act or omission of Carrier.

23 Notice

23.1 Method of giving notice

A notice, consent or communication under this document is only effective if it is:

(a) in writing in English, signed by or on behalf of the person giving it;

(b) addressed to the person to whom it is to be given; and

(c) given as follows:

(i) delivered by hand to that person's address;

(ii) sent to that person's address by prepaid mail or by prepaid airmail, if the address is overseas;

(iii) sent by fax to that person's fax number where the sender receives a transmission confirmation report from the despatching machine indicating the transmission was made without error and showing the relevant number of pages and the correct destination fax number or name of recipient; or

(iv) sent by email to that person's email address unless the sender receives a computer generated report that the email was not successfully sent, within two hours after the email being sent.

23.2 When is notice given

A notice, consent or communication given under clause 23.1 is given and received on the corresponding day set out in the table below. The time expressed in the table is the local time in the place of receipt.

If a notice is	It is given and received on
Delivered by hand or sent by fax or email	(a) that day, if delivered by 5.00pm on a Business Day; or (b) the next Business Day, in any other case.
Sent by post	(a) three Business Days after posting, if sent within Australia; or (b) seven Business Days after posting, if sent to or from a place outside Australia.

DocuSign Envelope ID: 81482C85-680A-43FE-9FD2-AE44101CA068

23.3 Address for notices

A person's address and fax number are those set out below, or as the person notifies the sender:

Name	**Developer**
Attention	Chris Koukoutaris
Address	Level 2, 1C Homebush Bay Drive, Rhodes NSW 2138
Fax	(02) 9767 2944
Email address	chris.koukoutaris@fraserproperty.com.au

Name	**Carrier**
Attention	Sam Scoutas
Address	36 Ricketty Street, Mascot NSW 2020
Fax	N/A
Email address	sam@fiber-corp.com

23.4 Some email notices must also be delivered by another method

Despite clause 23.1(c)(iv), where a person uses email to give a notice of breach or termination of this agreement, that notice must also be given by hand or sent by fax or post to be valid. It is taken to be received when the copy of the notice given by hand or sent by fax or fast is taken to be received under clause 23.2.

DocuSign Envelope ID: 81482C85-680A-43FE-9FD2-AE44101CA068

Lawyers McCullough Robertson

Execution

EXECUTED as an agreement

Signed by
Frasers Property Ivanhoe Pty Limited
ABN 23 619 909 992 on 17 / 08 /20 by its duly authorised officer in the presence of:

DocuSigned by:
4F7168E389224AD...

Signature of witness

Scott Clohessy

Name of witness (print)

DocuSigned by:
Cameron Jackson
A93D6233F4384D3...

Signature of Authorised Officer

Cameron Jackson

Full Name of Authorised Officer

Office Held

Executed by
FiberPro Pty Ltd (trading as Fiber Corp)
ABN 96 624 074 406 on / /20 by:

Director

Full name of Director

~~Director/Secretary~~ CEO

SAM SCOUTAS

Full name ~~of Director/Secretary~~ CEO

DocuSign Envelope ID: 81482C85-680A-43FE-9FD2-AE44101CA068

Schedule 1

Liquidated Damages and Payments (clauses 5.9 and 9)

1	The **Price** payable by Developer for each Lot in a Stage (including supply of a Network Termination Device at each Lot to be used by Default Retail Service Provider)	Nil
2	Payment Schedule for Price payable by Developer (based on expected number of Lots for the Stage):	
	Within 30 days after Practical Completion of the Network for that Stage	Not applicable
3	Liquidated Damages (per day or part of a day)	$1,200
4	Liquidated Damages Cap (per Stage)	Not applicable
5	**Maximum Amounts chargeable to RSPs for non-Network maintenance**	
	(a) Foxtel and free to air overlay supply call for non-network failures including power failure, sabotage and 3rd party damage to pathway and equipment	$195 per hour (GST-incl.)
	(b) Turning on Calix Gigabit NTD if it has been turned off or disconnected by user	$195 callout fee (GST-incl.)
	(c) Non network failures for GPON Fiber Network including power failure, sabotage, and 3rd party damage to equipment	$299 (GST incl) first hour and $149 (GST incl) per hour thereafter
6	**Maximum Network Connection Charge**	
	(a) for the very first connection of the relevant Lot at the Site	Nil
	(b) for each subsequent connection or re-connection of the same Lot at the Site	Nil

DocuSign Envelope ID: 81482C85-680A-43FE-9FD2-AE44101CA068

Schedule 2

Minimum Network Capabilities (clause 4.1)

---

1 The **Pit and Pipe Network** for the Stage should be designed in accordance with Australian telecommunications industry best practice.

2 The **Network** for the Stage must:

(a) use optical fibre capable of delivering the Wholesale Services and the Retail Services to the Lots in that Stage (and with sufficient spare capacity for Lots in future Stages, where applicable) and the equipment specified in Annexure A to provide the Wi-Fi Services;

(b) be connected to Carrier's backhaul between the Site and Carrier's nearest Point of Presence with sufficient capacity to deliver the Wholesale Services and the Retail Services to every Lot in every existing and proposed Stage at the Site;

(c) interconnect with the Network installed for previous Stages at the Site (where applicable) including where that Network was designed and installed by a third party, and must be capable of interconnecting with Network to be installed in later proposed Stages at the Site (where applicable) including where that Network may be designed and installed by a third party; and

(d) to the extent relevant, comply with the minimum Standards and Specifications specified in the table below.

3 The **Headworks** available at the Site must, to the extent relevant, comply with the minimum Standards and Specifications specified in the table below.

4 The **Wholesale Services** available at each Lot must include at least the following:

(a) a fixed telephony resale service that meets all the requirements of a basic telephone service under Telecommunications Legislation; and

(b) a fixed broadband internet resale service that is capable of a minimum 100Mbps actual download and 10Mbps actual upload speed in peak periods/at all times;

(c) a connection between the satellite receiver and each Lot allowing for the retransmission of Foxtel satellite signals to any Lot that enters into a subscription arrangement directly with Foxtel; and

(d) a connection between the Freeview TV antenna and each Lot allowing for the retransmission of digital Freeview signals to any Lot.

5 The **Wi-Fi Services** available in the common areas of residential buildings and in public areas for a Stage must comply with the specifications set out on page 6 of the Quote in Annexure A.

Despite and in addition to anything in this Schedule, it is a minimum requirement of the Network and the Wholesale Services that they are at least equivalent to the minimum offerings on the NBN, including as those minimum offerings are improved over time.

DocuSign Envelope ID: 81482C85-680A-43FE-9FD2-AE44101CA068

Minimum Standards and Specifications

Name	Description	Organisation	Purpose
AS/NZS 1367	Coaxial cable and optical fibre systems for the RF distribution of analog and digital television and sound signals in single and multiple dwelling installations	Standards Australia	To provide specifications and requirements for the cabling of range of premises and buildings generally referred to in this Standard as dwellings, for distribution of analog and digital services such as free-to-air TV and sound, subscription or pay TV, or in-house video systems via RF distribution
AS/NZS 3000	Australian/New Zealand Wiring Rules	Standards Australia	To ensure the safety of personnel against the dangers arising from the use and handling of electrical equipment and appliances
AS/NZS 3080	Telecommunications Installations – Generic cabling for commercial premises	Standards Australia	Design principles and installation requirements for generic cabling within commercial premises, which may comprise single buildings or multiple buildings on a campus. It covers balanced cabling and optical fibre cabling.
AS/NZS 3084	Telecommunications installations – Telecommunications pathways and spaces for commercial buildings	Standards Australia	Specifies the structure and requirements for pathways and spaces within or between buildings for information exchange and telecommunications cabling.
AS/NZS 3085	Telecommunications installations – Administration of communications cabling systems	Standards Australia	Covers the essential basic requirements for identification of components of the cabling and pathway systems for the recording of installation particulars.
ITU-T G.652	Single Mode Fibre Characteristics	ITU-T (International Telecommunications Union – Telecommunications Standardisation Sector)	Characteristics of a single-mode optical fibre cable.
ITU-T G.984	GPON Access Definition	ITU-T	Recommendation G.984 is a family of recommendations that gigabit passive optical networks (GPON) for telecommunications networks

DocuSign Envelope ID: 81482C85-680A-43FE-9FD2-AE44101CA068

Schedule 3

Development Concept Plan, Stages and Dates for Practical Completion

Development Concept Plan

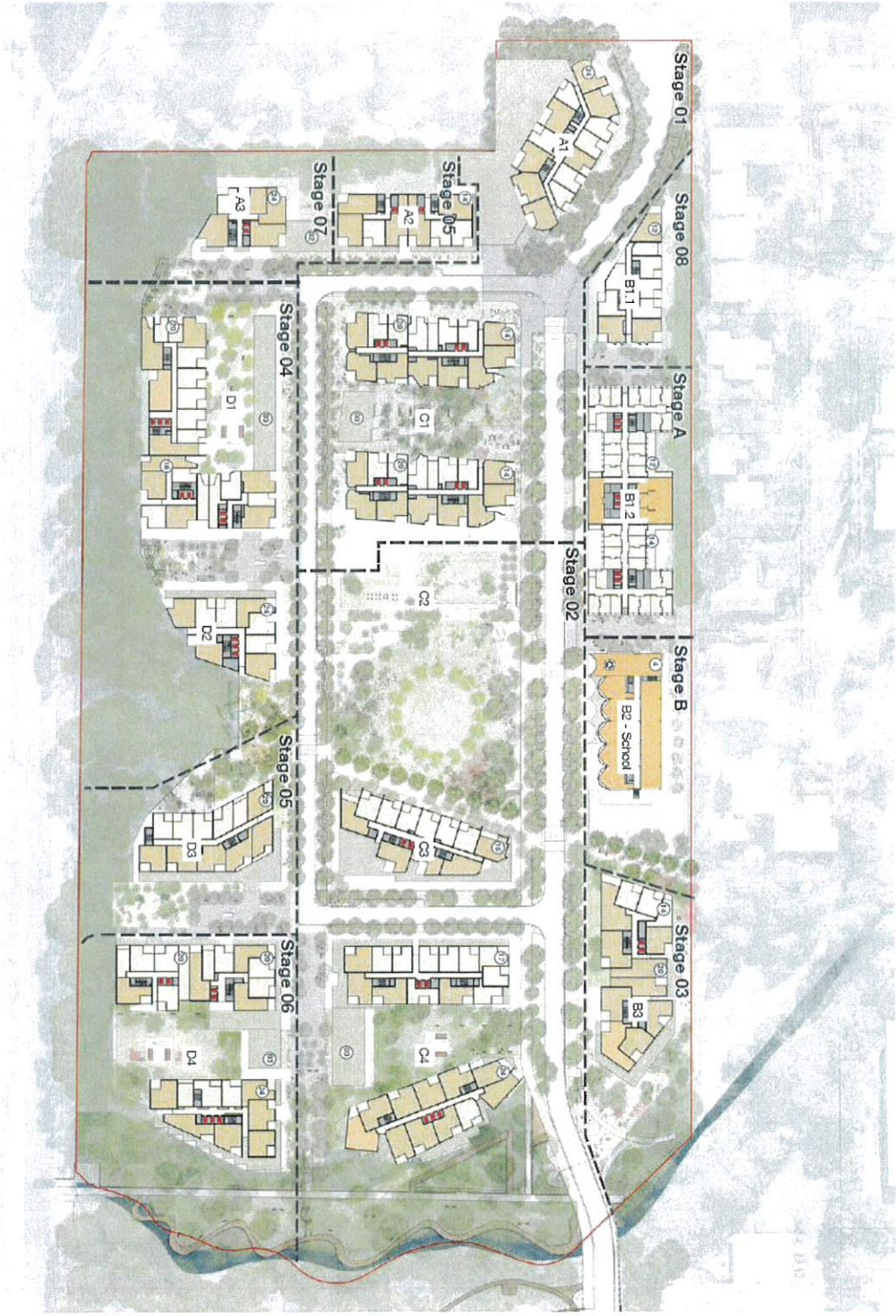

DocuSign Envelope ID: 81482C85-680A-43FE-9FD2-AE44101CA068

Stages and Dates for Practical Completion

Stage	Sections	Date for Practical Completion
Stage 1A	A1	31 August 2022
Stage 1B	C1.1, C1.2, C1.3, C1.4, C1.5	30 September 2023
Stage 2A	C3	31 March 2024
Stage 2B	C4.1, C4.2, C4.3	31 October 2024
Stage 3	B3	31 August 2025
Stage 4A	D1.1, D1.2, D1.3	30 June 2026
Stage 4B	D2	31 March 2027
Stage 5A	A2	30 June 2027
Stage 5B	D3	31 July 2028
Stage 6	D4.1, D4.2, D4.3, D4.4	31 October 2028
Stage 7	A3.1, A3.2	31 October 2029
Stage 8	B1.1	30 April 2030
Stage AA	B1.2, B1.3	30 November 2024
Stage AB	B1.4	30 April 2027
Stage B	School	31 October 2027

See the Development Concept Plan above depicting each stage described in the above table column headed "Stage".

DocuSign Envelope ID: 81482C85-680A-43FE-9FD2-AE44101CA068

Schedule 4

Network Diagram

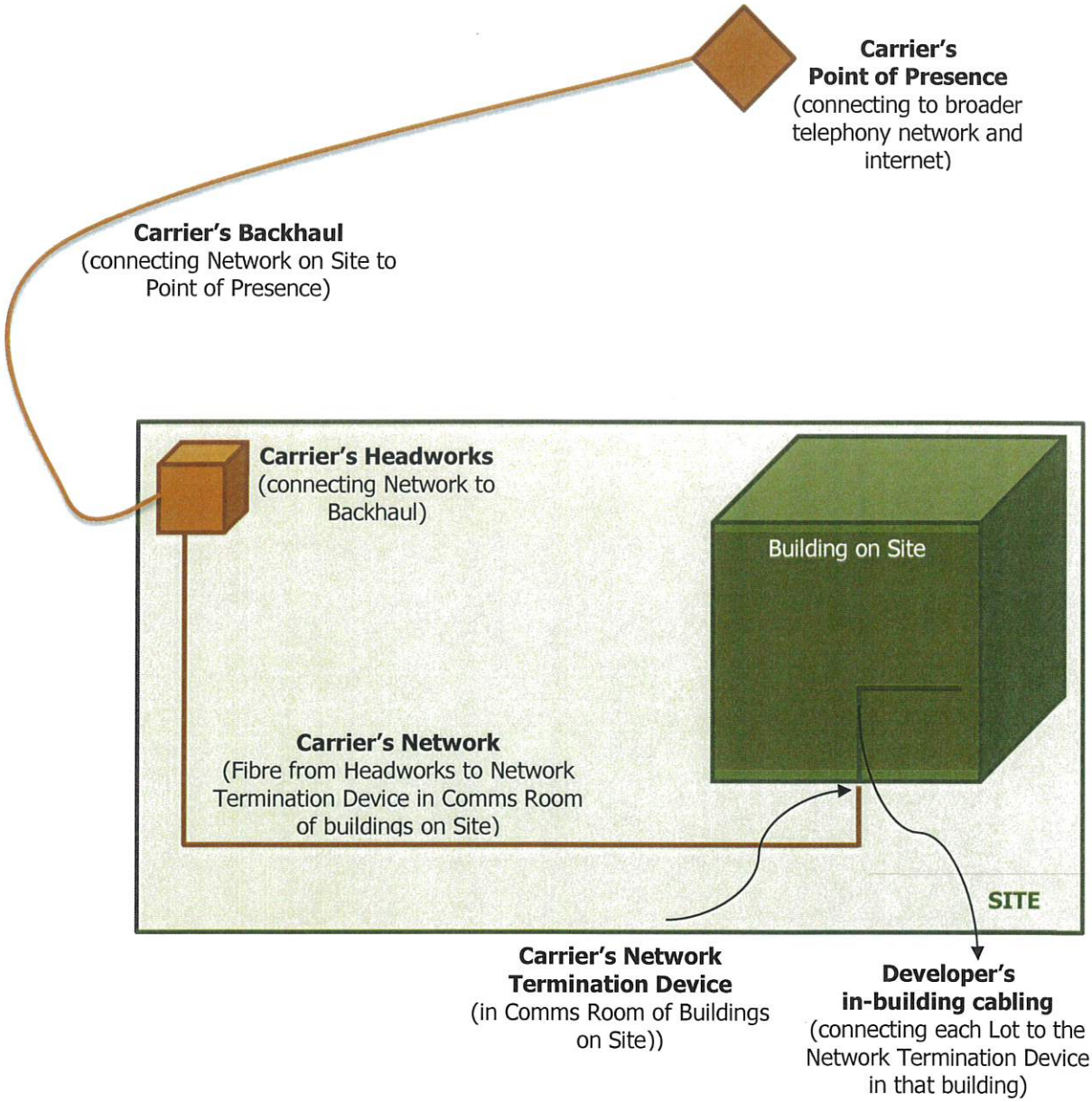

DocuSign Envelope ID: 81482C85-680A-43FE-9FD2-AE44101CA068

Annexure A

FiberCorp quote (clause 4.5)

See attached

FIBERPRO PTY LTD
Fiber Data ,VOIP, IP & Network Services Solution

22/07/2020

Attention: Frasers Property Group

QUOTE # 0180941-2

Site of Works: Ivanhoe Rd, Macquarie Park NSW

Dear Chris
Please see below our price per unit for Data, VOIP, IP & Network Service Solutions now including private and public Wi-Fi
Our price to supply, cable, install and commission a Fiber To The Premise GPON Network to the apartment is broken down below

PRODUCTS	FIBERCORP COST BUY PRICE	FIBERCORP COST BUY PRICE Cost Per Unit	QTY	Total (excluding GST)
GPON Fiber Network includes supply and install of cables and associated equipment to provide Fiber to the premise solution to each apartment in Ivanhoe Precinct Project includes street fiber to connect future stages.	$290.79	$0.00	3307	**$0.00**
Foxtel and Free to air overlay supply and install RF model over the fiber network. (this work will be removed from the electrical contractor and save the developer money)	$144.47	$0.00	3307	**$0.00**
Calix Gigabit NTD – 4 port Ethernet , 2x Pots Ports + power supply	$132.12	$0.00	3307	**$0.00**
Public and Private Wi-Fi – common areas and public wi-fi		$0.00	TBC	**$0.00**
TOTAL Cost Per Unit(excluding GST)			3307	**$0.00**

*This quotation is indicative and valid for 30 days from date of issue all prices are EX GST****

DocuSign Envelope ID: 81482C85-680A-43FE-9FD2-AE44101CA068

FIBER CORP.

Scope of Works
Fibre To The Premise

GPON, FOX & Free to Air

- Preliminary design of FTTP solution
- Supply, Install and Terminate 24 core Single Mode Fiber
- onto wall breakout box as per Telecommunications
- Specification requirements.
- Supply and install external fiber through street and pit and pipe allowances made by builder to connect precinct to main communications point.
- Provide racks housing equipment and patch panels in the Communications room.
- Install and commission head-end equipment for the delivery of wholesale Layer 2 Internet connection for multiple Internet Service Providers, telephone services.
- Provision of incoming optical fibre backbone services from street to a new communications rack/cabinet in the Communications room.
- Supply and install FOBOT (Fiber MDF) and Splitters
- Supply and Install FTA receiver
- Supply and Install WDM Tray
- Supply and Install EDFA splitter
- Supply and Install Fox and FTA stacker head end
- 42u Rack in the Communications room
- UPS in the Communications room for active equipment
- Provide shop and as-built drawings
- 12 months defects liability
- Provide Foxtel certification and approvals for site light up
- Design, supply and install Residential Common area Wi-Fi Access Points – Ubiquity
- Design , Supply and Install Site Common area Public Wi-fi – Ruckus access points
- Ruckus Control Unit
  Uniquity Control unit
- Wi-Fi security Software licences
- POE Injectors to suit Wi-fi Access points where required

Works by others

- Pathways for cabling
- Allowance for pits
- Pit and pipe work to be done by developer/builder to Fiber Corp Specification.
- Install from building to boundary 2x 100mm conduit as per NBN spec with pull rope to MDF from street front.
- Install conduit from basement communications room to ONU (in unit) location as per Fiber Corp / NBN specification with pull rope
- Supply and install Unit Distributor / Patch Panel
- Electrical power requirements x 2 Double GPO and 1 USB charging point per unit
- Unit reticulation cabling (including for any IP intercom services)
- Cable testing
- Foxtel approved splitters and taps
- Supply and Install Foxtel Satellite and FTA antenna
- Smart Poles and power requirements
- Cabling requirements for Wi-fi Access Points
- Power requirements for Wi-fi access points

*This quotation is indicative and valid for 30 days from date of issue****

DocuSign Envelope ID: 81482C85-680A-43FE-9FD2-AE44101CA068

Fibercorp a true alternative to NBNCo

Frasers Property Group – Ivanhoe Road Macquarie Park - What is included

- Install Fibre Optic Super-fast speed Broadband network lead in registered with AusGov.
- Integration onto the Calix GPON network active equipment utilising Australian Standards approved passive equipment as specified. Installation of Calix e7 head end equipment and associated equipment for Foxtel and Free to Air service overlay
- Supply of corporate internet service for building manger – free
- Free Wi-Fi in common area Residential and Public Wi-Fi solutions see page 6
- No backhaul charge
- Free pathway design
- 60-day's free internet for the end users
- Community Hall – Free internet
- School, Mission Australia and Retail (x6) Free Internet for 12 months

Note:

- Fibercorp is the only Superfast speed carrier in Australia that utilises Calix active equipment and does not use banned equipment.
- Conduits both lead in and in unit and pathways to be provided with pathway licence to Fibercorp as per NBNCo

*This quotation is indicative and valid for 30 days from date of issue****

DocuSign Envelope ID: 81482C85-680A-43FE-9FD2-AE44101CA068

Fibercorp GPON Schematic

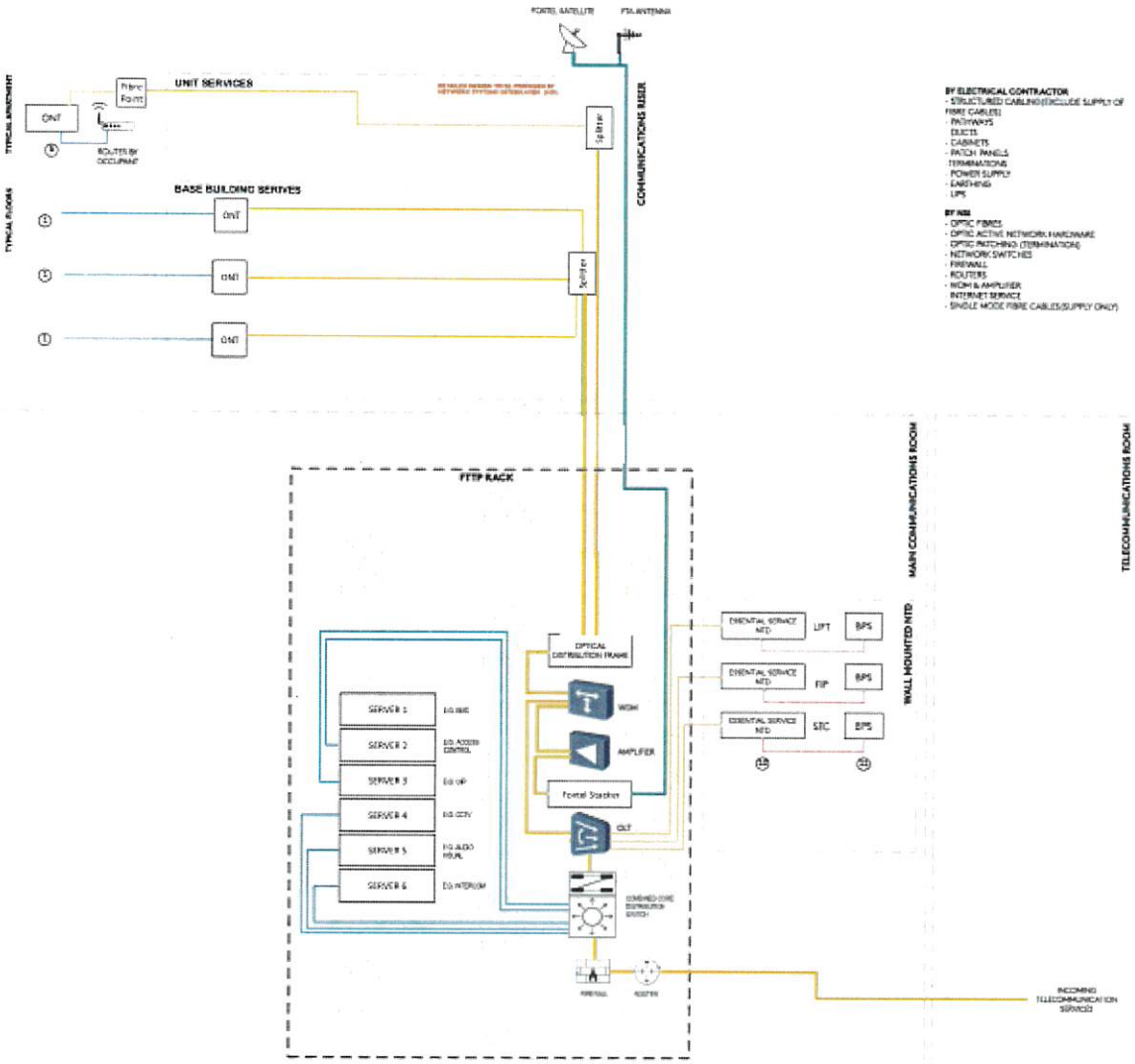

*This quotation is indicative and valid for 30 days from date of issue****

DocuSign Envelope ID: 81482C85-680A-43FE-9FD2-AE44101CA068

FIBER CORP.

Scope of Works
Public and Private Wi-Fi

Base Building Solution

10 x ZoneDirector 1200 - Licensed for up to 50 Ubiquity Access - Points, ZD1200 can be upgraded to support up to 75 P's with AP license upgrades if using software release pre ZD10.0. If using software ZD10.0 and above, ZD1200 can be upgraded to support up to 150 AP's with license upgrades

TBC x Ubiquity R510 dual-band 8 02.11abgn/ac WirelWatchDog - AccWatchDog Point, 2x2:2 streams, BeamFlex+, dual ports, 802.3af PoE support - Does not include power adapter or PoE injector. Includes Limited Lifetime Warranty

TBC x Secure Mounting Bracket for Ruckus R720, R710. Mounts - to hard wall/ceiling, pole, and truss. Also fits R500, R510, R610, R600, R310, M510 and R700 without pad-lock support

10 x Partner WatchDog Support for ZoneDirector 1205, 3 Year

2 x ZoneDirector 1200 Single AP License Upgrade SKU. Max - orderable upgrade license quantity is 70 if using software pre ZD10.0 . If using release ZD10.0 and above, max orderable upgrade license quantity is 145

2 x Partner WatchDog Support for ZoneDirector ONE AP Upgrade, 3 Years

Public Access Solution

10 x ZoneDirector 1200, licensed for up to 50 Ruckus Access Points. ZD1200 can be upgraded to support up to 75 APs with AP license upgrades if using software release pre ZD10.0 . If using software ZD10.0 and above, ZD1200 can be upgraded to support up to 150 APs with license upgrades

TBC x Ruckus T300, omni, outdoor Access point, 802.11ac 2x2:2 internal BeamFlex+, dual band concurrent, one ethernet port, PoE input, includes mounting bracket and one year warranty. Does not include PoE injector

TBC x Ruckus R510 dual-band 802.11abgn/ac WirelWatchDog AccWatchDog Point, 2x2:2 streams, BeamFlex+, dual ports, 802.3af PoE support. Does not include power adapter or PoE injector. Includes Limited Lifetime Warranty

TBC x Secure Mounting Bracket for Ruckus R720, R710. Mounts to hard wall/ceiling, pole, and truss. Also fits R500, R510, R610, R600, R310, M510 and R700 without pad-lock support

- **10 x Partner WatchDog Support** for ZoneDirector 1205, 3 Year
- **4 x ZoneDirector 1200** Single AP License Upgrade SKU. Max orderable upgrade license quantity is 70 if using software pre ZD10.0 . If using release ZD10.0 and above, max orderable upgrade license quantity is 145
- **4 x Partner WatchDog Support** for ZoneDirector ONE AP Upgrade, 3 Years

Product	Cost Per Unit	QTY	Total excluding GST
Wi-Fi*	$0.00	TBC	$0

*price is based off above product quantities and is an estimate only. This is optional and we can quote pricing if Wi-Fi option is chosen.

*This quotation is indicative and valid for 30 days from date of issue****

DocuSign Envelope ID: 81482C85-680A-43FE-9FD2-AE44101CA068

FIBER CORP.

Additional Services

Maintenance Fees

Fiber Corp do not charge a per unit per month fee as per competitors
All ongoing costs to deliver IP services will be supplied by Fiber Corp the licensed telecommunications carrier. Network maintenance and monitoring network faults within the buildings GPON network and the Foxtel and digital FTA services will be covered by the pricing schedule below outside of warranty period with explanations to charges

SCHEDULE Fees

1. **Fees payable for the Services:**

Fees or Service & Pricing catalogue;

Product	COST	Description
GPON Fiber Network maintenance call for non-network failures includes power failure, sabotage and 3rd party damage to pathway and equipment.	$299 first hour and $149 for each hour thereafter	General network maintenance is Nil cost and carrier obligation. This includes software updates, health checks for heat and dust and general configuration adjustments. Non network failure - Where a 3rd party has damaged, sabotaged or affected the network this fee will apply Eg a 3rd party cuts a fiber lead or damages the comms rack which affects carriage service.
Foxtel and Free to air overlay supply call for non-network failures includes power failure, sabotage and 3rd party damage to pathway and equipment.	$195 per hour minimum	Fox and FTA These charges pertain to RF module being disconnected by unit occupant, dish damage due to weather incident, tv fault , 3rd party affects equipment such as non-advised planned power outages . - Maintenance and troubleshooting remotely are at nil cost - Channel updates etc do not have call out fees as this is done remotely
Calix Gigabit NTD – disconnection and power turn off non network fault	$195 call out fee.	NTD charge is to deter people from turning off the NTD which will cause network outage in that dwelling and if we have to send an installer to turn on the NTD this charge will be billed. - NTD will have stickers which clearly state do not power off.

DocuSign Envelope ID: 81482C85-680A-43FE-9FD2-AE44101CA068

DocuSign Envelope ID: 81482C85-680A-43FE-9FD2-AE44101CA068

Annexure B

Access Licence (clause 6.2)

See attached

Eric Hausfeld

From: Chris Koukoutaris <Chris.Koukoutaris@frasersproperty.com.au>
Sent: Wednesday, 18 August 2021 4:15 PM
To: Eric Hausfeld
Cc: Peter Statham; Stephen Peters
Subject: FW: AN-22381 NORTH RYDE - Certified Design - 2 EPPING ROAD, NORTH RYDE
Attachments: AN-22381 - 20210428 - Design Amd 0 - CERTIFIED.pdf; AN-22381 - 20210430 - SER - VERIFIED.pdf

Hi Eric,

Please find attached the stage 2 electrical conduit design approval.

Please also refer emails below

Thanks

Chris Koukoutaris
Senior Development Manager
Frasers Property Australia

T +61 2 9767 2223 **M** +61 434 034 371
E Chris.Koukoutaris@frasersproperty.com.au
Level 2, 1C Homebush Bay Drive, Rhodes NSW 2138 Australia
www.frasersproperty.com.au | LinkedIn | YouTube

From: David Taylor <dtaylor@shelmerdines.com.au>
Sent: Friday, 30 April 2021 10:43 AM
To: Chris Koukoutaris <Chris.Koukoutaris@frasersproperty.com.au>
Cc: Scott Clohessy <Scott.Clohessy@frasersproperty.com.au>; Andrei Matiouk <amatiouk@shelmerdines.com.au>; Elbert Wang <Elbert@shelmerdines.com.au>
Subject: FW: AN-22381 NORTH RYDE - Certified Design - 2 EPPING ROAD, NORTH RYDE

EXTERNAL EMAIL: Do not click links or open attachments unless you recognise the sender and know the content is safe.

Hi Chris,

Attached is the certified design for the Stage 2 conduits.

Regards

David Taylor

Shelmerdines Consulting Engineers
Tel: (02) 9436 3021
Mob: 0419 615 351
Email: dtaylor@shelmerdines.com.au

Web: www.shelmerdines.com.au

Before printing this email, please assess if it is really necessary

From: Ausgrid Customer Team <CRM-no-reply@Ausgrid.com.au>
Sent: Friday, 30 April 2021 10:20 AM
To: David Taylor <dtaylor@shelmerdines.com.au>
Cc: Jan Bartosiak <jbartosiak@ausgrid.com.au>
Subject: AN-22381 NORTH RYDE - Certified Design - 2 EPPING ROAD, NORTH RYDE

Dear David,

Ausgrid has certified the electrical design plan(s) for the above project. The certification number for this design is 5596369/20210428. In providing this certification, Ausgrid makes no warranty, express or implied that the design is fit for the intended purpose or is suitable for the site conditions. The certification is provided exclusively on the basis of the design submitted without reference to any underlying assumptions or conditions.

Your client will be notified of the drawing certification and the conditions that must be met for the project to proceed to the next stage.

The certified design plan(s) along with the approved SER worksheet are attached.

Should you require any further information please contact me on the phone number or email address detailed below.

Best Regards,

Jan Bartosiak | Customer Connections | Ausgrid

Email: jbartosiak@ausgrid.com.au | Phone: 0285696728

This e-mail may contain confidential or privileged information. If you have received it in error, please notify the sender immediately via return e-mail and then delete the original e-mail. If you are the intended recipient, please note the change of sender email address to @ausgrid.com.au. Ausgrid has collected your business contact details for dealing with you in your business capacity. More information about how we handle your personal information, including your right of access is contained at http://www.ausgrid.com.au/

Message protected by MailGuard: e-mail anti-virus, anti-spam and content filtering.
http://www.mailguard.com.au

Report this message as spam

Message protected by MailGuard: e-mail anti-virus, anti-spam and content filtering.
http://www.mailguard.com.au

Notes

1. This report is to be used in accordance with NSW Code of Practice for Authorised Network Operators, Department of Planning and Environment, September 2015 (Planning Code). In particular, any proposed works assessed under this report (Activity) must be expected on a reasonable basis to have impacts which are minor and neither extensive nor complex and require a Part 5 assessment under the Environmental Planning and Assessment Act 1979 (NSW). The report may also be used to determine whether a more detailed environmental impact assessment is needed. This report should be used where the "Stage 1 - preliminary assessment" conducted in accordance with NS 174B Environmental Assessment Guidelines identifies that an SER is required.
2. Instructions for completing this report are contained in NS174 Environmental Procedures Supplementary Notes - EIA Guidelines and EGN 174B SER Guidance Notes which can be accessed by the information buttons. The report should also be prepared in accordance with the relevant information in NS 174B Environmental Assessment Guidelines which relates to the Planning Code requirements. An SER must comply with the Planning Code requirements.
3. If Ausgrid is performing the Nominated Determining Authority role, the report must identify all factors other agencies will need to consider to determine whether a separate licence or approval can be issued and record that Ausgrid consulted with those agencies to clarify any specific information that should be covered by the assessment documentation.
4. The report must be prepared by persons appropriately trained to consider and assess the impacts of the Activity in accordance with the requirements of NS 174B Environmental Assessment Guidelines. The SER must not be verified by the same person who conducted the assessment (ie. prepared the report).
5. Proposals involving level 3 risks (Table 2) will require verification by Ausgrid's Environmental Services.
6. Fields marked with an asterisk (*) must be completed before the form can be submitted.
7. The SER once verified forms Ausgrid's conditional determination of the proposal. Conditions include specific controls in this SER and controls in NS174C Environmental Handbook for Construction and Maintenance. In the event of an inconsistency, specific controls in this SER will prevail.

Project information

Project name * (include asset # where known)	Installation of conduits for the Ivanhoe development stage 2
Project number * (do not use symbols such as &)	AN22381
Street number	
Street	Ivanhoe Place
Suburb *	Macquarie Park
Ausgrid project coordinator (if known)	Jan Bartosiak
Version date	30/04/2021
SER status	Approved

Table 1 - Project details

1.1 Scope of activities covered by this SER

Description: *

Works: The developer proposes to install spare conduits prior to Ivanhoe Estate stage 2 civil works. This will facilitate HV reticulation to be installed in future stages.

Design reference: AN22381 20/04/2021.
NOTE: CHANGES TO THE DESCRIPTION OF THE PROPOSED ACTIVITY (INCLUDING THE DESIGN) WILL REQUIRE A REASSESSMENT.

Typical construction methodologies would be utilised and include the use of a wet vac, excavator, tip truck, skip bin.

Access: All work, including access during construction, would occur within existing roadways or pre-approved Ausgrid access tracks. Work would occur within a roadway and, as such, provisions for traffic management would be made sufficient to meet local Council and the Roads and Maritime Service (RMS) standards.

Vegetation trimming/clearing: Vegetation removal is not required to complete this work. Vegetation management is not required because the site is to be redeveloped. Vegetation removal to be completed by the builder.

1.2 Future maintenance activities and ongoing operational requirements

Description: *

The Activity includes future maintenance, operation, inspection, repair and decommissioning. This may include works undertaken out of normal working hours and vegetation management works. All works would be undertaken in accordance with NS174C Environmental Handbook for Construction and Maintenance and Ausgrid's Tree Safety Management Plan or equivalent procedures in force at the time.

1.3 Related projects

Description:

SC12221, SC12764, SC12963, AN20123 are related projects for residential subdivision at the Ivanhoe Estate.

1.4 Need for the proposed Activity

Description: *

The proposed conduits will be installed prior to Ivanhoe Estate Stage 2 civil works to minimise excavation works in future stages and to facilitate the installation of future HV reticulation.

1.5 Route/site option justification: (This should be completed in conjuction with Table 2)

Description: *

Route has been selected based on proposed substation locations within the development site.

1.6 Indicative commencement date and duration of works

Description: *

Work is expected to commence in 01/07/2021 and take approximately 1 month to complete. This timeframe is indicative and may vary due to the contractor or specialist availability, resources and consultation with the community.

The construction period may also vary in duration depending on weather conditions, technical parameters, environmental issues, resources and availability of contractors and specialists.

Working hours are restricted to Monday to Friday 7 am to 6 pm and Saturdays 8 am to 1 pm, with no work on Sundays and public holidays. Working outside these hours, although not expected, may be required where RMS Road Occupancy Licences stipulate out of hours work or there would be a greater environmental or social benefit as a result of out of hours work occurring. Refer to Table 2 regarding any specific construction controls.

1.7 Description of the land - environmental characteristics, land use and land ownership

Description: *

The study area for this project has been defined by coordinates indicated in the attached WebGIS EL Report. This project is to be carried out on Lot 100 DP1262209. The study area encompasses all those matters potentially affected as a result of the proposal. Matters likely to be affected are addressed in this assessment.

The area is dominated by residential land uses. Distinguishing features relating to this activity include main roads bounding the site and vegetation including endangered flora.

The area has been mapped on Ausgrid's WebGIS EL Report to include the following within the study area:
- Climate Change Adaption - Flood Planning Area
- Ecology - Commonwealth EEC
- Ecology - Commonwealth Threatened Flora
- Ecology - NSW Endangered Ecological Community
- Ecology - NSW Threatened Fauna
- Ecology - Other
- Hazards - PCBs
- Planning - SEPP State Significant Development Sites
- Water - Waterbody or Wetland buffer

Land ownership: work would occur within private land for the installation of spare conduits. Ausgrid's Property section has undertaken a title search which shows that the land is owned by LAHC. The creation of easements is not expected to be lodged as the conduits are to be installed in the proposed public domain at the property boundaries.

1.8 Notification or approval requirements for Drinking Water Catchment Areas, Crown Land, Crown-Timber Land, State Forests, Mine subsidence areas, SHFA areas, SOPA areas and Water Catchment Areas

Description:

The proposal is not within a drinking water catchment area, stateforests, Crown land, mine subsidence areas, Property NSW areas (formerly SHFA areas) or SOPA areas.

1.9 Council notification (Electricity Supply Act)

Description:

Notification date: 20/01/2021

Summary of responses: Council made a submission on 28/01/2021 in response to the mandatory notification provided in accordance with Section 45 of the Electricity Supply Act NSW. Those comments have been considered as part of this assessment and have informed Ausgrid's planning decision.

The mandatory notification and response is attached to this assessment.

1.10 Council/authority notification (SEPP Infrastructure and other)

Description:

Authority: N/A

Notification date: N/A

Summary of responses: N/A

1.11 Community consultation (SEPP Infrastructure & other)

Description:

Notification date: N/A

Summary of submission: N/A

Proposed consultation: All potentially affected residents / businesses must be notified between 4 and 14 clear business days prior to the commencement of work. Where residents / businesses are directly affected by the work, for example their access would be restricted, at least four clear business days notice must be given. Notices issued would outline the reason for the work, a suitable point of contact, estimated duration and any potential construction impacts. This may include temporary changes to traffic, construction noise and the location of site compounds.

1.12 Statutory context

Description: *

The project falls within Clause 41 of the State Environmental Planning Policy (Infrastructure) 2007 (NSW) as 'development permitted without consent' and is not on land reserved under the National Parks and Wildlife Act 1974 (NSW) or to which clauses 10 and 11 of State Environmental Planning Policy (Coastal Management) 2018 apply.

This SER forms an assessment for the purposes of section 5.5 of Part 5 of the Environmental Planning and Assessment Act 1979 (NSW) (in accordance with clause 228 of the Environmental Planning and Assessment Regulation 2000 (NSW))and the NSW Code of Practice for Authorised Network Operators.

Table 2 – Environmental impact assessment & specific construction controls

Ecology

2.1 Matters of national environmental significance (NES, Commonwealth)

- ○ Level 1 - No potential impacts identified
- ● Level 2 - Impacts would be avoided / minimised. Specific controls may be required.
- ○ Level 3 - Referral to Environmental Services for further assessment

Description of potential impacts	Specific construction controls
The following matters of NES are within the Assessment Area: - Turpentine-Ironbark Forest of the Sydney Basin Bioregion - Threatened Flora Genoplesium baueri - Protected Riparian Land The proposal would NOT impact any matters of NES other than vegetation maintenance, undertaken in accordance with Ausgrid¿s TSMP where clearing is to the minimum extent necessary to maintain existing and regularly maintained clearances (ie no new clearance envelopes). Avoidance of impacts would be appropriately managed with the specific construction controls.	1. All workers to be made aware of ecologically sensitive areas and the need to avoid impacts. 2. No works in undisturbed areas (including storing equipment in, parking vehicles on or accessing the worksite through an undisturbed area). 3. No disturbance of bush rock, tree hollows, wetlands, mangroves, nests, aquatic or other sensitive habitats. 4. Retain native ground cover vegetation. 5. No disturbance of native vegetation unless works are for the purpose of vegetation maintenance, undertaken in accordance with Ausgrid¿s TSMP and clearing is to the minimum extent necessary to maintain existing and regularly maintained clearances (ie no new clearance envelopes). 6. Comply with the controls in NS174C-Section 6.1. Note: 'Disturbance' includes trimming, pruning or removing vegetation including root structure.

2.2 Biodiversity (NSW)

- ○ Level 1 - No potential impacts identified
- ◉ Level 2 - Impacts would be avoided / minimised. Specific controls may be required.
- ○ Level 3 - Referral to Environmental Services for further assessment

Description of potential impacts	Specific construction controls
The following threatened species or ecological communities (or their habitats), declared areas of outstanding biodiversity value or critical habitat are in the Assessment Area: - Turpentine-Ironbark Forest of the Sydney Basin Bioregion - Protected Riparian Land The proposal would NOT impact any threatened species or ecological communities (or their habitats), declared areas of outstanding biodiversity value or critical habitat other than vegetation maintenance, undertaken in accordance with Ausgrid¿s TSMP where clearing is to the minimum extent necessary to maintain existing and regularly maintained clearances (ie no new clearance envelopes). Avoidance of impacts would be appropriately managed with the specific construction controls.	See controls in 2.1

2.3 Marine vegetation (mangroves, seagrass etc) or dredging/reclamation of a water body

- ◉ Level 1 - No potential impacts identified
- ○ Level 2 - Impacts would be avoided / minimised. Specific controls may be required.
- ○ Level 3 - Referral to Environmental Services for further assessment

Description of potential impacts	Specific construction controls
The proposal is NOT within 100m of marine vegetation (seagrass or mangroves etc) or within 20m of a waterway (as identified by the WebGIS EL Report, consultation process, site inspection and other means).	NS174C Environmental Handbook applies

2.4 Other ecological issues

- (●) Level 1 - No potential impacts identified
- ( ) Level 2 - Impacts would be avoided / minimised. Specific controls may be required.
- ( ) Level 3 - Referral to Environmental Services for further assessment

Description of potential impacts	Specific construction controls
The proposal is NOT within marine parks, aquatic / nature reserves, wild rivers, national park estate, declared wilderness areas, coastal wetlands, littoral rainforests, biodiversity stewardship sites, wildlife refuge areas / management areas, conservation agreement areas, key fauna habitat, key fish habitat, or koala habitat (> 1 hectare of bush land) (as identified by WebGIS EL report, consultation process, site inspection and other means), AND The proposal would not affect native vegetation, hollow bearing trees, remnant roadside vegetation, significant trees (as defined by local council) or street trees. Works include trenching within the Ivanhoe Estate along proposed property boundaries. It is expected that the routes will be cleared by the builder in preparation for the installation of these conduits.	NS174C Environmental Handbook applies

Heritage

2.5 Non-Aboriginal heritage

- (●) Level 1 - No potential impacts identified
- ( ) Level 2 - Impacts would be avoided / minimised. Specific controls may be required.
- ( ) Level 3 - Referral to Environmental Services for further assessment

Description of potential impacts	Specific construction controls
There are NO non-Aboriginal heritage items in the Assessment Area (as identified by WebGIS EL Report, consultation process, site inspection and other means) AND The proposal would NOT impact potential heritage items such as sandstone gutters, cobblestone roads or sandstone walls.	NS174C Environmental Handbook applies

2.6 Aboriginal cultural heritage

- (●) Level 1 - No potential impacts identified
- ( ) Level 2 - Impacts would be avoided / minimised. Specific controls may be required.
- ( ) Level 3 - Referral to Environmental Services for further assessment

Description of potential impacts	Specific construction controls
There is NO known Aboriginal cultural heritage in the Assessment Area (as identified by WebGIS EL report, developer/client assessments, consultation process, site inspection and other means); AND The proposal does NOT involve disturbing rockoutcrops; AND The proposal is NOT in undisturbed land with the following landscape features: -within 200m of waters, or -within a sand dune system, or -on a ridge top, ridge line or headland, or -within 200m below or above a cliff face, or -within 20m of or in a cave, rock shelter, or cave mouth	NS174C Environmental Handbook applies

Pollution

2.7 Air quality (dust, and other emissions)

- ( ) Level 1 - No potential impacts identified
- (●) Level 2 - Impacts would be avoided / minimised. Specific controls may be required.
- ( ) Level 3 - Referral to Environmental Services for further assessment

Description of potential impacts	Specific construction controls
The proposal involves activities that could generate dust and other emissions, however, avoidance of impacts would be appropriately managed with specific construction controls. The proposal would NOT involve dust leaving the worksite or generate offensive odours/fumes. The proposal would NOT involve any of the following: - transmission tower paint or corrosion removal or - installing a permanent exhaust.	1. Manage the worksite to prevent dust and fumes leaving the worksite. 2. Comply with the controls in NS174C-Section 4.1.

2.8 Oils, fuels and other chemicals

- (●) Level 1 - No potential impacts identified
- ( ) Level 2 - Impacts would be avoided / minimised. Specific controls may be required.
- ( ) Level 3 - Referral to Environmental Services for further assessment

Description of potential impacts	Specific construction controls
The proposal would NOT involve handling, storing, transporting or disposing of oils, fuels, chemicals or dangerous goods including oil filled equipment.	NS174C Environmental Handbook applies

2.9 Water quality (erosion and sedimentation)

- ○ Level 1 - No potential impacts identified
- ◉ Level 2 - Impacts would be avoided / minimised. Specific controls may be required.
- ○ Level 3 - Referral to Environmental Services for further assessment

Description of potential impacts	Specific construction controls
The proposal involves activities that could generate sediment or cause erosion, however, avoidance of impacts would be appropriately managed with specific construction controls. -existing storm water drain The proposal would NOT involve any of the following: - ground disturbance > 250m2 at any one time. - ground disturbance > 50m2 or vegetation removal on category 2 regulated land (vulnerable land- steep, highly erodible or protected riparian land). - ground disturbance > 50m2 within 40m of a natural waterway, including creeks, rivers, lakes, wetlands, streams, and ponds. - clearing within 20m of a waterway. - working within a natural waterway, including dredging (excavating), reclamation (filling) or vehicle access.	1. All workers to be made aware of sensitive areas (drainage lines, grates, drains, inlets, exposed surfaces, areas subject to bogging and waterways) and the need to avoid impacts. 2. Manage worksite to prevent sediment and unclean water leaving the site. 3. Comply with the controls in NS174C-Section 2.1. 4. No ground disturbance > 250m2 at any one time. 5. No ground disturbance > 50m2 or vegetation removal on category 2 regulated land (vulnerable land - steep, highly erodible or protected riparian land). 6. No ground disturbance > 50m2 within 40m of a natural waterway, including creeks, rivers, lakes, wetland, streams, and ponds. 7. No working within a natural waterway, including dredging (excavating), reclamation (filling) or vehicle access. 8. No clearing within 20m of a waterway.

2.10 Water quality (water discharge)

- ○ Level 1 - No potential impacts identified
- ◉ Level 2 - Impacts would be avoided / minimised. Specific controls may be required.
- ○ Level 3 - Referral to Environmental Services for further assessment

Description of potential impacts	Specific construction controls
The proposal may involve discharges of accumulated water, however, all discharges would be in accordance with NS174C-Section 2.2. The proposal would NOT involve any of the following: - groundwater extraction, - automatic or long term water discharges, - discharges > 100,000L.	1. All workers to be made aware of sensitive areas and the need to avoid impacts. 2. All discharges of accumulated water to comply with NS174C-Section 2.2. 3. No automatic or long-term water discharges. 4. No groundwater extraction.

Noise

2.11 Construction noise and vibration

- ○ Level 1 - No potential impacts identified
- ◉ Level 2 - Impacts would be avoided / minimised. Specific controls may be required.
- ○ Level 3 - Referral to Environmental Services for further assessment

Description of potential impacts	Specific construction controls
The proposal involves audible works in a sensitive area or high impact works, however, avoidance of impacts would be appropriately managed with specific construction controls. The proposal would not impact a receiver for >3 consecutive weeks without a specialist assessment or noise and vibration management plan.	1. Implement noise control measures and notification/respite requirements in accordance with NS174C-Section 4.2.

2.12 Operational noise and vibration

- ◉ Level 1 - No potential impacts identified
- ○ Level 2 - Impacts would be avoided / minimised. Specific controls may be required.
- ○ Level 3 - Referral to Environmental Services for further assessment

Description of potential impacts	Specific construction controls
The proposal would NOT involve the installation of transformers, CLCs, fans or other noise generating equipment.	NS174C Environmental Handbook applies

Contamination and waste

2.13 Contamination and hazardous materials

- ○ Level 1 - No potential impacts identified
- ◉ Level 2 - Impacts would be avoided / minimised. Specific controls may be required.
- ○ Level 3 - Referral to Environmental Services for further assessment

Description of potential impacts	Specific construction controls
Contaminated land or hazardous materials are in the Assessment Area, however, avoidance of impacts would be appropriately managed with specific construction controls, AND There would be NO: - ground disturbance works within an area of known or indicators of contaminated land (as identified by WebGIS EL report, consultation process, site inspection and other means). - decommissioning any substations with indicators of contaminated land or decommissioning substations (excluding PTs) on private land. -WebGIS EL notes some equipment in the area has not been tested for PCBs. AN21290 decommissions all Ausgrid assets within the development site. Works do not occur near S.1853, S7967 or S.7968.	CAUTION: HAZARDOUS MATERIALS 1. All workers to be made aware of the presence of known and suspected hazardous materials. 2. All works with the potential to disturb asbestos containing materials must be undertaken in accordance with WHS requirements, SafeWorkNSW Code of Practice ¿ How to Safely Remove Asbestos, the specific work instructions detailed in NS211 Working with asbestos products and Ausgrid¿s Asbestos training. 3. No works to be undertaken in subs S.1853, S7967 or S.7968.

2.14 Acid sulfate soils

- (●) Level 1 - No potential impacts identified
- ( ) Level 2 - Impacts would be avoided / minimised. Specific controls may be required.
- ( ) Level 3 - Referral to Environmental Services for further assessment

Description of potential impacts	Specific construction controls
The proposal would NOT involve disturbing Acid Sulfate Soils (as identified by WebGIS EL report, consultation process, site inspection and other means).	NS174C Environmental Handbook applies

2.15 Waste

- ( ) Level 1 - No potential impacts identified
- (●) Level 2 - Impacts would be avoided / minimised. Specific controls may be required.
- ( ) Level 3 - Referral to Environmental Services for further assessment

Description of potential impacts	Specific construction controls
The proposal would generate hazardous, restricted solid, liquid, special (eg asbestos), PCB waste, or OCPs, however, avoidance of impacts would be appropriately managed with specific construction controls.	1. Manage all wastes in accordance with NS174C-Section 5.3. 2. Manage PCBs in accordance with NS174C-Section 3.2. 3. Manage spoil from 132 kV cable trenches in accordance with NS156 Working near or around underground cables.

Other

2.16 Traffic and access

- ( ) Level 1 - No potential impacts identified
- (●) Level 2 - Impacts would be avoided / minimised. Specific controls may be required.
- ( ) Level 3 - Referral to Environmental Services for further assessment

Description of potential impacts	Specific construction controls
The proposal will involve traffic and access impacts, however, impacts would be appropriately managed with specific construction controls. The proposal would NOT involve any of the following: - works on a public road which are non-compliant with the relevant RMS approval and road occupancy licence (ROL) requirements. - works non-compliant with notification requirements for affected residences and businesses. - permanent access restrictions for people with disabilities.	1. Where required, approvals and ROLs must be in place prior to works commencing. Comply with associated conditions.

2.17 Climate change adaptation

- ○ Level 1 - No potential impacts identified
- ◉ Level 2 - Impacts would be avoided / minimised. Specific controls may be required.
- ○ Level 3 - Referral to Environmental Services for further assessment

Description of potential impacts	Specific construction controls
The proposal would involve works within one of the following areas: - flood planning areas, - coastal vulnerability areas, - below projected sea level rise (1m above mean high-water mark). There would be no siting of kiosks in the above areas without Ausgrid's approval. There would be no siting of other infrastructure in the above areas where reasonably practicable.	NS174C Environmental Handbook applies

2.18 Bushfire

- ◉ Level 1 - No potential impacts identified
- ○ Level 2 - Impacts would be avoided / minimised. Specific controls may be required.
- ○ Level 3 - Referral to Environmental Services for further assessment

Description of potential impacts	Specific construction controls
The proposal is NOT within bushfire prone land (as identified by WebGIS EL report, consultation process and other means).	NS174C Environmental Handbook applies

2.19 EMF

- ◉ Level 1 - No potential impacts identified
- ○ Level 2 - Impacts would be avoided / minimised. Specific controls may be required.
- ○ Level 3 - Referral to Environmental Services for further assessment

Description of potential impacts	Specific construction controls
The proposal would not result in changes to EMF levels from Ausgrid's network.	NS174C Environmental Handbook applies

Decision statement

Assessor

☒ Agree. I certify to the best of my knowledge and belief that:

- I have completed this SER in accordance with NS174 Environmental Procedures Supplementary Notes - SER Guidelines, EGN 174B SER Guidance Notes, NS174B Environmental Assessment Guidelines and the Planning Code.
- The information contained in this SER is neither false nor misleading and I have been appropriately trained to consider and assess the impacts of the Activity in accordance with the requirements of NS 174B Environmental Assessment Guidelines.
- The Activity is a Class 3 activity under the Planning Code because it has impacts that are minor and neither extensive nor complex and can proceed subject to compliance with specific controls in this SER and minimum construction controls in NS174C Environmental Handbook for Construction and Maintenance.
- The scope of works for the Activity includes all construction, maintenance, operation and ancillary activities and accurately reflects the attached design plan for the Activity.
- I have completed a site inspection using EF 17410 SER Site Inspection.

Assessor name *	David Taylor	Assessor company *	Shelmerdines Consulting Engineers
Assessor contact No.*	02 9436 3021	ID number *	2606/02

Verifier

☒ Agree

- As an authorised person, I have approved this SER, on behalf of Ausgrid, in accordance with NS174 Environmental Procedures Supplementary Notes - SER Guidelines, EGN 174B SER Guidance Notes and EF 17450 - SER Verification Checklist.
- The Activity is a Class 3 activity under the Planning Code because it has impacts that are minor and neither extensive nor complex and can proceed subject to compliance with specific controls in this SER and minimum construction controls in NS174C Environmental Handbook for Construction and Maintenance.
- The scope of works for the Activity includes all construction, maintenance, operation and ancillary activities and accurately reflects the attached design plan for the Activity.

Verifier name *	Jan Bartosiak	Verifier contact No. *	02 8569 6728
Verification date time	30/04/2021 09:56:36 AM	ID number *	T47771

CHECK FOR OTHER SERVICES BEFORE BORING OR EXCAVATING

ALL WORK TO BE UNDERTAKEN IN ACCORDANCE WITH AUSGRID'S NETWORK STANDARDS

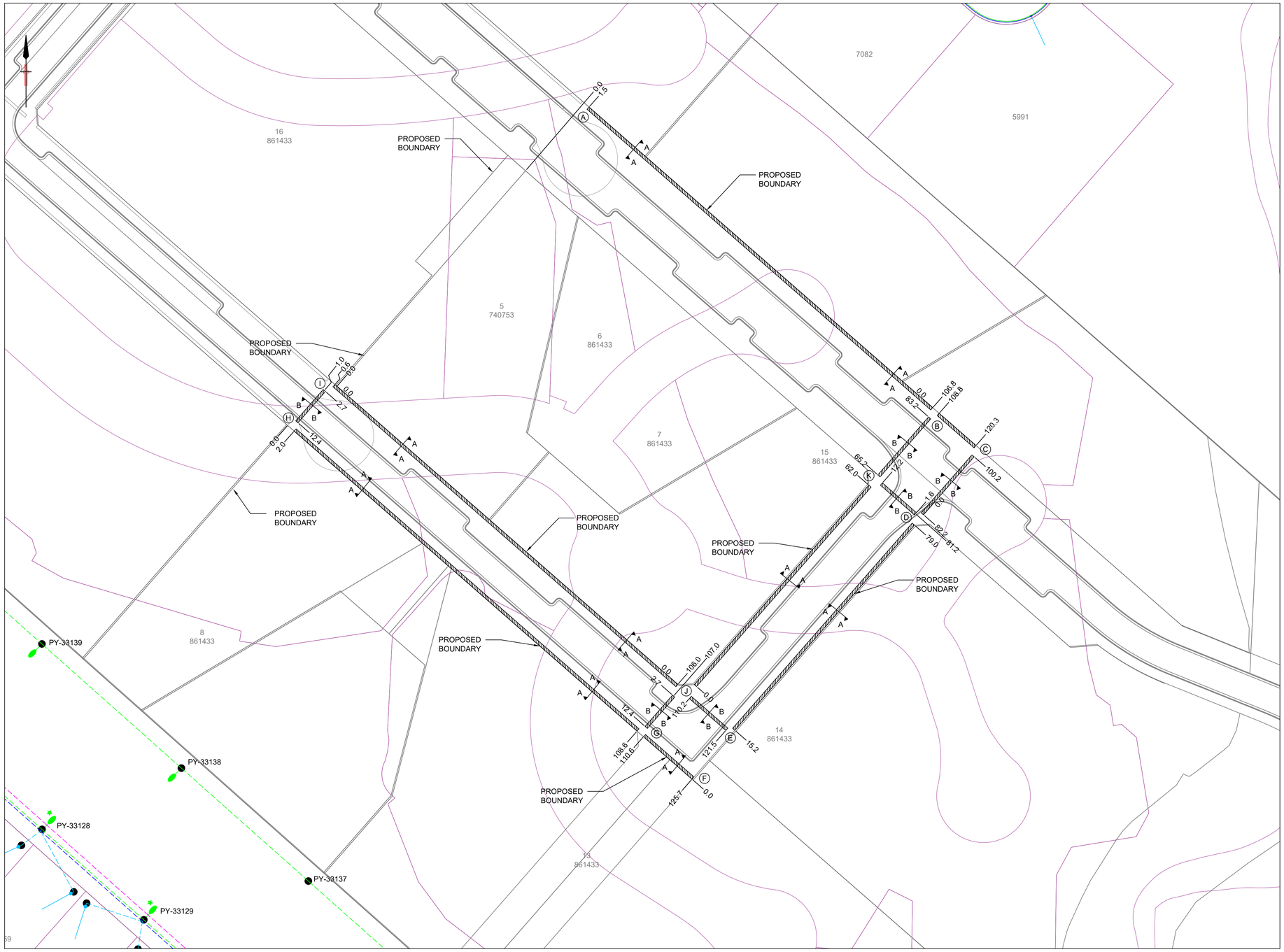

SITE PLAN

SCALE 1 : 500

0 10 20 30 40 50 METRES

GENERAL NOTES:

1. CLAIMS FOR VARIATIONS TO THE COST OF NON-CONTESTABLE WORKS, INCLUDING ROCK EXCAVATION, WILL NOT BE ACCEPTED UNLESS VERIFIED ON SITE BY AUSGRID WHILE THE WORKS ARE IN PROGRESS.
2. THE ASP1 IS RESPONSIBLE FOR UNDERTAKING SATISFACTORY CONSULTATION WITH ALL LOCAL CUSTOMERS, WHO MAY POTENTIALLY BE AFFECTED BY THE CONSTRUCTION WORKS INCLUDING ALL ALTERATIONS TO SERVICE MAINS.
3. THE ASP/1 MUST MINIMISE THE IMPACT OF THE WORKS ON THE ELECTRICITY SUPPLY TO CUSTOMERS AND INTERRUPTIONS TO SUPPLY MUST BE AVOIDED, WHERE POSSIBLE. UNLESS THE ASP/1 CAN PROVIDE AUSGRID WITH WRITTEN AGREEMENT FROM THE AFFECTED CUSTOMER(S), THEN AUSGRID MAY REQUIRE THE ASP/1 TO PROVIDE A GENERATOR(S) IN ORDER TO MAINTAIN SUPPLY TO CUSTOMERS BEING INTERRUPTED. WHERE INTERRUPTIONS ARE PERMITTED, AT LEAST FOUR (4) WORKING DAYS NOTICE MUST BE PROVIDED TO ALL AFFECTED CUSTOMERS PRIOR TO ANY PLANNED INTERRUPTION TO ELECTRICITY SUPPLY. NOTICE MUST BE IN WRITING IN ACCORDANCE WITH CLAUSE 12 OF AUSGRID'S STANDARD DEEMED CONNECTION CONTRACT.
4. SPECIFIC PRIOR APPROVAL MUST BE SOUGHT FROM AUSGRID FOR ANY PLANNED ELECTRICITY SUPPLY INTERRUPTIONS WHERE THE PLANNED INTERRUPTION WILL EXCEED ONE (1) HOUR IN DURATION OR THE DURATION WILL BE LESS THAN ONE HOUR, BUT A SUITABLE TIME FOR THE INTERRUPTION CANNOT BE MUTUALLY AGREED TO WITH THE AFFECTED CUSTOMER(S).
5. ENSURE ADEQUATE COVER OVER ALL CONDUITS BASED ON FINAL GROUND LEVELS. ALL CONDUITS WITHIN THE FOOTWAY TO HAVE A MINIMUM 600mm COVER. ALL CONDUITS WITHIN THE ROADWAY TO HAVE A MINIMUM 750mm COVER.
6. THE ASP/1 IS REQUIRED TO COMPLY WITH THE CORRECT PROCEDURE(S) FOR WORKING WITH AND/OR NEAR ASBESTOS MATERIAL. (REFER TO AUSGRID NUS 211 - WORKING WITH ASBESTOS PRODUCTS).
7. THE ASP/1 IS TO MAINTAIN ADEQUATE PUBLIC LIGHTING LEVELS FOR THE DURATION OF THE WORKS. IF NECESSARY, THE ASP/1 IS TO ARRANGE FOR SUITABLE TEMPORARY STREET LIGHTING TO BE PROVIDED UNTIL PERMANENT LIGHTING IS RE-ESTABLISHED.
8. THIS INFORMATION INCLUDES DATA FROM THE NEW DIGITAL CADASTRAL DATABASE BY LAND AND PROPERTY INFORMATION © 2016, USED UNDER CREATIVE COMMONS LICENCE VERSION 4.0.
9. ALL ENQUIRES OR ISSUES RAISED REGARDING THE DESIGN & CONSTRUCTION OF THIS PROJECT TO BE DIRECTED TO SHELMERDINES CONSULTING ENGINEERS ON 9436 3021.

WARNING

- THIS DESIGN CANNOT BE USED FOR CONSTRUCTION PURPOSES UNTIL THE LOCATION OF ALL EXISTING SERVICES IS VERIFIED.
- THE INFORMATION PROVIDED IN THIS DESIGN MUST BE CHECKED ON SITE AND THE MOST CURRENT INFORMATION ON THE CONFIGURATION OF ALL SERVICES, INCLUDING AUSGRID'S NETWORK, MUST BE VERIFIED IMMEDIATELY BEFORE CONSTRUCTION COMMENCES BY CONTACTING DIAL-BEFORE-YOU-DIG BY TELEPHONE ON 1100 OR AT www.1100.com.au.
- DIAL-BEFORE-YOU-DIG INFORMATION MUST NOT BE OLDER THAN 20 BUSINESS DAYS AT THE TIME OF CONSTRUCTION.

ASP LEVEL 2 WORK

ALL LEVEL 2 ASP WORK DEPICTED ON THIS DRAWING IS SHOWN FOR INFORMATION PURPOSES ONLY AND DOES NOT FORM PART OF THE CERTIFIED DESIGN.

WARNING

THE PREPARATION OF THIS DESIGN HAS BEEN UNDERTAKEN GIVING DUE CONSIDERATION TO THE EXISTING SERVICES. THE PROJECT CONSTRUCTOR IS, HOWEVER, WHOLLY RESPONSIBLE FOR VERIFYING THE EXACT LOCATION OF EXISTING SERVICES AND PERMANENT SURVEY MARKS BEFORE CONSTRUCTION COMMENCES, AND NO RESPONSIBILITY NOR LIABILITY WILL BE ACCEPTED BY THE DESIGNER OF THE PROJECT FOR ACCURACY OF INFORMATION OR DAMAGE TO EXISTING SERVICES OR ASSETS SHOWN ON THIS DESIGN.

AREA OF WORKS

LOCALITY PLAN
UBD REF: 193 P3
N.T.S

CAD DRAWING
AMENDMENTS

DEVELOPER:

FRASERS PROPERTY

	PROPOSED	EXISTING
Pole		
SL Standard		
Pillar Standard		
LV Pillar		
LV Link Pillar		
Street Light		
Street Light - PEC		
Street Light - replacement		

	PROPOSED	EXISTING
Pole to be removed		
USL		
ABS		
IDT		
Kiosk Sub		
Chamber Sub		
Pole Sub		
Two Pole Sub		

	PROPOSED	EXISTING
UGOH	Pot End	Pot End
Joint	Sealed End	Sealed End
Conduit		
OH Lines	UG Cables	OH Lines / UG Cables
HV	HV	HV
LV	LV	LV
SL	SL	SL
SV	SV	SV

REMOVE
OH Lines: HV, LV, SL
UG Cables: HV, LV, SL
Joints: HV, LV, SL

ASSOCIATED DRAWINGS

LEVEL 3 ACCREDITED SERVICE PROVIDER

Shelmerdines Consulting Engineers

ABN 40 003 331 879
55 Hume Street
Crows Nest NSW 2065
Telephone: (02) 9436 3021
Email : mail@shelmerdines.com.au
Web : www.shelmerdines.com.au

ASP REF. 6820-AU-30/B

CERTIFICATION NUMBER 5596369/20210428

DESIGNED BY	DAVID TAYLOR
AUTH NO.	2606/02
SUBMIT DATE	20/04/2021
LGA	RYDE CITY COUNCIL
MAP REF.	196 P3
AUSGRID REF.	PY74
PRJTRAK No.	XCH014986

NEW CONDUITS
2 HERRING RD, MACQUARIE PARK
IVANHOE ESTATE

SIZE	AUSGRID PROJECT No.	SHEETS	AMD.
A1	AN-22381	1 of 3	0

20160817

CHECK FOR OTHER SERVICES BEFORE BORING OR EXCAVATING

ALL WORK TO BE UNDERTAKEN IN ACCORDANCE WITH AUSGRID'S NETWORK STANDARDS

WARNING

- THIS DESIGN CANNOT BE USED FOR CONSTRUCTION PURPOSES UNTIL THE LOCATION OF ALL EXISTING SERVICES IS VERIFIED.
- THE INFORMATION PROVIDED IN THIS DESIGN MUST BE CHECKED ON SITE AND THE MOST CURRENT INFORMATION ON THE CONFIGURATION OF ALL SERVICES, INCLUDING AUSGRID'S NETWORK, MUST BE VERIFIED IMMEDIATELY BEFORE CONSTRUCTION COMMENCES BY CONTACTING DIAL-BEFORE-YOU-DIG BY TELEPHONE ON 1100 OR AT www.1100.com.au.
- DIAL-BEFORE-YOU-DIG INFORMATION MUST NOT BE OLDER THAN 20 BUSINESS DAYS AT THE TIME OF CONSTRUCTION.

ASP LEVEL 2 WORK

ALL LEVEL 2 ASP WORK DEPICTED ON THIS DRAWING IS SHOWN FOR INFORMATION PURPOSES ONLY AND DOES NOT FORM PART OF THE CERTIFIED DESIGN.

FOR WORK NEAR TRANSMISSION CABLES IT IS COMPULSORY TO ARRANGE FOR AN AUSGRID REPRESENTATIVE TO ATTEND THE WORKSITE. IN THE SYDNEY AND CENTRAL COAST AREAS, CONTACT THE TRANSMISSION ON-CALL CONTACT ON PAGER (02) 4951 9200 TO ARRANGE FOR AN AUSGRID REPRESENTATIVE. FOR TRANSMISSION CABLES I N THE NEWCASTLE AND HUNTER AREAS, THE CORRECT NUMBER IS 0400 566 818. WHEREVER POSSIBLE, AUSGRID'S REPRESENTATIVE SHOULD BE BOOKED TWO WEEKS BEFORE WORK COMMENCES.

WARNING

THE PREPARATION OF THIS DESIGN HAS BEEN UNDERTAKEN GIVING DUE CONSIDERATION TO THE EXISTING SERVICES. THE PROJECT CONSTRUCTOR IS, HOWEVER, WHOLLY RESPONSIBLE FOR VERIFYING THE EXACT LOCATION OF EXISTING SERVICES AND PERMANENT SURVEY MARKS BEFORE CONSTRUCTION COMMENCES, AND NO RESPONSIBILITY NOR LIABILITY WILL BE ACCEPTED BY THE DESIGNER OF THE PROJECT FOR ACCURACY OF INFORMATION OR DAMAGE TO EXISTING SERVICES OR ASSETS SHOWN ON THIS DESIGN.

UNDERGROUND CONSTRUCTION WORKS SCHEDULE - DUCTPULL V.1.1

REF. IDENTIFIER	ROUTE DISTANCE (m)	CIRCUIT VOLTAGE	CONDUCTOR OR ASSET DETAIL	CABLE CODE	MIN. INTERNAL BENDING RADIUS (mm) DURING INSTALLATION	MIN. INTERNAL BENDING RADIUS (mm) AFTER INSTALLATION	CALCULATED MAX. PULLING TENSION (kN) DURING INSTALLATION	CONSTRUCTION DETAIL
A-B	105.3	-	EXCAVATE AND INSTALL 4 x 150mm PVC CONDUITS EXCAVATE AND INSTALL 1 x 50mm PVC CONDUITS	-	-	-	-	EXCAVATE AND INSTALL 4x150mm AND 1x50mm CONDUITS BETWEEN POINTS 'A' AND 'B' AS PER SECTION 'A-A'.
B-C	11.5	-	EXCAVATE AND INSTALL 4 x 150mm PVC CONDUITS EXCAVATE AND INSTALL 1 x 50mm PVC CONDUITS	-	-	-	-	EXCAVATE AND INSTALL 4x150mm AND 1x50mm CONDUITS BETWEEN POINTS 'B' AND 'C' AS PER SECTION 'A-A'.
C-D	18.0	-	EXCAVATE AND INSTALL 4 x 150mm PVC CONDUITS EXCAVATE AND INSTALL 1 x 50mm PVC CONDUITS	-	-	-	-	EXCAVATE AND INSTALL 4x150mm AND 1x50mm CONDUITS BETWEEN POINTS 'C' AND 'D' AS PER SECTION 'B-B'.
D-E	63.8	-	EXCAVATE AND INSTALL 4 x 150mm PVC CONDUITS EXCAVATE AND INSTALL 1 x 50mm PVC CONDUITS	-	-	-	-	EXCAVATE AND INSTALL 4x150mm AND 1x50mm CONDUITS BETWEEN POINTS 'D' AND 'E' AS PER SECTION 'A-A'.
F-G	15.1	-	EXCAVATE AND INSTALL 4 x 150mm PVC CONDUITS EXCAVATE AND INSTALL 1 x 50mm PVC CONDUITS	-	-	-	-	EXCAVATE AND INSTALL 4x150mm AND 1x50mm CONDUITS BETWEEN POINTS 'F' AND 'G' AS PER SECTION 'A-A'.
G-H	106.6	-	EXCAVATE AND INSTALL 4 x 150mm PVC CONDUITS EXCAVATE AND INSTALL 1 x 50mm PVC CONDUITS	-	-	-	-	EXCAVATE AND INSTALL 4x150mm AND 1x50mm CONDUITS BETWEEN POINTS 'G' AND 'H' AS PER SECTION 'A-A'.
H-I	9.7	-	EXCAVATE AND INSTALL 4 x 150mm PVC CONDUITS EXCAVATE AND INSTALL 1 x 50mm PVC CONDUITS	-	-	-	-	EXCAVATE AND INSTALL 4x150mm AND 1x50mm CONDUITS BETWEEN POINTS 'H' AND 'I' AS PER SECTION 'B-B'.
I-J	106.6	-	EXCAVATE AND INSTALL 4 x 150mm PVC CONDUITS EXCAVATE AND INSTALL 1 x 50mm PVC CONDUITS	-	-	-	-	EXCAVATE AND INSTALL 4x150mm AND 1x50mm CONDUITS BETWEEN POINTS 'I' AND 'J' AS PER SECTION 'A-A'.
G-J	9.7	-	EXCAVATE AND INSTALL 4 x 150mm PVC CONDUITS EXCAVATE AND INSTALL 1 x 50mm PVC CONDUITS	-	-	-	-	EXCAVATE AND INSTALL 4x150mm AND 1x50mm CONDUITS BETWEEN POINTS 'G' AND 'J' AS PER SECTION 'B-B'.
E-J	11.3	-	EXCAVATE AND INSTALL 4 x 150mm PVC CONDUITS EXCAVATE AND INSTALL 1 x 50mm PVC CONDUITS	-	-	-	-	EXCAVATE AND INSTALL 4x150mm AND 1x50mm CONDUITS BETWEEN POINTS 'E' AND 'J' AS PER SECTION 'B-B'.
J-K	62.0	-	EXCAVATE AND INSTALL 4 x 150mm PVC CONDUITS EXCAVATE AND INSTALL 1 x 50mm PVC CONDUITS	-	-	-	-	EXCAVATE AND INSTALL 4x150mm AND 1x50mm CONDUITS BETWEEN POINTS 'J' AND 'K' AS PER SECTION 'A-A'.
D-K	10.6	-	EXCAVATE AND INSTALL 4 x 150mm PVC CONDUITS EXCAVATE AND INSTALL 1 x 50mm PVC CONDUITS	-	-	-	-	EXCAVATE AND INSTALL 4x150mm AND 1x50mm CONDUITS BETWEEN POINTS 'D' AND 'K' AS PER SECTION 'B-B'.
B-K	18.0	-	EXCAVATE AND INSTALL 4 x 150mm PVC CONDUITS EXCAVATE AND INSTALL 1 x 50mm PVC CONDUITS	-	-	-	-	EXCAVATE AND INSTALL 4x150mm AND 1x50mm CONDUITS BETWEEN POINTS 'B' AND 'K' AS PER SECTION 'B-B'.

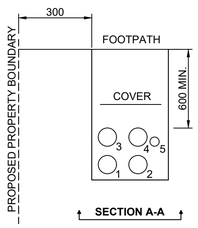

1 - NEW 150mm PVC CONDUIT - SPARE
2 - NEW 150mm PVC CONDUIT - SPARE
3 - NEW 150mm PVC CONDUIT - SPARE
4 - NEW 150mm PVC CONDUIT - SPARE
5 - NEW 50mm PVC CONDUIT - SPARE

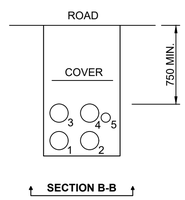

1 - NEW 150mm PVC CONDUIT - SPARE
2 - NEW 150mm PVC CONDUIT - SPARE
3 - NEW 150mm PVC CONDUIT - SPARE
4 - NEW 150mm PVC CONDUIT - SPARE
5 - NEW 50mm PVC CONDUIT - SPARE

DEVELOPER:

FRASERS PROPERTY

CAD DRAWING

AMENDMENTS

ASSOCIATED DRAWINGS

LEVEL 3 ACCREDITED SERVICE PROVIDER

Shelmerdines Consulting Engineers

ABN 40 003 331 879

55 Hume Street
Crows Nest NSW 2065

Telephone: (02) 9436 3021
Email : mail@shelmerdines.com.au
Web : www.shelmerdines.com.au

ASP REF. 6820-AU-31/B

CERTIFICATION NUMBER 5596369/20210428

DESIGNED BY	DAVID TAYLOR
AUTH NO.	2606/02
SUBMIT DATE	20/04/2021
LGA	RYDE CITY COUNCIL
MAP REF.	196 P3
AUSGRID REF.	PY74
PRJTRAK No.	XCH014986

NEW CONDUITS
2 HERRING RD, MACQUARIE PARK
IVANHOE ESTATE

SIZE A1 | AUSGRID PROJECT No. AN-22381 | SHEETS 2 of 3 | AMD. 0

20160817

CHECK FOR OTHER SERVICES BEFORE BORING OR EXCAVATING

ALL WORK TO BE UNDERTAKEN IN ACCORDANCE WITH AUSGRID'S NETWORK STANDARDS

PROPERTY RIGHTS

SCALE 1 : 500

0 10 20 30 40 50 METRES

WARNING

- THIS DESIGN CANNOT BE USED FOR CONSTRUCTION PURPOSES UNTIL THE LOCATION OF ALL EXISTING SERVICES IS VERIFIED.
- THE INFORMATION PROVIDED IN THIS DESIGN MUST BE CHECKED ON SITE AND THE MOST CURRENT INFORMATION ON THE CONFIGURATION OF ALL SERVICES, INCLUDING AUSGRID'S NETWORK, MUST BE VERIFIED IMMEDIATELY BEFORE CONSTRUCTION COMMENCES BY CONTACTING DIAL-BEFORE-YOU-DIG BY TELEPHONE ON 1100 OR AT www.1100.com.au.
- DIAL-BEFORE-YOU-DIG INFORMATION MUST NOT BE OLDER THAN 20 BUSINESS DAYS AT THE TIME OF CONSTRUCTION.

ASP LEVEL 2 WORK

ALL LEVEL 2 ASP WORK DEPICTED ON THIS DRAWING IS SHOWN FOR INFORMATION PURPOSES ONLY AND DOES NOT FORM PART OF THE CERTIFIED DESIGN.

FOR WORK NEAR TRANSMISSION CABLES IT IS COMPULSORY TO ARRANGE FOR AN AUSGRID REPRESENTATIVE TO ATTEND THE WORKSITE. IN THE SYDNEY AND CENTRAL COAST AREAS, CONTACT THE TRANSMISSION ON-CALL CONTACT ON PAGER (02) 4951 9200 TO ARRANGE FOR AN AUSGRID REPRESENTATIVE. FOR TRANSMISSION CABLES I N THE NEWCASTLE AND HUNTER AREAS, THE CORRECT NUMBER IS 0400 566 818. WHEREVER POSSIBLE, AUSGRID'S REPRESENTATIVE SHOULD BE BOOKED TWO WEEKS BEFORE WORK COMMENCES.

WARNING

THE PREPARATION OF THIS DESIGN HAS BEEN UNDERTAKEN GIVING DUE CONSIDERATION TO THE EXISTING SERVICES. THE PROJECT CONSTRUCTOR IS, HOWEVER, WHOLLY RESPONSIBLE FOR VERIFYING THE EXACT LOCATION OF EXISTING SERVICES AND PERMANENT SURVEY MARKS BEFORE CONSTRUCTION COMMENCES, AND NO RESPONSIBILITY NOR LIABILITY WILL BE ACCEPTED BY THE DESIGNER OF THE PROJECT FOR ACCURACY OF INFORMATION OR DAMAGE TO EXISTING SERVICES OR ASSETS SHOWN ON THIS DESIGN.

LEGEND

'A' - NEW CABLE EASEMENT FOR ELECTRICITY PURPOSES 1.2m WIDE OVER ELECTRICAL ALLOCATION OF PROPOSED PROPERTY BOUNDARIES OR CENTRED OVER CONDUITS FOR ROAD CROSSINGS. EASEMENT TO BE CONFIRMED BY SURVEYOR BASED ON PROPOSED PROPERTY BOUNDARIES.

'B' - NEW RIGHT OF WAY (4.5m WIDE).

DEVELOPER:

FRASERS PROPERTY

CAD DRAWING

AMENDMENTS

ASSOCIATED DRAWINGS

LEVEL 3 ACCREDITED SERVICE PROVIDER

Shelmerdines Consulting Engineers

ABN 40 003 331 879

55 Hume Street
Crows Nest NSW 2065

Telephone: (02) 9436 3021
Email : mail@shelmerdines.com.au
Web : www.shelmerdines.com.au

ASP REF. 6820-AU-32/B

DESIGNED BY	DAVID TAYLOR
AUTH NO.	2606/02
SUBMIT DATE	20/04/2021
LGA	RYDE CITY COUNCIL
MAP REF.	196 P3
AUSGRID REF.	PY74
PRJTRAK No.	XCH014986

CERTIFICATION NUMBER 5596369/20210428

NEW CONDUITS
2 HERRING RD, MACQUARIE PARK
IVANHOE ESTATE

SIZE A1 | AUSGRID PROJECT No. AN-22381 | SHEETS 3 of 3 | AMD. 0

20160817

©

2.20 Visual and aesthetics

- (●) Level 1 - No potential impacts identified
- ( ) Level 2 - Impacts would be avoided / minimised. Specific controls may be required.
- ( ) Level 3 - Referral to Environmental Services for further assessment

Description of potential impacts	Specific construction controls
The proposal would NOT involve any of the following: -impacting areas of high aesthetic, scenic, natural or recreational value. -materially impacting a property owners view of waterways or scenic areas. -impacting views where property owners are likely to raise concerns.	NS174C Environmental Handbook applies

2.21 Other issues

- (●) Level 1 - No potential impacts identified
- ( ) Level 2 - Impacts would be avoided / minimised. Specific controls may be required.
- ( ) Level 3 - Referral to Environmental Services for further assessment

Description of potential impacts	Specific construction controls
There are no other environmental issues that have impacts associated with the proposal (as identified by WebGIS EL report, consultation process, site inspection and other means).	NS174C Environmental Handbook applies

Cumulative

2.22 Cumulative impact

- (●) Level 1 - No potential impacts identified
- ( ) Level 2 - Impacts would be avoided / minimised. Specific controls may be required.
- ( ) Level 3 - Referral to Environmental Services for further assessment

Description of potential impacts	Specific construction controls
There are no other projects/proposals that have impacts that could interact with this project (as identified by the consultation process, site inspection and other means).	NS174C Environmental Handbook applies

Attachments - Env GIS Analytical Report, Design Drawing (<10MB total)

Remove	Download	File Name	6820 - Council.pdf
File Size:	643.811 K	Description *	Notification
Remove	Download	File Name	6820 - Council Response.pdf
File Size:	253.632 K	Description *	Council response
Remove	Download	File Name	6820 - ANXXXX - WebGIS EL.pdf
File Size:	641.191 K	Description *	AN22381 WebGIS
Remove	Download	File Name	AN22381_6820.pdf
File Size:	784.862 K	Description *	PDF

Attachments Size: 2323.496 K

Eric Hausfeld

From: Chris Koukoutaris <Chris.Koukoutaris@frasersproperty.com.au>
Sent: Wednesday, 18 August 2021 5:31 PM
To: Eric Hausfeld
Cc: Peter Statham; Stephen Peters
Subject: RE: AN-22381 NORTH RYDE - Certified Design - 2 EPPING ROAD, NORTH RYDE

No gas on the development

Chris Koukoutaris
Senior Development Manager
Frasers Property Australia

T +61 2 9767 2223 **M** +61 434 034 371
E Chris.Koukoutaris@frasersproperty.com.au
Level 2, 1C Homebush Bay Drive, Rhodes NSW 2138 Australia
www.frasersproperty.com.au | LinkedIn | YouTube

From: Eric Hausfeld <Eric@LDC.com.au>
Sent: Wednesday, 18 August 2021 5:30 PM
To: Chris Koukoutaris <Chris.Koukoutaris@frasersproperty.com.au>
Cc: Peter Statham <Peter.Statham@frasersproperty.com.au>; Stephen Peters <Stephen.Peters@frasersproperty.com.au>
Subject: RE: AN-22381 NORTH RYDE - Certified Design - 2 EPPING ROAD, NORTH RYDE

EXTERNAL EMAIL: Do not click links or open attachments unless you recognise the sender and know the content is safe.

Thanks Chris. I have closed out water, sewer and electrical. Peter I understand is following up with telecoms.

Has there been any approach to supply gas to this development?

Eric Hausfeld
Director/Registered Certifier

LAND DEVELOPMENT CERTIFICATES

Suite 7, 76 Henry Street, Penrith |PO Box 125, Penrith NSW 2751 |Phone: 02 4722 8278 |**www.Ldc.com.au**

This email and its attachments may contain confidential and/or privileged information for the sole use of the intended recipient(s). If you are not the intended recipient, any use, distribution or copying of the information contained in this email and its attachments Is strictly prohibited. If you have received this email in error, please email the sender by replying to this message and immediately delete and destroy any copies of this email and any attachments.

iGuzzini
PARTNER
illuminotecnica
NSW VIC QLD

CITY OF RYDE
APPROVED FOR CONSTRUCTION
LDA.....
Signed.....
Date.....01 OCT 2021.....
Subject to the Conditions
of Development Consent

Project – Ivanhoe Bridge – Macquarie Park

Hi David,

Please see below our summary in response to comments from council review.

1. **Compliance with Section 4.1 of AS/NZS 1158.3.1:2005**

We have provided the luminaire Data Sheet, IES files and also relevant Intensity Table as part of our calculation in compliance with section 4.1 AS/NZS 1158.3 1:2005

An IES test file for article code E493 was last conducted on the 25.4.2021 as per IESNA TM-62-2002 standards.

An internal data base error previously offered old IES data from 2015, this has now been updated and used in the latest REV 3 calculation.

Article Code E493 is a Type 2 Luminaire as per table.2.10 AS/NZS 1158.3.1.2005

2. **No evidence has been provided as to why a Type 2 luminaire would be appropriate for the installation**

A type 2 luminaire has been used in this instance to satisfy the P lighting categories at each end of the pedestrian walkway of the bridge in combination with the Type 4 lighting.

This Type 2 luminaire is mounted within the underside of the handrail and facing straight down.

Any perceived impact of upward light ratio / glare is mitigated by the luminaire being shielded within the handrail itself.

The luminaire data (Article Code E493) used for lighting calculations has been photometered with the luminaire set inside the handrail channel that it is to be installed in (handrail details as shown in the electrical package 6820-ES-401,402, 402).

Article code E493 must align with the underside of the handrail detail as per the calculation.

3. **The UWLR is more than double that allowable by a Type 4 luminaire and no evidence has been provided as to why a Type 2 luminaire is deemed appropriate nor why Council should accept this much higher value contrary to the Design Guide**

The luminaire is a Type 2 luminaire and is not bound by the same UWLR limitation as a Type 4 street light, it is being used in a specific architectural application as mentioned in part 2 above.

There is no reference for the <u>use or non-use</u> of Type 2 luminaires for this application within the council design guide.

We have met the technical requirements of the P category as required by the standards in this instance.

I have included the latest REV3 calculation with this letter that provides the combined lighting of both the Type 4 street lights and the Type 2 Pedestrian lighting.

I have also included the IES file, dated 25.04.21 for your reference and as well as the luminaire data sheet once again.

Should you require anything further please let me know?

Regards,

M. Cameron

CITY OF RYDE
APPROVED FOR CONSTRUCTION
LDA.....
Signed.....
Date 01 OCT 2021
Subject to the Conditions of Development Consent

Murray Cameron

Mobile - 0499 001 007

DIAL BEFORE YOU DIG
www.1100.com.au

City of Ryde

PUBLIC LIGHTING DESIGN
IVANHOE ESTATE
MACQUARIE PARK

DETAILED LIGHTING DESIGN
SSDA - 8903

LOCATION OF WORKS

SHEET INDEX

SHEET NUMBER	DESCRIPTION	REV
6820-ES-301	COVER SHEET	D
6820-ES-302	LEGEND, WORKS SCHEDULE AND TRENCH SECTIONS	D
6820-ES-303	SITE PLAN 1	D
6820-ES-304	SITE PLAN 2	D
6820-ES-305	SITE PLAN 3	D
6820-ES-306	SITE PLAN 4	E
6820-ES-307	SITE PLAN 5 AND BRIDGE DETAILS	E
6820-ES-308	COLUMN AND FOUNDATION DETAILS	D
6820-ES-309	SINGLE LINE DIAGRAMS, SWITCHBOARD AND WIRING DETAILS	E
6820-ES-310	GENERAL NOTES SHEET 1	C
6820-ES-311	GENERAL NOTES SHEET 2	C
6820-ES-312	ISOLUX DIAGRAMS AND LUMINAIRE SCHEDULES	D
6820-ES-313	PEDESTRIAN LIGHTING CALCULATIONS	C
6820-ES-314	STREET LIGHTING CALCULATIONS SHEET 1	D
6820-ES-315	STREET LIGHTING CALCULATIONS SHEET 2	E
6820-ES-316	DESIGN CERTIFICATE	B
6820-ES-317	CIRCUIT DIAGRAM	C

CITY OF RYDE
APPROVED FOR CONSTRUCTION
LDA.....
Signed.....
Date.....04 JUN 2021.....
Subject to the Conditions of Development Consent

No.	Description	Drn	Ckd	Date
A	FOR APPROVAL	EW	DT	07.04.20
B	SHEET INDEX UPDATED	EW	DT	13.05.20
C	SHEET INDEX UPDATED	EW	DT	19.06.20
D	SHEET INDEX UPDATED	EW	DT	22.06.20
E	SHEET INDEX UPDATED	EW	DT	20.05.21
F	SHEET INDEX UPDATED	EW	DT	01.06.21

No.	Description	Drn	Ckd	Date

CLIENT: FRASERS PROPERTY

ELECTRICAL CONSULTING ENGINEERS
Shelmerdines Consulting Engineers
ABN 40 003 331 879
55 Hume Street
Crows Nest NSW 2065
Telephone: (02) 9436 3021
Email: mail@shelmerdines.com.au
Web: www.shelmerdines.com.au

PROJECT
IVANHOE ESTATE
MACQUARIE PARK
DETAILED LIGHTING DESIGN
FOR CITY OF RYDE COUNCIL

DRAWING
ELECTRICAL SERVICES
COVER SHEET

DATE	SCALE
FEB 2018	NTS @ A1
DRAWN: EW	CHECKED: DT
DRAWING NUMBER: 6820-ES-301	ISSUE NUMBER: F

LEGEND:

1M. TYPE 1M LUMINAIRE – NEW 133 WATT 4000'K LED STREETLIGHT EQUAL TO GERARD LIGHTING ATB2 R3 IN SELECTED COLOUR. LUMINAIRE SHALL HAVE A 7–PIN PHOTO RECEPTACLE AND RF NODE IN ORDER TO SUPPORT A 'SMART CONTROL' SYSTEM. INSTALL A CIMCON MODEL NODE iSLC–3100–7P–S–xxx–A–G–10–CATB–05 AND PLAY WIRELESS LIGHTING CONTROLLER. LUMINAIRE TO BE MOUNTED AT 10.5m AFFL ON MFP SYSTEMS (SUPPLIER) 12m ALUMINIUM MID–BLOCK POLE (P/N: MFP–048) AND OFF A 3m OUTREACH ARM. 1.5m BANNER ARMS SHALL BE PROVIDED AND MOUNTED AT 10m AFFL. POLE TO BE BE INSTALLED 750 FROM FACE OF KERB TO FACE OF POLE UNLESS OTHERWISE SPECIFIED.

1C. TYPE 1C LUMINAIRE – NEW 133 WATT 4000'K LED STREETLIGHT EQUAL TO GERARD LIGHTING ATB2 R3 IN SELECTED COLOUR. LUMINAIRE SHALL HAVE A 7–PIN PHOTO RECEPTACLE AND RF NODE IN ORDER TO SUPPORT A 'SMART CONTROL' SYSTEM. INSTALL A CIMCON MODEL NODE iSLC–3100–7P–S–xxx–A–G–10–CATB–05 AND PLAY WIRELESS LIGHTING CONTROLLER. LUMINAIRE TO BE MOUNTED AT 10.5m AFFL ON MFP SYSTEMS (SUPPLIER) 12m ALUMINIUM CORNER BLOCK POLE (P/N: MFP–015) AND OFF A 3m OUTREACH ARM. 1.5m BANNER ARMS SHALL BE PROVIDED AND MOUNTED AT 10m AFFL. POLE TO BE BE INSTALLED 1000 FROM FACE OF KERB TO FACE OF POLE UNLESS OTHERWISE SPECIFIED.

2M. TYPE 2M LUMINAIRE – NEW 133 WATT 4000'K LED STREETLIGHT EQUAL TO GERARD LIGHTING ATB2 R3 IN SELECTED COLOUR. LUMINAIRE SHALL HAVE A 7–PIN PHOTO RECEPTACLE AND RF NODE IN ORDER TO SUPPORT A 'SMART CONTROL' SYSTEM. INSTALL A CIMCON MODEL NODE iSLC–3100–7P–S–xxx–A–G–10–CATB–05 AND PLAY WIRELESS LIGHTING CONTROLLER. LUMINAIRE TO BE MOUNTED AT 9.0m AFFL ON MFP SYSTEMS (SUPPLIER) 9.6m ALUMINIUM MID–BLOCK POLE (P/N: MFP–016) AND OFF A 3m OUTREACH ARM. 1.5m BANNER ARMS SHALL BE PROVIDED AND MOUNTED AT 8.5m AFFL. POLE TO BE BE INSTALLED 750 FROM FACE OF KERB TO FACE OF POLE UNLESS OTHERWISE SPECIFIED.

2C. TYPE 2C LUMINAIRE – NEW 133 WATT 4000'K LED STREETLIGHT EQUAL TO GERARD LIGHTING ATB2 R3 IN SELECTED COLOUR. LUMINAIRE SHALL HAVE A 7–PIN PHOTO RECEPTACLE AND RF NODE IN ORDER TO SUPPORT A 'SMART CONTROL' SYSTEM. INSTALL A CIMCON MODEL NODE iSLC–3100–7P–S–xxx–A–G–10–CATB–05 AND PLAY WIRELESS LIGHTING CONTROLLER. LUMINAIRE TO BE MOUNTED AT 9.0m AFFL ON MFP SYSTEMS (SUPPLIER) 9.6m ALUMINIUM CORNER BLOCK POLE (P/N: MFP–022) AND OFF A 3m OUTREACH ARM. 1.5m BANNER ARMS SHALL BE PROVIDED AND MOUNTED AT 8.5m AFFL. POLE TO BE BE INSTALLED 1000 FROM FACE OF KERB TO FACE OF POLE UNLESS OTHERWISE SPECIFIED.

3M. TYPE 3M LUMINAIRE – NEW 133 WATT 4000'K LED STREETLIGHT EQUAL TO GERARD LIGHTING ATB2 R3 IN SELECTED COLOUR AND NEW 110 WATT 4000'K LED FLOODLIGHT EQUAL TO SYLVANIA SASTALED PEDX FLOODLIGHT. STREETLIGHT SHALL HAVE A 7–PIN PHOTO RECEPTACLE AND RF NODE IN ORDER TO SUPPORT A 'SMART CONTROL' SYSTEM. INSTALL A CIMCON MODEL NODE iSLC–3100–7P–S–xxx–A–G–10–CATB–05 AND PLAY WIRELESS LIGHTING CONTROLLER. STREETLIGHT TO BE MOUNTED AT 10.5m AFFL ON MFP SYSTEMS (SUPPLIER) 12.0m ALUMINIUM MID–BLOCK POLE (P/N: MFP–048) AND OFF A 3m OUTREACH ARM. FLOODLIGHT TO BE MOUNTED AT 6.0m AFFL OFF A 3m OUTREACH ARM. POLE TO BE BE INSTALLED 750 FROM FACE OF KERB TO FACE OF POLE UNLESS OTHERWISE SPECIFIED.

4M. TYPE 4M LUMINAIRE – NEW 133 WATT 4000'K LED STREETLIGHT EQUAL TO GERARD LIGHTING ATB2 R3 IN SELECTED COLOUR AND NEW 110 WATT 4000'K LED FLOODLIGHT EQUAL TO SYLVANIA SASTALED PEDX FLOODLIGHT. STREETLIGHT SHALL HAVE A 7–PIN PHOTO RECEPTACLE AND RF NODE IN ORDER TO SUPPORT A 'SMART CONTROL' SYSTEM. INSTALL A CIMCON MODEL NODE iSLC–3100–7P–S–xxx–A–G–10–CATB–05 AND PLAY WIRELESS LIGHTING CONTROLLER. STREETLIGHT TO BE MOUNTED AT 9.0m AFFL ON MFP SYSTEMS (SUPPLIER) 9.6m ALUMINIUM MID–BLOCK POLE (P/N: MFP–016) AND OFF A 3m OUTREACH ARM. FLOODLIGHT TO BE MOUNTED AT 6.0m AFFL OFF A 3m OUTREACH ARM. POLE TO BE BE INSTALLED 750 FROM FACE OF KERB TO FACE OF POL UNLESS OTHERWISE SPECIFIEDE.

5M. TYPE 5M LUMINAIRE – NEW 110 WATT 4000'K LED FLOODLIGHT EQUAL TO SYLVANIA SASTALED PEDX FLOODLIGHT IN SELECTED COLOUR. LUMINAIRE TO BE MOUNTED AT 6.0m AFFL ON MFP SYSTEMS (SUPPLIER) 9.6m ALUMINIUM MID–BLOCK POLE (P/N: MFP–016) AND OFF A 3m OUTREACH ARM. POLE TO BE BE INSTALLED 750 FROM FACE OF KERB TO FACE OF POLE UNLESS OTHERWISE SPECIFIED.

5C. TYPE 5C LUMINAIRE – NEW 110 WATT 4000'K LED FLOODLIGHT EQUAL TO SYLVANIA SASTALED PEDX FLOODLIGHT IN SELECTED COLOUR. LUMINAIRE TO BE MOUNTED AT 6.0m AFFL ON MFP SYSTEMS (SUPPLIER) 9.6m ALUMINIUM CORNER BLOCK POLE (P/N: MFP–022) AND OFF A 3m OUTREACH ARM. POLE TO BE BE INSTALLED 1000 FROM FACE OF KERB TO FACE OF POLE UNLESS OTHERWISE SPECIFIED.

NEW RYDE COUNCIL PUBLIC LIGHTING MAIN SWITCHBOARD

NEW LV PILLAR (AUSGRID – FOR SUPPLY CONNECTION, ASP LEVEL 2 TO PROVIDE CONNECTION)

NEW PVC CONDUITS/TRENCH

—SL— NEW STREET LIGHTING CIRCUIT

DIAL BEFORE YOU DIG www.1100.com.au

CITY OF RYDE
APPROVED FOR CONSTRUCTION
LDA.....
Signed.....
Date.....04 JUN 2021
Subject to the Conditions of Development Consent

WORKS SCHEDULE

REF. IDENTIFIER	ROUTE DISTANCE (m)	CONDUCTOR OR ASSET DETAIL	CONSTRUCTION DETAIL
A	-	2 X LIGHTING SWITCHBOARDS	INSTALL 1 X CITY OF RYDE LIGHTING SWITCHBOARD AND 1 X ROAD NO.2 LIGHTING SWITCHBOARD. ROAD NO.2 SWITCHBOARD TO BE CITY OF RYDE STYLE LIGHTING SWITCHBOARD AND LOCATED ADJACENT TO THE CITY OF RYDE LIGHTING SWITCHBOARD WITH 100mm SEPARATION. REFER TO SHEET 6820–ES–309 FOR DETAILS.
A–B	20.0	6 X 63mm CONDUITS	TRENCH AND INSTALL CONDUIT AS PER TRENCH CROSS SECTION A–A.
B–C	13.0	4 X 63mm CONDUITS	TRENCH AND INSTALL CONDUIT AS PER TRENCH CROSS SECTION B–B.
C–D	22.0	4 X 63mm CONDUITS	TRENCH AND INSTALL CONDUIT AS PER TRENCH CROSS SECTION C–C.
C–E	12.0	4 X 63mm CONDUITS	TRENCH AND INSTALL CONDUIT AS PER TRENCH CROSS SECTION E–E.
E–F	53.0	4 X 63mm CONDUITS	TRENCH AND INSTALL CONDUIT AS PER TRENCH CROSS SECTION N–N.
E–G, G–H, H–I, I–J, J–J1, J1–K, K–L, L–L1, L1–M,	4.0 12.5 27.0 73.0 8.0 4.5 62.0 45.0 56.0	4 X 63mm CONDUITS	TRENCH AND INSTALL CONDUIT AS PER TRENCH CROSS SECTION D–D.
B–N	11.5	6 X 63mm CONDUITS	TRENCH AND INSTALL CONDUIT AS PER TRENCH CROSS SECTION F–F.
N–O, O–P P–P1, P1–Q, Q–R, R–S, S–T	15.0 52.0 44.0 16.0 28.0 32.0 14.0	4 X 63mm CONDUITS	TRENCH AND INSTALL CONDUIT AS PER TRENCH CROSS SECTION I–I.
T–U	8.5	4 X 63mm CONDUITS	TRENCH AND INSTALL CONDUIT AS PER TRENCH CROSS SECTION K–K.
U–V, V–W, W–X	8.0 32.5 32.5	4 X 63mm CONDUITS	TRENCH AND INSTALL CONDUIT AS PER TRENCH CROSS SECTION L–L.
X–Y	57.0	3 X 63mm CONDUITS	TRENCH AND INSTALL CONDUIT AS PER BRIDGE CROSS SECTION X1–X1. REFER TO SHEET 6820–ES–307.
Y–Z, Z–Aa, Aa–Ab, Ab–Ac	9.0 25.0 34.0 34.0	3 X 63mm CONDUITS	TRENCH AND INSTALL CONDUIT AS PER TRENCH CROSS SECTION M–M.
N–Ag, Ag–Ah	30.0 33.0	4 X 63mm CONDUITS	TRENCH AND INSTALL CONDUIT AS PER TRENCH CROSS SECTION D–D.
Ah–Ai	7.5	4 X 63mm CONDUITS	TRENCH AND INSTALL CONDUIT AS PER TRENCH CROSS SECTION G–G.
Ai–Aj	8.0	4 X 63mm CONDUITS	TRENCH AND INSTALL CONDUIT AS PER TRENCH CROSS SECTION J–J.
Aj–Ak	2.5	4 X 63mm CONDUITS	TRENCH AND INSTALL CONDUIT AS PER TRENCH CROSS SECTION D–D.
Ak–Al, Al–Am, Am–An, An–An1, An1–Ao, Ao–Ap, Ap–Ar, Ar–As, As–As1, As1–Af Af–Ae Ae–Ad	30.0 30.0 31.0 16.0 15.0 17.0 12.0 31.0 24.0 14.0 25.0 33.0	4 X 63mm CONDUITS	TRENCH AND INSTALL CONDUIT AS PER TRENCH CROSS SECTION D–D.
Ad–U	7.0	4 X 63mm CONDUITS	TRENCH AND INSTALL CONDUIT AS PER TRENCH CROSS SECTION O–O.
Ap–32	9.5	4 X 63mm CONDUITS 2 X 50mm CONDUITS	TRENCH AND INSTALL CONDUIT AS PER TRENCH CROSS SECTION J–J.
F–2, G–3	3.5	4 X 63mm CONDUITS 2 x 50mm CONDUITS	TRENCH AND INSTALL CONDUIT AS PER TRENCH CROSS SECTION G–G.
D–1, H–4, I–5, J–6, K–7,L–8, O–10, P–11, Q–12, R–13, S–14, V–15, & W–16	2.5	4 X 63mm CONDUITS 2 X 50mm CONDUITS	TRENCH AND INSTALL CONDUIT AS PER TRENCH CROSS SECTION G–G.
M–9	6.5	4 X 63mm CONDUITS 2 X 50mm CONDUITS	TRENCH AND INSTALL CONDUIT AS PER TRENCH CROSS SECTION H–H.
Y–17, Ac–20, N–24	1.0	4 X 63mm CONDUITS 2 X 50mm CONDUITS	TRENCH AND INSTALL CONDUIT AS PER TRENCH CROSS SECTION G–G.
Aa–18, Ab–19, Ad–21, Ae–22, Af–23, P–24, Ag–25, Ah–26, Ak–27, Al–28, Am–29, An–30, Ao–31, Ar–33, & As–34	1.5	4 X 63mm CONDUITS 2 X 50mm CONDUITS	TRENCH AND INSTALL CONDUIT AS PER TRENCH CROSS SECTION G–G.
A–1	64.0	4x16 CU1+E	INSTALL CABLE IN CONDUIT AS PER TRENCH CROSS SECTIONS A–A, B–B & C–C.
1–2	95.0	4x16 CU1+E	INSTALL CABLE IN CONDUIT AS PER TRENCH CROSS SECTIONS C–C, E–E, H–H & N–N.
2–3	65.5	4x16 CU1+E	INSTALL CABLE IN CONDUIT AS PER TRENCH CROSS SECTIONS G–G & N–N.
3–4	17.0	4x16 CU1+E	INSTALL CABLE IN CONDUIT AS PER TRENCH CROSS SECTIONS D–D & G–G.
4–5	32.0	4x16 CU1+E	INSTALL CABLE IN CONDUIT AS PER TRENCH CROSS SECTIONS D–D & G–G.
5–6	78.0	4x16 CU1+E	INSTALL CABLE IN CONDUIT AS PER TRENCH CROSS SECTIONS D–D & G–G.
6–7	19.0	4x16 CU1+E	INSTALL CABLE IN CONDUIT AS PER TRENCH CROSS SECTIONS D–D & G–G.
7–8	68.0	4x16 CU1+E	INSTALL CABLE IN CONDUIT AS PER TRENCH CROSS SECTIONS D–D & G–G.
8–9	114.0	4x16 CU1+E	INSTALL CABLE IN CONDUIT AS PER TRENCH CROSS SECTIONS D–D & G–G.
A–10	55.0	4x16 CU1+E	INSTALL CABLE IN CONDUIT AS PER TRENCH CROSS SECTIONS D–D & G–G.
10–11	56.0	4x16 CU1+E	INSTALL CABLE IN CONDUIT AS PER TRENCH CROSS SECTIONS D–D & H–H.
11–12	66.0	4x16 CU1+E	INSTALL CABLE IN CONDUIT AS PER TRENCH CROSS SECTIONS A–A, F–F, G–G & I–I.
12–13	32.0	4x16 CU1+E	INSTALL CABLE IN CONDUIT AS PER TRENCH CROSS SECTIONS G–G & I–I.
13–14	36.0	4x16 CU1+E	INSTALL CABLE IN CONDUIT AS PER TRENCH CROSS SECTIONS G–G & I–I.
14–15	36.0	4x16 CU1+E	INSTALL CABLE IN CONDUIT AS PER TRENCH CROSS SECTIONS G–G & I–I.
15–16	36.0	4x16 CU1+E	INSTALL CABLE IN CONDUIT AS PER TRENCH CROSS SECTIONS G–G, I–I, K–K & L–L.
16–17	94.0	4x16 CU1+E	INSTALL CABLE IN CONDUIT AS PER TRENCH CROSS SECTIONS G–G, L–L & X1–X1.
17–18	37.0	4x16 CU1+E	INSTALL CABLE IN CONDUIT AS PER TRENCH CROSS SECTIONS G–G & M–M.
18–19	36.0	4x16 CU1+E	INSTALL CABLE IN CONDUIT AS PER TRENCH CROSS SECTIONS G–G & M–M.
19–20	36.0	4x16 CU1+E	INSTALL CABLE IN CONDUIT AS PER TRENCH CROSS SECTIONS G–G, H–H & M–M.
A–X	332.0	4x16 CU1+E	INSTALL CABLE IN CONDUIT AS PER TRENCH CROSS SECTIONS A–A, F–F, I–I, K–K, L–L & N–N.
A–24	40.5	4x16 CU1+E	INSTALL CABLE IN CONDUIT AS PER TRENCH CROSS SECTIONS A–A, D–D. F–F & G–G.
24–25	31.0	4x16 CU1+E	INSTALL CABLE IN CONDUIT AS PER TRENCH CROSS SECTIONS D–D & G–G.
25–26	35.0	4x16 CU1+E	INSTALL CABLE IN CONDUIT AS PER TRENCH CROSS SECTIONS D–D & G–G.
26–27	21.0	4x16 CU1+E	INSTALL CABLE IN CONDUIT AS PER TRENCH CROSS SECTIONS D–D, G–G & J–J.
27–28	32.0	4x16 CU1+E	INSTALL CABLE IN CONDUIT AS PER TRENCH CROSS SECTIONS D–D & G–G.
28–29	32.0	4x16 CU1+E	INSTALL CABLE IN CONDUIT AS PER TRENCH CROSS SECTIONS D–D & G–G.
29–30, 30–31, 33–34	33.0	4x16 CU1+E	INSTALL CABLE IN CONDUIT AS PER TRENCH CROSS SECTIONS D–D & G–G.
31–32	27.5	4x16 CU1+E	INSTALL CABLE IN CONDUIT AS PER TRENCH CROSS SECTIONS D–D, G–G & J–J.
32–33	22.0	4x16 CU1+E	INSTALL CABLE IN CONDUIT AS PER TRENCH CROSS SECTIONS D–D, G–G & J–J.
34–23	41.0	4x16 CU1+E	INSTALL CABLE IN CONDUIT AS PER TRENCH CROSS SECTIONS D–D & G–G.
23–22	27.0	4x16 CU1+E	INSTALL CABLE IN CONDUIT AS PER TRENCH CROSS SECTIONS D–D & G–G.
22–21	35.0	4x16 CU1+E	INSTALL CABLE IN CONDUIT AS PER TRENCH CROSS SECTIONS D–D, G–G & H–H.
A	–	–	TERMINATE LV CABLES AT MAIN SWITCH BOARD AT POINT 'A'.
1–34	–	–	TERMINATE LV CABLES AT POLES 1 THROUGH TO 34.

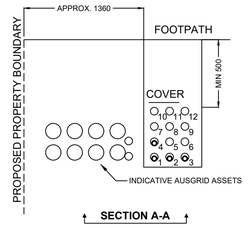

SECTION A-A

1-4: NEW 63mm PVC CONDUIT WITH 4x16 CU1+E LV CABLE
5-12 : NEW 63mm PVC CONDUIT - SPARE

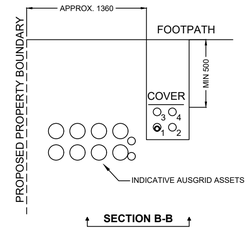

SECTION B-B

1: NEW 63mm PVC CONDUIT WITH 4x16 CU1+E LV CABLE
2-3: NEW 63mm PVC CONDUIT - SPARE

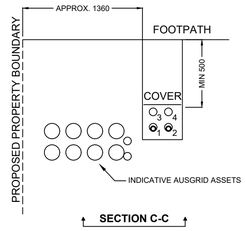

SECTION C-C

1-2: NEW 63mm PVC CONDUIT WITH 4x16 CU1+E LV CABLE
3-3: NEW 63mm PVC CONDUIT - SPARE

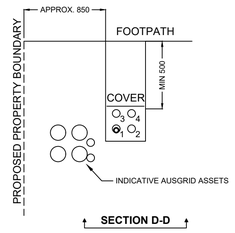

SECTION D-D

1: NEW 63mm PVC CONDUIT WITH 4x16 CU1+E LV CABLE
2-4: NEW 63mm PVC CONDUIT - SPARE

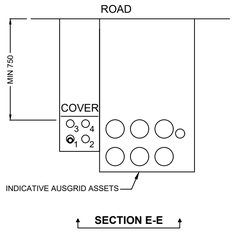

SECTION E-E

1: NEW 63mm PVC CONDUIT WITH 4x16 CU1+E LV CABLE
2-4: NEW 63mm PVC CONDUIT - SPARE

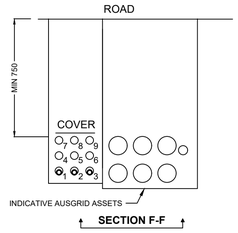

SECTION F-F

1-3: NEW 63mm PVC CONDUIT WITH 4x16 CU1+E LV CABLE
4-9: NEW 63mm PVC CONDUIT - SPARE

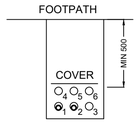

SECTION G-G

1-2: NEW 63mm PVC CONDUIT WITH 4x16 CU1+E LV CABLE
3: NEW 50mm PVC CONDUIT - SPARE
4-5: NEW 63mm PVC CONDUIT - SPARE
6: NEW 50mM PVC CONDUIT - SPARE

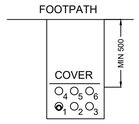

SECTION H-H

1: NEW 63mm PVC CONDUIT WITH 4x16 CU1+E LV CABLE
2: NEW 63mm PVC CONDUIT - SPARE
3: NEW 50mm PVC CONDUIT - SPARE
4-5: NEW 63mm PVC CONDUIT - SPARE
6: NEW 50mM PVC CONDUIT - SPARE

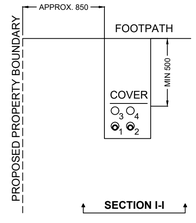

SECTION I-I

1-2: NEW 63mm PVC CONDUIT WITH 4x16 CU1+E LV CABLE
3-4: NEW 63mm PVC CONDUIT - SPARE

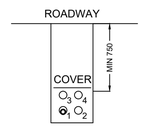

SECTION J-J

1: NEW 63mm PVC CONDUIT WITH 4x16 CU1+E LV CABLE
2-4: NEW 63mm PVC CONDUIT - SPARE

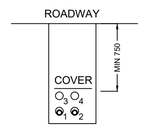

SECTION K-K

1-2: NEW 63mm PVC CONDUIT WITH 4x16 CU1+E LV CABLE
3-4: NEW 63mm PVC CONDUIT - SPARE

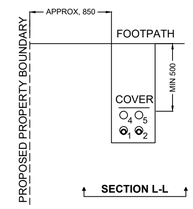

SECTION L-L

1-2: NEW 63mm PVC CONDUIT WITH 4x16 CU1+E LV CABLE
3-3: NEW 63mm PVC CONDUIT - SPARE

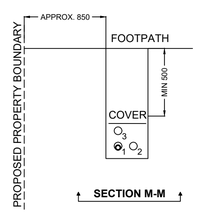

SECTION M-M

1: NEW 63mm PVC CONDUIT WITH 4x16 CU1+E LV CABLE
2-3: NEW 63mm PVC CONDUIT - SPARE

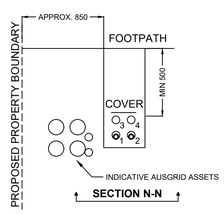

SECTION N-N

1-2: NEW 63mm PVC CONDUIT WITH 4x16 CU1+E LV CABLE
3-4: NEW 63mm PVC CONDUIT - SPARE

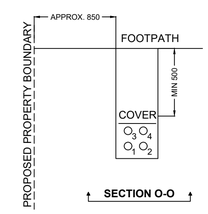

SECTION O-O

1-4: NEW 63mm PVC CONDUIT - SPARE

No.	Description	Drn	Ckd	Date
A	FOR APPROVAL	EW	DT	07.04.20
B	LEGEND AND SECTIONS UPDATED	EW	DT	29.04.20
C	LEGEND, CONSTRUCTION TABLE & SECTIONS UPDATED	EW	DT	19.06.20
D	CONSTRUCTION TABLE & SECTIONS UPDATED	EW	DT	20.05.21

No.	Description	Drn	Ckd	Date

CLIENT: FRASERS PROPERTY

ELECTRICAL CONSULTING ENGINEERS
Shelmerdines Consulting Engineers
ABN 40 003 331 879
55 Hume Street
Crows Nest NSW 2065
Telephone: (02) 9436 3021
Email: mail@shelmerdines.com.au
Web: www.shelmerdines.com.au

PROJECT
IVANHOE ESTATE
MACQUARIE PARK
DETAILED LIGHTING DESIGN
FOR CITY OF RYDE COUNCIL

DRAWING
ELECTRICAL SERVICES
LEGEND, WORKS SCHDULE AND TRENCH SECTIONS

DATE	SCALE
FEB 2018	NTS @ A1
DRAWN: EW	CHECKED: DT
DRAWING NUMBER: 6820-ES-302	ISSUE NUMBER: D

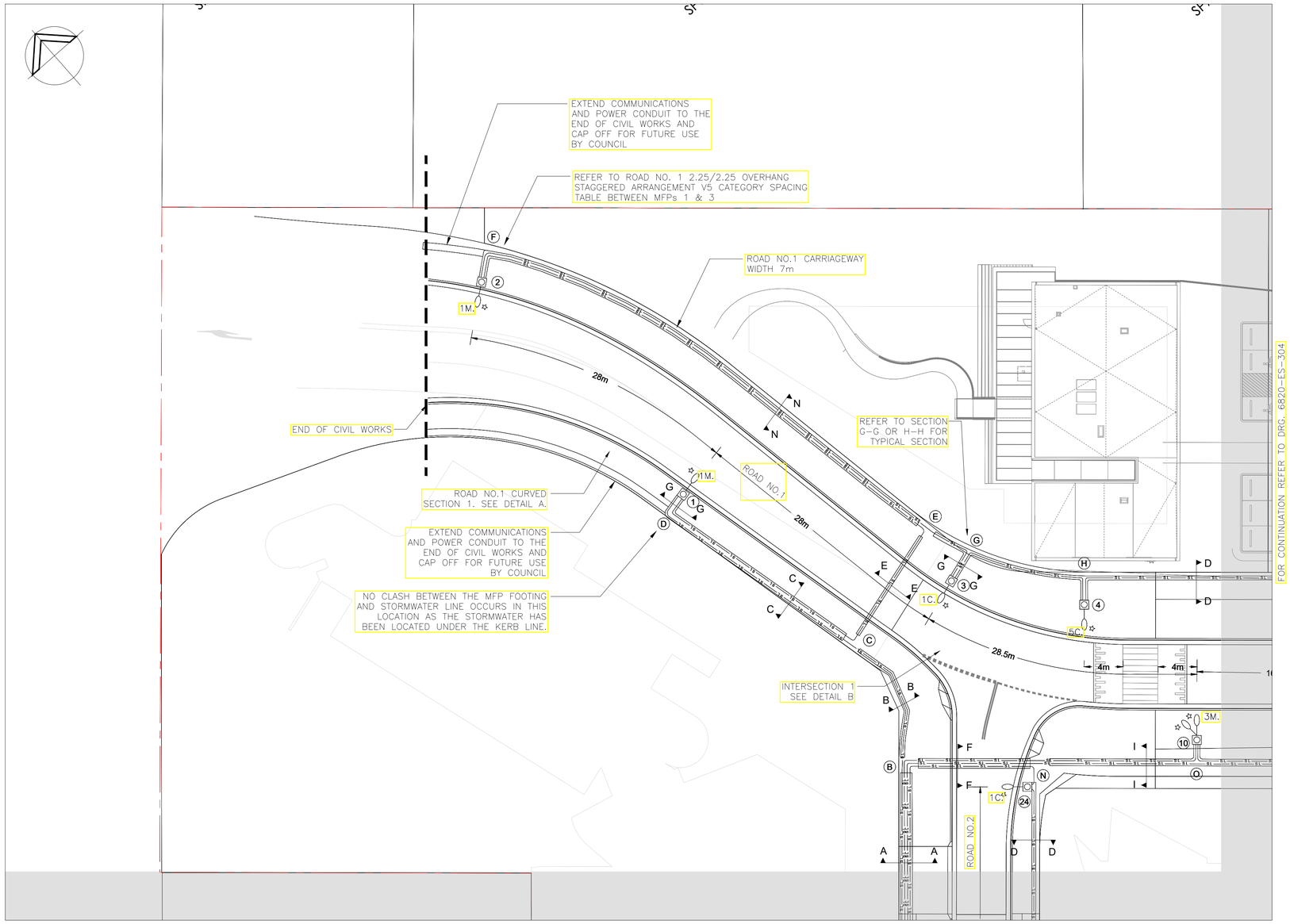

SITE PLAN 1
1:250

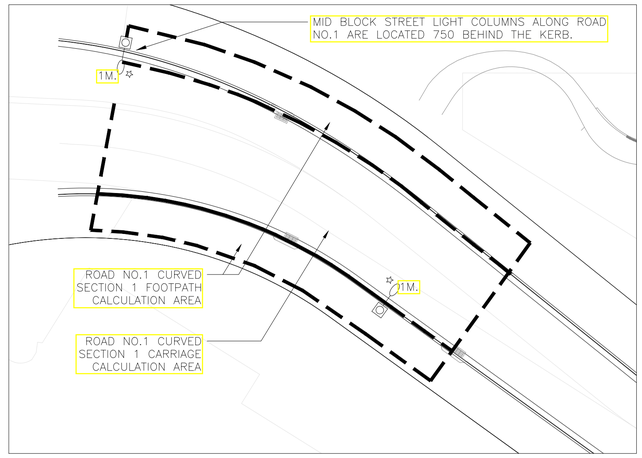

DETAIL A
1:250

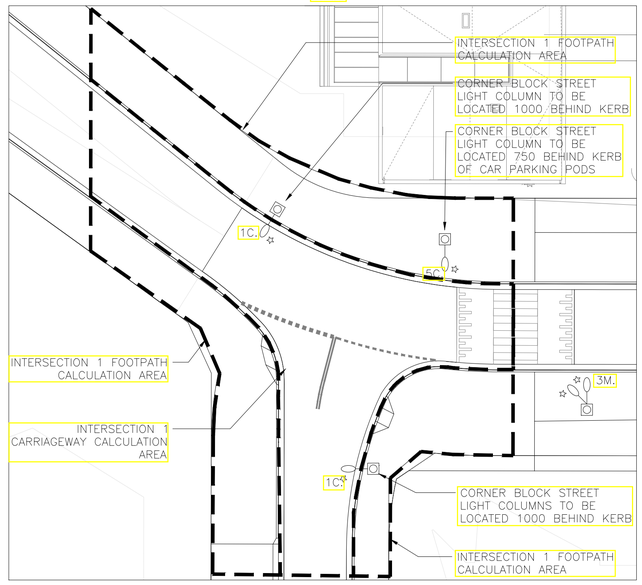

DETAIL B
1:250

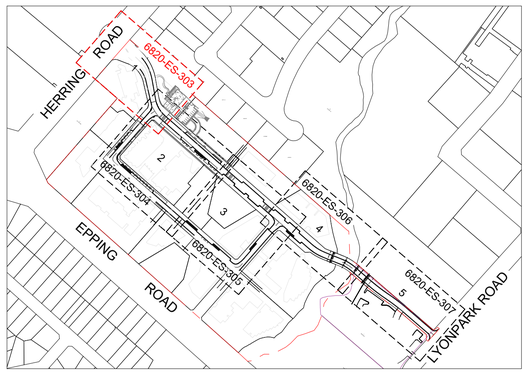

KEY PLAN
NTS

CITY OF RYDE
APPROVED FOR CONSTRUCTION
LDA.....
Signed.....
Date.....04 JUN 2021.....
Subject to the Conditions of Development Consent

No.	Description	Drn	Ckd	Date	No.	Description	Drn	Ckd	Date
A	FOR APPROVAL	EW	DT	07.04.20					
B	DIMENSION AND DETAILS ADDED	EW	DT	04.05.20					
C	SL CIRCUIT MODIFIED AND MINOR EDITS TO NOTES AND REF POINTS	EW	DT	19.06.20					
D	OPEN POINTS ADDED & SL RELOC. CALCULATION AREA UPDATED AND BACKGROUND UPDATED.	EW	DT	20.05.21					

CLIENT:
FRASERS PROPERTY

ELECTRICAL CONSULTING ENGINEERS
Shelmerdines Consulting Engineers
ABN 40 003 331 879
55 Hume Street
Crows Nest NSW 2065
Telephone: (02) 9436 3021
Email: mail@shelmerdines.com.au
Web: www.shelmerdines.com.au

PROJECT
IVANHOE ESTATE
MACQUARIE PARK
DETAILED LIGHTING DESIGN
FOR CITY OF RYDE COUNCIL

DRAWING
ELECTRICAL SERVICES
SITE PLAN 1

DATE	SCALE
FEB 2018	AS SHOWN @ A1
DRAWN: EW	CHECKED: DT
DRAWING NUMBER: 6820-ES-303	ISSUE NUMBER: D

FOR CONTINUATION REFER TO DRG. 6820-ES-303

FOR CONTINUATION REFER TO DRG. 6820-ES-303

TEMPORARY DRIVEWAY TO SALES SUITE

MID BLOCK STREET LIGHT COLUMNS ALONG ROAD NO.1 ARE LOCATED 750 BEHIND INDENTED CAR PARKING KERB LINE ON BOTH SIDES OF THE CARRIAGEWAY

ROAD NO.1

16m | 37m | 37m | 26.2m

4m | 4m | 4m

28.5m

ROAD NO.1 CARRIAGEWAY WIDTH 7m

REFER TO ROAD NO. 1 -0.25/-0.25 OVERHANG STAGGERED ARRANGEMENT V5 CATEGORY SPACING TABLE BETWEEN MFPs 10 TO 12

NEW CITY OF RYDE COUNCIL PUBLIC LIGHTING MAIN SWITCHBOARD.

NEW CITY OF RYDE COUNCIL STYLE LIGHTING SWITCHBOARD TO BE LOCATED ADJACENT TO CITY OF RYDE COUNCIL PUBLIC LIGHTING MAIN SWITCHBOARD WITH 100mm SEPARATION. SPARE 1x 63mm CONDUIT TO BE INSTALLED BETWEEN SWITCHBOARDS.

SUPPLY AUTHORITY PILLAR TO BE COORDINATED IN CONJUNCTION WITH THIS DESIGN AND ESTABLISHED UNDER AUSGRID PROJECT AN21290.

ROAD NO.2

30m | 31m | 32m | 32m

33.5m

ROAD NO.2 COMPLIES WITH V5 IN THE CARRIAGEWAY AND P2 IN THE FOOTPATH.

ROAD NO.2 CARRIAGEWAY WIDTH 6m

ROAD NO.2 CORNER 1

MID BLOCK STREET LIGHT COLUMNS ALONG ROAD NO.2 ARE 750 BEHIND THE KERB

LIGHTING DESIGN STAGE 1

LIGHTING DESIGN STAGE 2

FOR CONTINUATION REFER TO DRG. 6820-ES-305

SITE PLAN 2

1:250

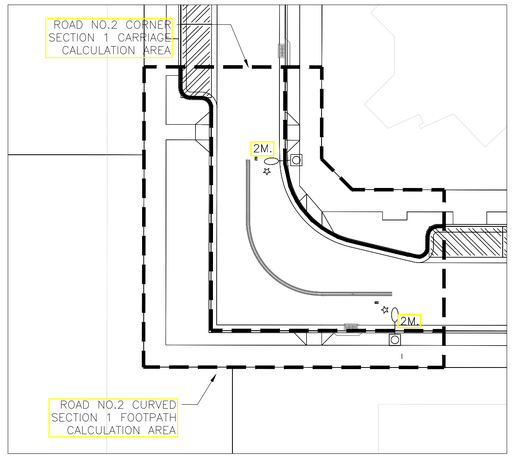

DETAIL C

1:250

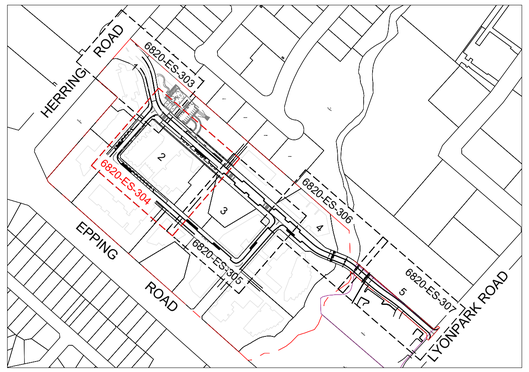

KEY PLAN

NTS

CITY OF RYDE
APPROVED FOR CONSTRUCTION
LDA.....
Signed.....
Date.....04 JUN 2021.....
Subject to the Conditions of Development Consent

No.	Description	Drn	Ckd	Date
A	FOR APPROVAL	EW	DT	07.04.20
B	DIMENSION AND DETAILS ADDED	EW	DT	13.05.20
C	STREET LIGHTING CIRCUITS MOD MODIFIED, REF MODIFIED AND DETAILS ADDED	EW	DT	19.06.20
D	OPEN POINTS ADDED & SL RELOC, PEDESTRIAN CROSSING RELOCATED, SITE PLAN UPDATED	EW	DT	20.05.21

No.	Description	Drn	Ckd	Date

CLIENT: FRASERS PROPERTY

ELECTRICAL CONSULTING ENGINEERS
Shelmerdines Consulting Engineers
ABN 40 003 331 879
55 Hume Street
Crows Nest NSW 2065
Telephone: (02) 9436 3021
Email: mail@shelmerdines.com.au
Web: www.shelmerdines.com.au

PROJECT
IVANHOE ESTATE
MACQUARIE PARK
DETAILED LIGHTING DESIGN
FOR CITY OF RYDE COUNCIL

DRAWING
ELECTRICAL SERVICES
SITE PLAN 2

DATE	SCALE
FEB 2018	AS SHOWN @ A1
DRAWN: EW	CHECKED: DT
DRAWING NUMBER: 6820-ES-304	ISSUE NUMBER: D

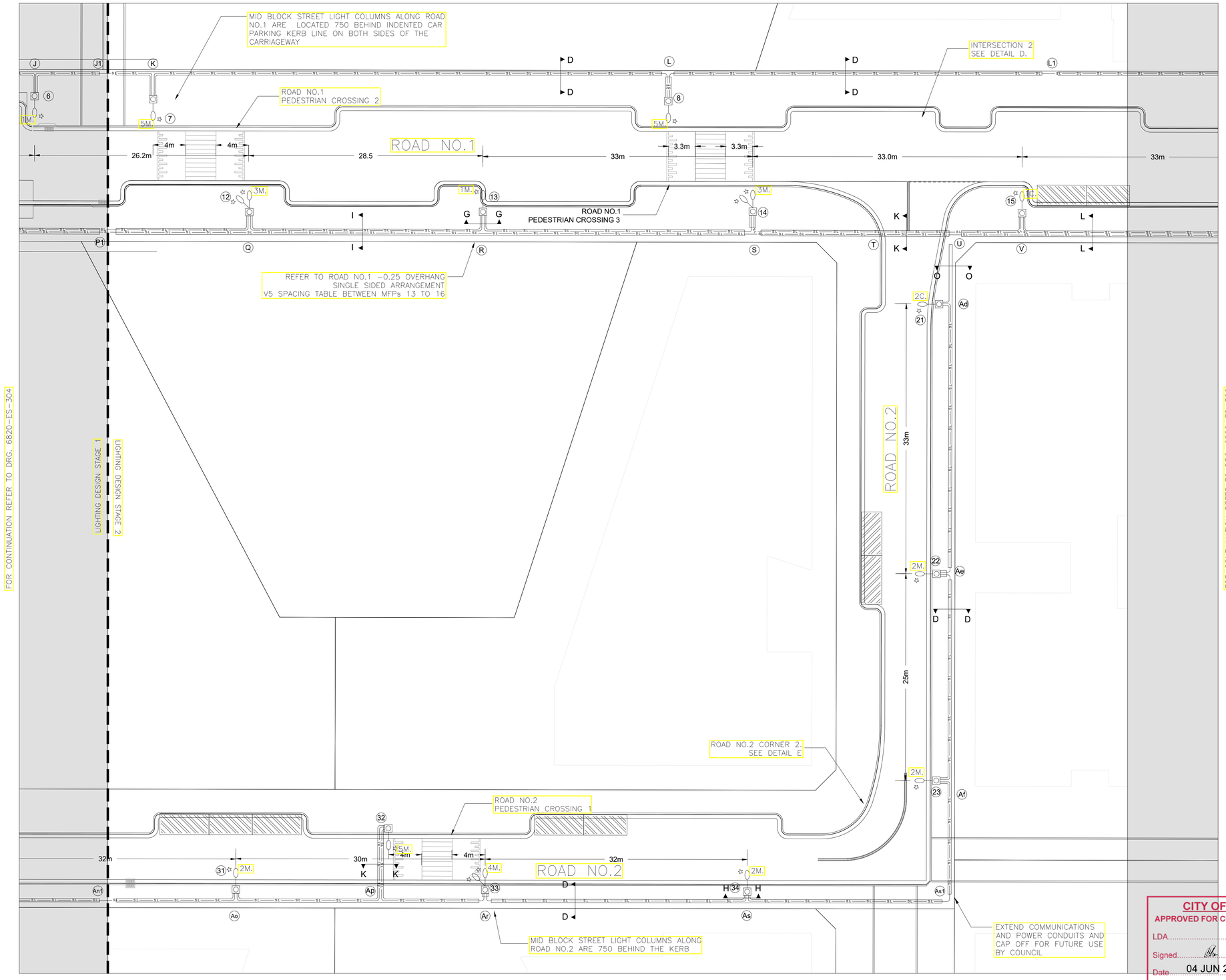

SITE PLAN 3
1:250

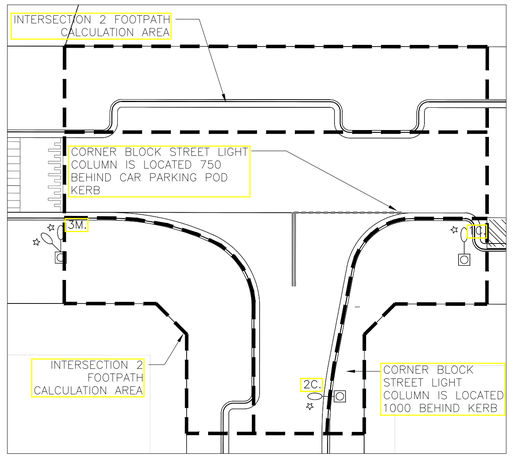

DETAIL D
1:250

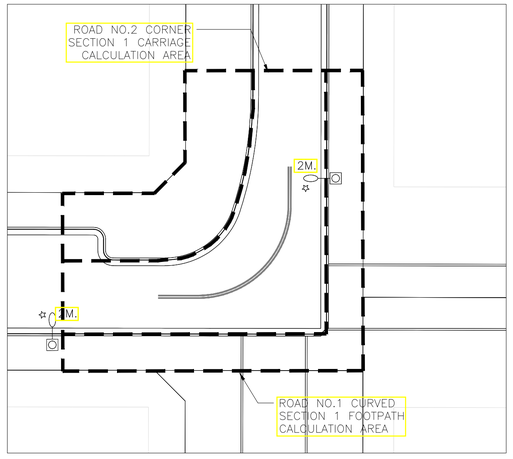

DETAIL E
1:250

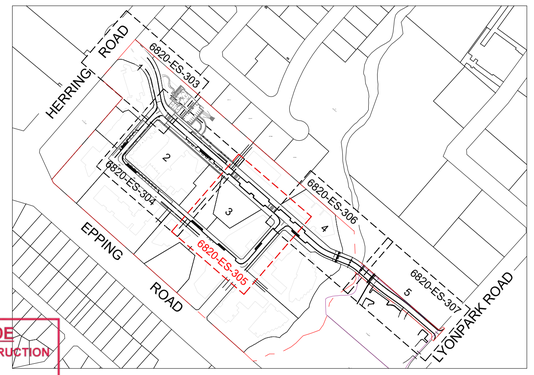

KEY PLAN
NTS

CITY OF RYDE
APPROVED FOR CONSTRUCTION
LDA.....
Signed.....
Date 04 JUN 2021
Subject to the Conditions of Development Consent

No.	Description	Drn	Ckd	Date	No.	Description	Drn	Ckd	Date
A	FOR APPROVAL	EW	DT	07.04.20					
B	DIMENSION AND DETAILS ADDED	EW	DT	13.05.20					
C	STREET LIGHTING CONDUITS AND AND REF POINTS MODIFIED	EW	DT	19.06.20					
D	OPEN POINTS ADDED, SL RELOC PEDX RELOCATED, CALC AREA AMENDED AND SITE PLAN UPDATED	EW	DT	20.05.21					

CLIENT:
FRASERS PROPERTY

ELECTRICAL CONSULTING ENGINEERS
Shelmerdines Consulting Engineers
ABN 40 003 331 879
55 Hume Street
Crows Nest NSW 2065
Telephone: (02) 9436 3021
Email: mail@shelmerdines.com.au
Web: www.shelmerdines.com.au

PROJECT
IVANHOE ESTATE
MACQUARIE PARK
DETAILED LIGHTING DESIGN
FOR CITY OF RYDE COUNCIL

DRAWING
ELECTRICAL SERVICES
SITE PLAN 3

DATE	SCALE
FEB 2018	AS SHOWN @ A1
DRAWN: EW	CHECKED: DT
DRAWING NUMBER: 6820-ES-305	ISSUE NUMBER: D

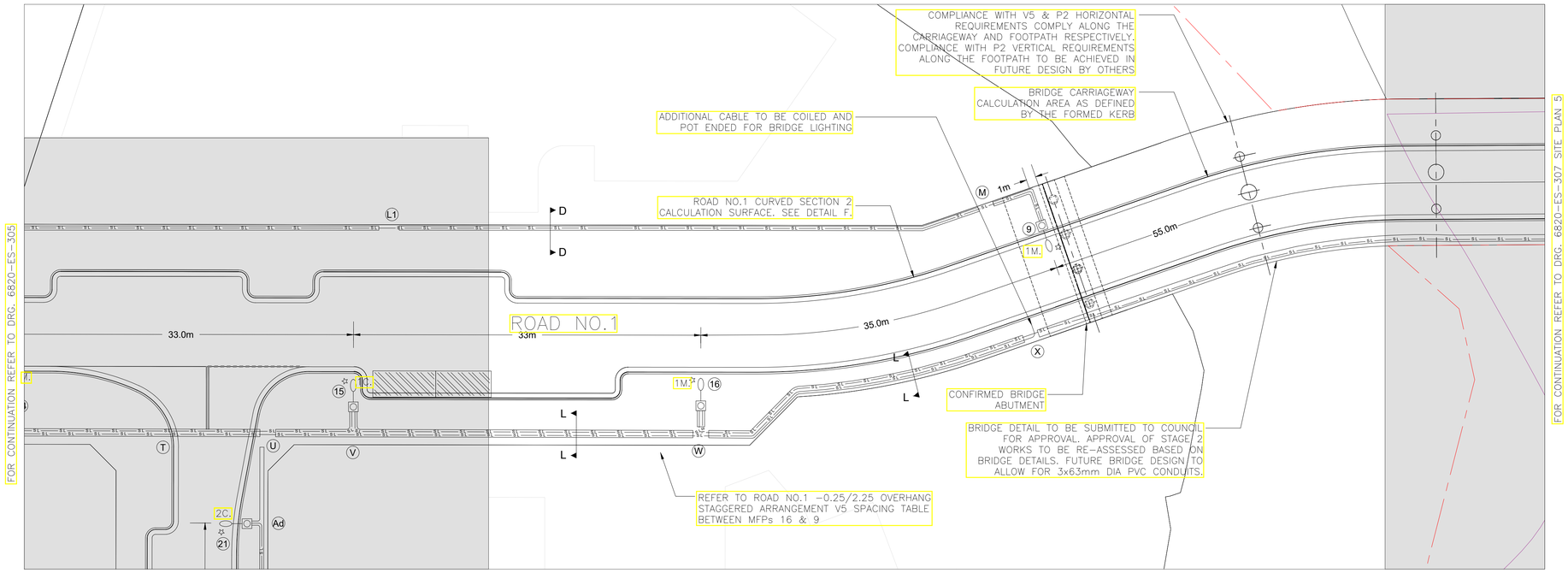

SITE PLAN 4

1:250

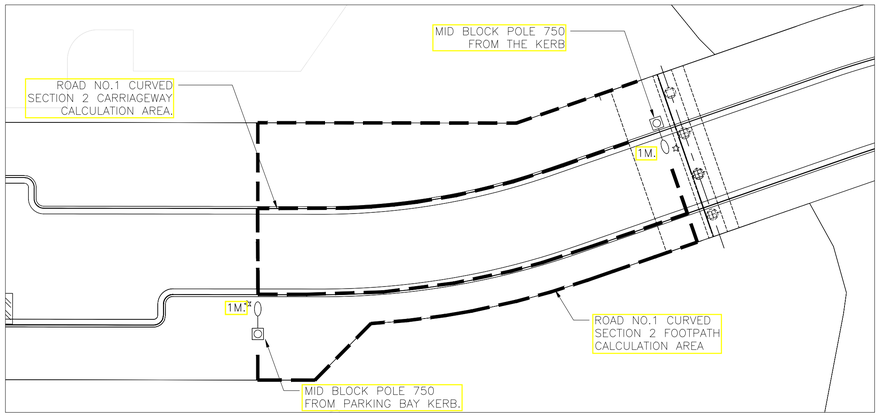

DETAIL F

1:250

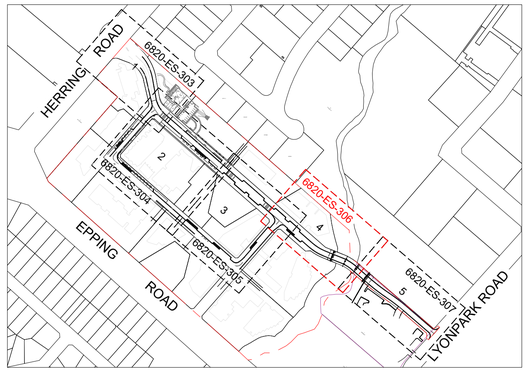

KEY PLAN

NTS

CITY OF RYDE
APPROVED FOR CONSTRUCTION
LDA.....
Signed.....
Date 04 JUN 2021
Subject to the Conditions of Development Consent

No.	Description	Drn	Ckd	Date	No.	Description	Drn	Ckd	Date
A	FOR APPROVAL	EW	DT	07.04.20	E	DIMENSION ADDED	EW	DT	01.06.21
B	DIMENSION AND DETAILS ADDED	EW	DT	04.05.20					
C	BRIDGE DETAILS, REF POINTS AND MFP LOCATION MODIFIED	EW	DT	19.06.20					
D	OPEN POINTS ADDED, SL RELOC, BRIDGE ABUTMENT ADDED AND SITE PLAN UPDATED.	EW	DT	20.05.21					

CLIENT: FRASERS PROPERTY

ELECTRICAL CONSULTING ENGINEERS
Shelmerdines Consulting Engineers
ABN 40 003 331 879
55 Hume Street
Crows Nest NSW 2065
Telephone: (02) 9436 3021
Email: mail@shelmerdines.com.au
Web: www.shelmerdines.com.au

PROJECT
IVANHOE ESTATE
MACQUARIE PARK
DETAILED LIGHTING DESIGN
FOR CITY OF RYDE COUNCIL

DRAWING
ELECTRICAL SERVICES
SITE PLAN 5

DATE	SCALE
OCT 2019	AS SHOWN @ A1
DRAWN: EW	CHECKED: DT
DRAWING NUMBER: 6820-ES-306	ISSUE NUMBER: E

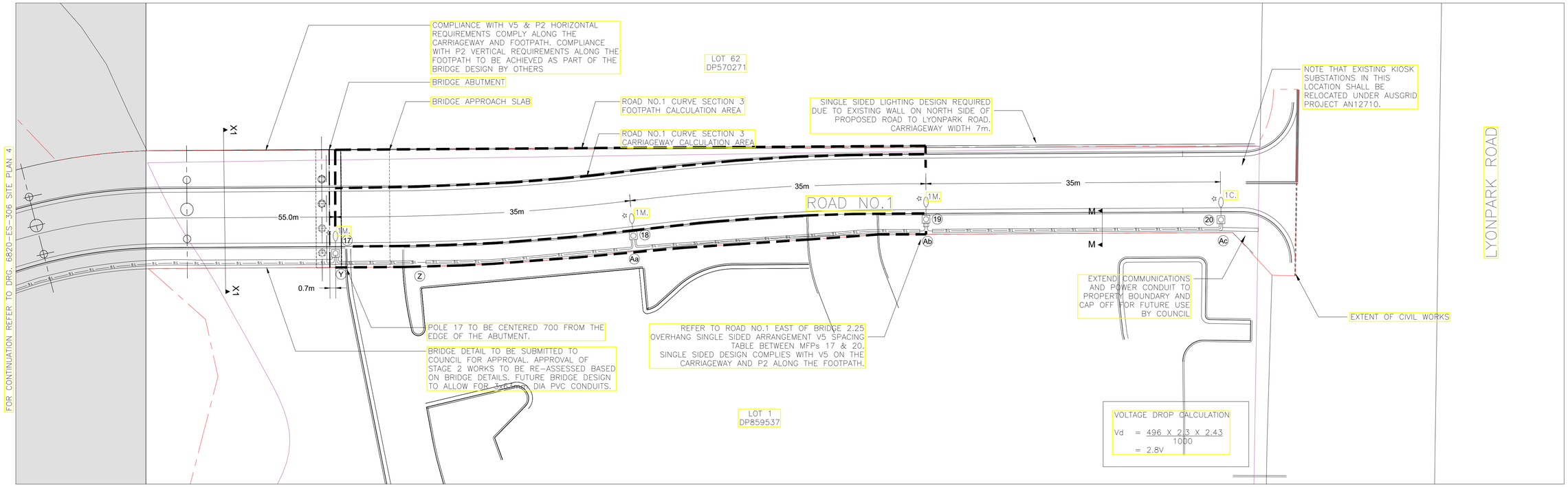

SITE PLAN 5

1:250

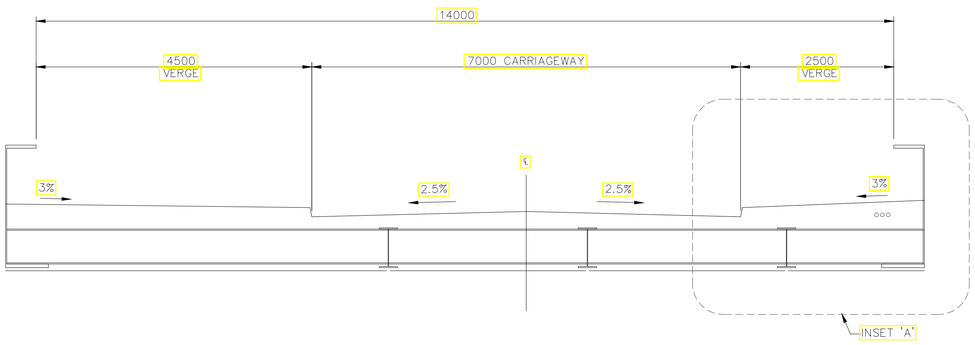

BRIDGE SECTION X1–X1

1:50

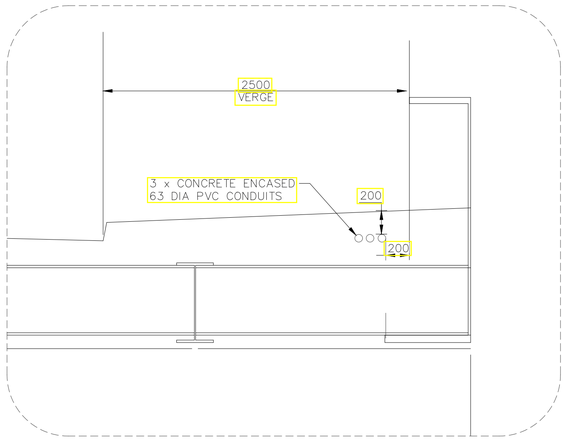

INSET A

1:25

NOTES:
1 – CONDUITS PROPOSED AS PART OF THIS LIGHTING DESIGN ARE NOT TO BE USED FOR BRIDGE LIGHTING
2 – DUCTS MUST BE MARKED WITH A WARNING TAG (METAL/BRASS) TO ALERT PEOPLE TO THE PRESENSE OF UG CABLES
3 – MINIMUM 75mm CONCRETE ENCASEMENT REQUIRED OVER CONDUITS

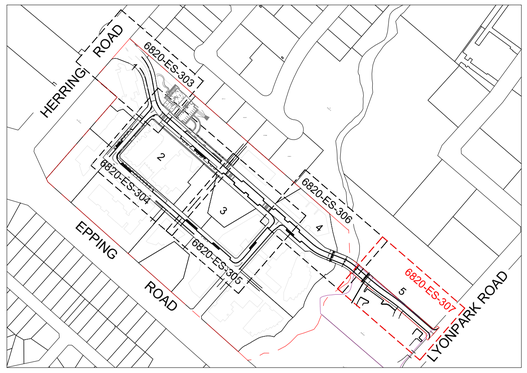

KEY PLAN

NTS

CITY OF RYDE
APPROVED FOR CONSTRUCTION
LDA.....
Signed.....
Date.....04 JUN 2021
Subject to the Conditions of Development Consent

No.	Description	Drn	Ckd	Date	No.	Description	Drn	Ckd	Date
A	FOR APPROVAL	EW	DT	07.04.20	E	DIMENSION ADDED	EW	DT	01.06.21
B	DIMENSION AND DETAILS ADDED BRIDGE SECTION ADDED	EW	DT	13.05.20					
C	BRIDGE DETAILS AMENDED AND NOTE ADDED	EW	DT	19.06.20					
D	OPEN POINTS ADDED, SL RELOC & BRIDGE ABUTMENT ADDED	EW	DT	20.05.21					

CLIENT:
FRASERS PROPERTY

ELECTRICAL CONSULTING ENGINEERS
Shelmerdines Consulting Engineers
ABN 40 003 331 879
55 Hume Street
Crows Nest NSW 2065
Telephone: (02) 9436 3021
Email: mail@shelmerdines.com.au
Web: www.shelmerdines.com.au

PROJECT
IVANHOE ESTATE
MACQUARIE PARK
DETAILED LIGHTING DESIGN
FOR CITY OF RYDE COUNCIL

DRAWING
ELECTRICAL SERVICES
SITE PLAN 5
AND BRIDGE DETAILS

DATE	SCALE
FEB 2018	AS SHOWN @ A1
DRAWN: EW	CHECKED: DT
DRAWING NUMBER: 6820-ES-307	ISSUE NUMBER: E

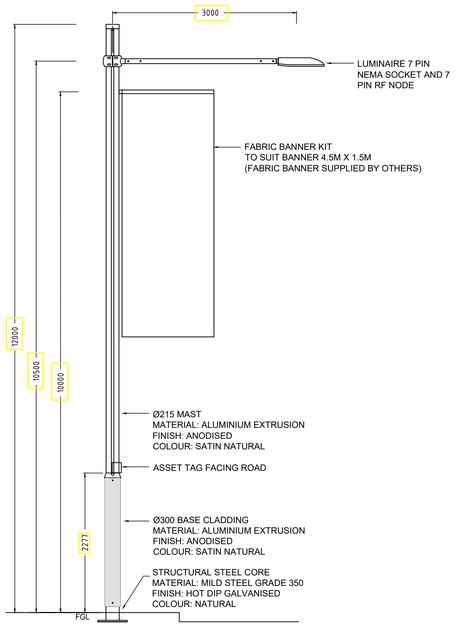

12.0M MULTI-FUNCTION POLE
FOR MID-BLOCK INSTALLATION
P/N: MFP-048
FOR CORNER BLOCK INSTALLATION
SUITABLE FOR 5.5M TRAFFIC ARM
P/N: MFP-015

MULTIFUNCTION POLE – TYPE 1M AND TYPE 1C

NOTE: CLEARANCE FROM FACE OF KERB TO FACE OF POLE TO BE 750mm FOR MID–BLOCK POLES AND 1000mm FOR CORNER BLOCK POLES
(POLES SUPPLIED BY MFP SYSTEMS)
CONTACT: ADAM SMITH 0429 814 471

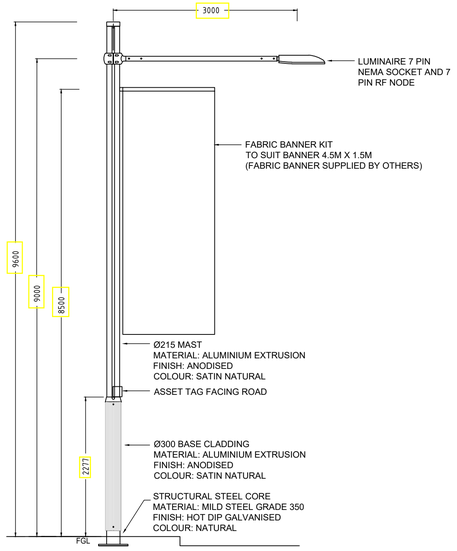

9.6M MULTI-FUNCTION POLE
FOR MID-BLOCK INSTALLATION
P/N: MFP-016
FOR CORNER BLOCK INSTALLATION
SUITABLE FOR 5.5M TRAFFIC ARM
P/N: MFP-022

MULTIFUNCTION POLE – TYPE 2M AND TYPE 2C

NOTE: CLEARANCE FROM FACE OF KERB TO FACE OF POLE TO BE 750mm FOR MID–BLOCK POLES AND 1000mm FOR CORNER BLOCK POLES
(POLES SUPPLIED BY MFP SYSTEMS)
CONTACT: ADAM SMITH 0429 814 471

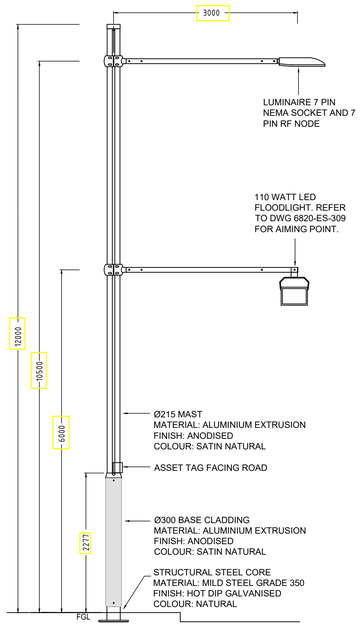

12.0M MULTI-FUNCTION POLE
FOR MID-BLOCK INSTALLATION
P/N: MFP-048

MULTIFUNCTION POLE – TYPE 3M

NOTE: CLEARANCE FROM FACE OF KERB TO FACE OF POLE TO BE 750mm FOR MID–BLOCK POLES
(POLES SUPPLIED BY MFP SYSTEMS)
CONTACT: ADAM SMITH 0429 814 471

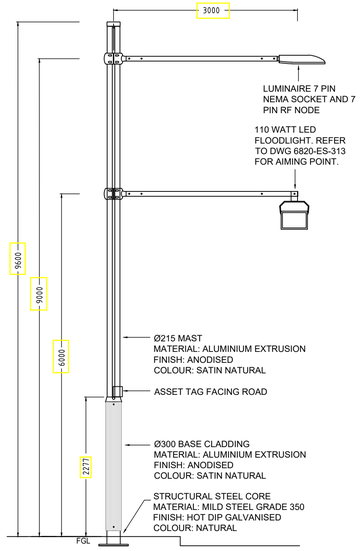

9.6M MULTI-FUNCTION POLE
FOR MID-BLOCK INSTALLATION
P/N: MFP-016

MULTIFUNCTION POLE – TYPE 4M

NOTE: CLEARANCE FROM FACE OF KERB TO FACE OF POLE TO BE 750mm FOR MID–BLOCK POLES
(POLES SUPPLIED BY MFP SYSTEMS)
CONTACT: ADAM SMITH 0429 814 471

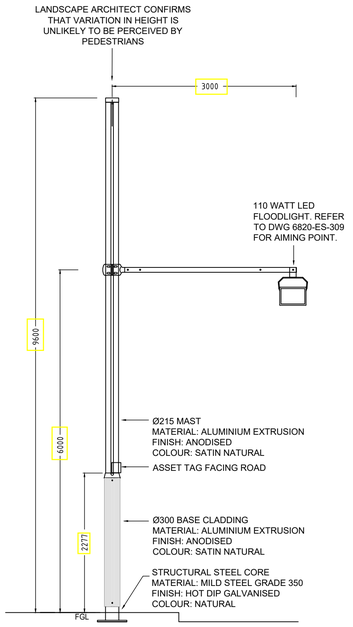

9.6M MULTI-FUNCTION POLE
FOR MID-BLOCK INSTALLATION
P/N: MFP-016
FOR CORNER BLOCK INSTALLATION
SUITABLE FOR 5.5M TRAFFIC ARM
P/N: MFP-022

MULTIFUNCTION POLE – TYPE 5M AND TYPE 5C

NOTE: CLEARANCE FROM FACE OF KERB TO FACE OF POLE TO BE 750mm FOR MID–BLOCK POLES AND 1000mm FOR CORNER BLOCK POLES
(POLES SUPPLIED BY MFP SYSTEMS)
CONTACT: ADAM SMITH 0429 814 471

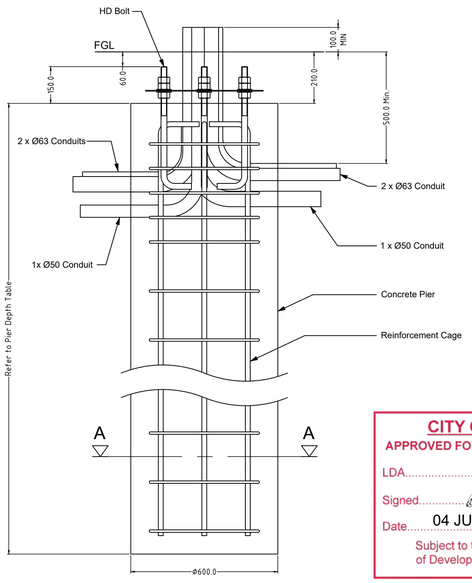

TYPICAL FOOTING ELEVATION & DETAIL

NOTE:– FINAL FOOTING DETAILS & ARRANGEMENT TO BE SPECIFIED BY STRUCTURAL ENGINEER TO SUIT LOCAL ENVIRONMENTAL CONDITIONS.

CITY OF RYDE
APPROVED FOR CONSTRUCTION
LDA.....
Signed.....
Date..... 04 JUN 2021
Subject to the Conditions of Development Consent

NOTE:
Ryde Council Pole Set Back is 750mm from Front of Pole to Front of Kerb.

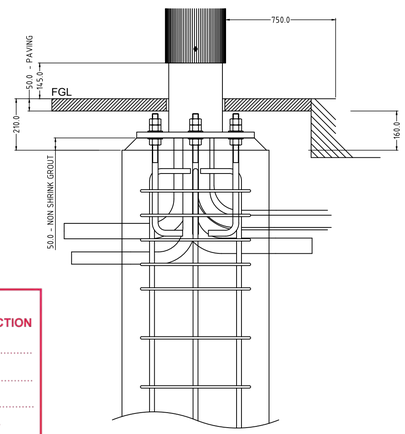

FRONT VIEW

TYPICAL INSTALLATION DETAIL MULTI–FUNCTION POLE

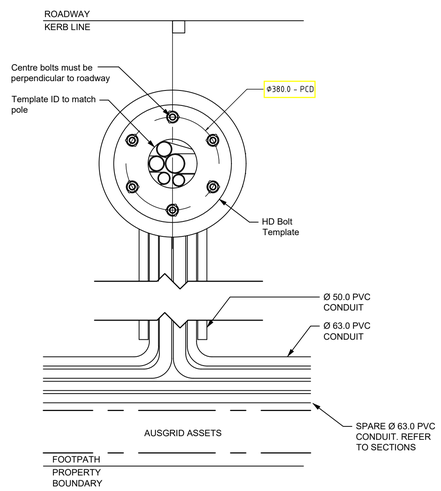

TYPICAL CONDUIT ARRANGEMENT PLAN VIEW

ULIMATE BASE REACTIONS					PIER DEPTH TABLE
PART No.	POLE TYPE	Axial - P (kN)	Shear - V (kN)	Torque - T (kNm)	PIER DEPTH
MFP-016	M2B - 9.6m	3	12	3	2.6m
MFP-022	M2A - 9.6m	10	15	27	3.3m
MFP-015	M2A - 12.0m	10	15	27	3.3m
MFP-007	M2A2 - 12.0m	5	9	2	2.6m
MFP-009 MFP-050	M2B - 6.5m	2	7	3	2.0m
MFP-010 MFP-011	M2B - 5.0m	2	6	1	1.8m
MFP-014 MFP-049	M2B - 8.0m	3	7	3	2.5m
MFP-020	M2B3 - 11.0m	3	13	7	3.0m
MFP-048	M2A2 - 12.0m	5	8	7	2.6m

NOTES GENERAL
1. Minimum clearance to existing Gas Mains to be 300mm. Minimum clearance to existing Water Mains to be 150mm.
2. The generic foundation design shown is for reference ONLY.
3. A site specific foundation will need to be designed and certified by an engineer after a Geotechnical Survey has been completed.

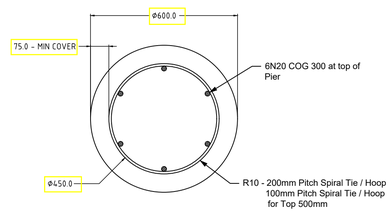

SECTION A–A

No.	Description	Drn	Ckd	Date	No.	Description	Drn	Ckd	Date
A	FOR APPROVAL	EW	DT	07.04.20					
B	POLE DETAILS UPDATED	EW	DT	30.04.20					
C	MINOR CHANGES	EW	DT	09.06.20					
D	TYPICAL FOOTING AMENDED	EW	DT	06.05.21					

CLIENT: FRASERS PROPERTY

ELECTRICAL CONSULTING ENGINEERS
Shelmerdines Consulting Engineers
ABN 40 003 331 879
55 Hume Street
Crows Nest NSW 2065
Telephone: (02) 9436 3021
Email: mail@shelmerdines.com.au
Web: www.shelmerdines.com.au

PROJECT
IVANHOE ESTATE
MACQUARIE PARK
DETAILED LIGHTING DESIGN
FOR CITY OF RYDE COUNCIL

DRAWING
ELECTRICAL SERVICES
COLUMN AND FOUNDATION DETAILS

DATE	SCALE
FEB 2018	AS SHOWN @ A1
DRAWN: EW	CHECKED: DT
DRAWING NUMBER: 6820-ES-308	ISSUE NUMBER: D

NOTE:
SWITCHBOARDS TO SIT ON A SINGLE CONCRETE PLINTH SEPARATED BY 100mm. SPARE 63mM CONDUIT TO BE PROVIDED BETWEEN SWITCHBOARDS

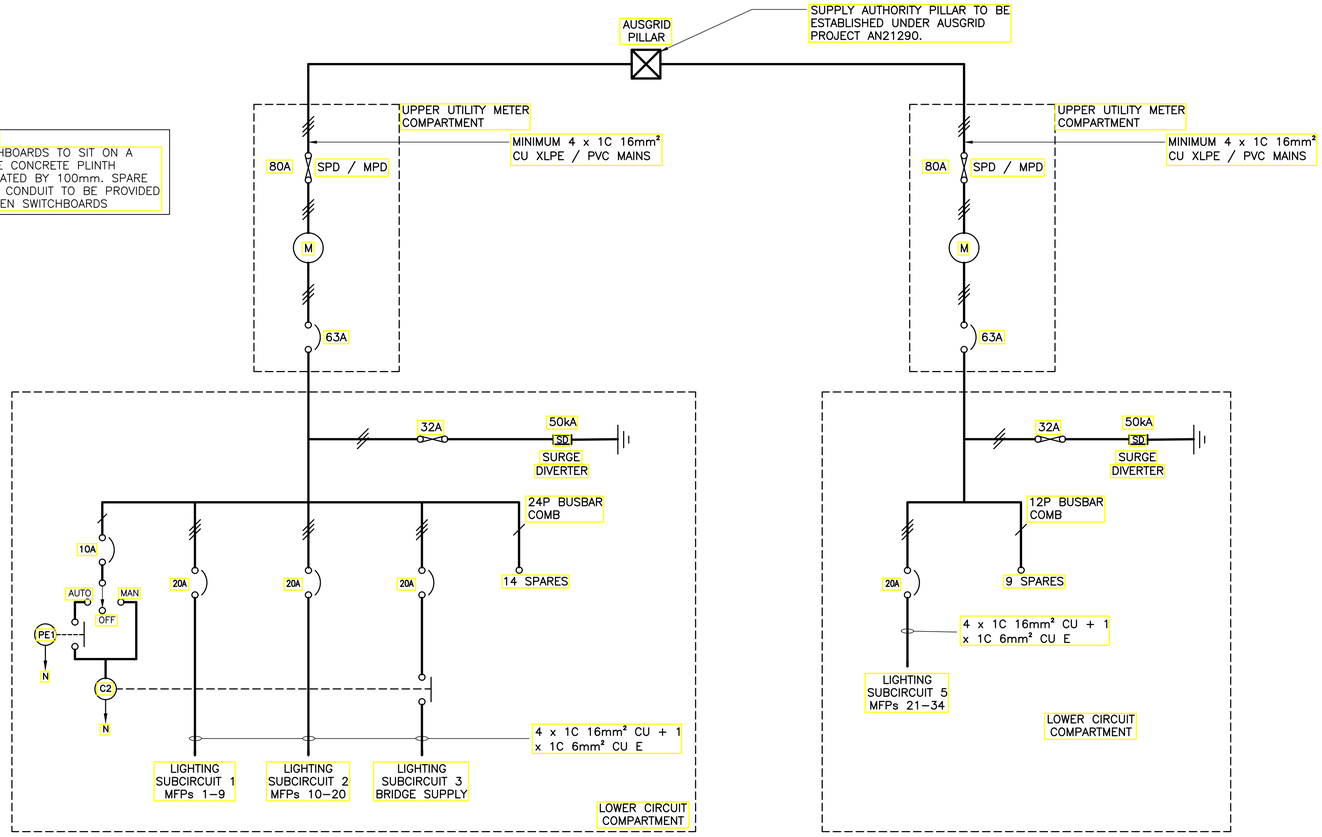

CITY OF RYDE COUNCIL MAIN SWITCHBOARD SINGLE LINE DIAGRAM

NOT TO SCALE

'CITY OF RYDE' STYLE ROAD NO.2 SWITCHBOARD SINGLE LINE DIAGRAM

NOT TO SCALE

LEGEND

- M — NEW ENERGY SUPPLIER WHOLE CURRENT METERING EQUIPMENT
- CABLE OR BUSBAR — No OF STROKES DENOTES No. OF PHASES
- NEW CIRCUIT BREAKER RCBO – COMPLETE WITH INTEGRAL 30mA RESIDUAL CURRENT DEVICE
- NORMALLY OPEN CONTACT
- SWITCH
- NEW FUSE WITH LOAD / LINE SIDE AND RATING
- SD — SURGE DIVERTERS

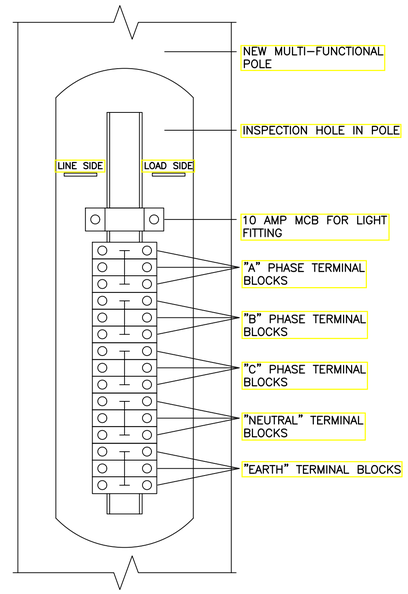

INTERNAL ELECTRICAL LAYOUT FOR MFP

NOT TO SCALE

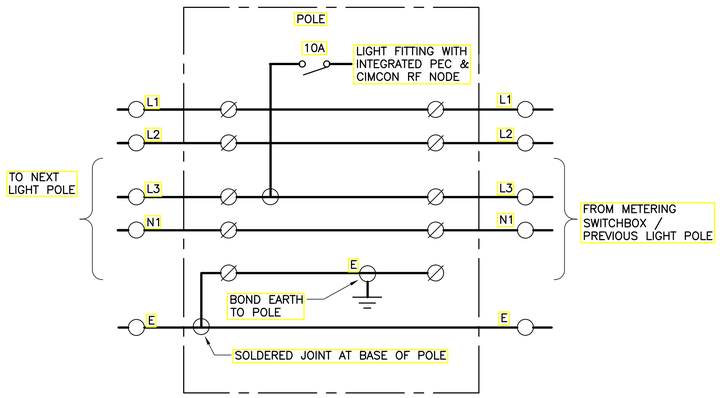

TYPICAL NEW POLE WIRING

NOT TO SCALE

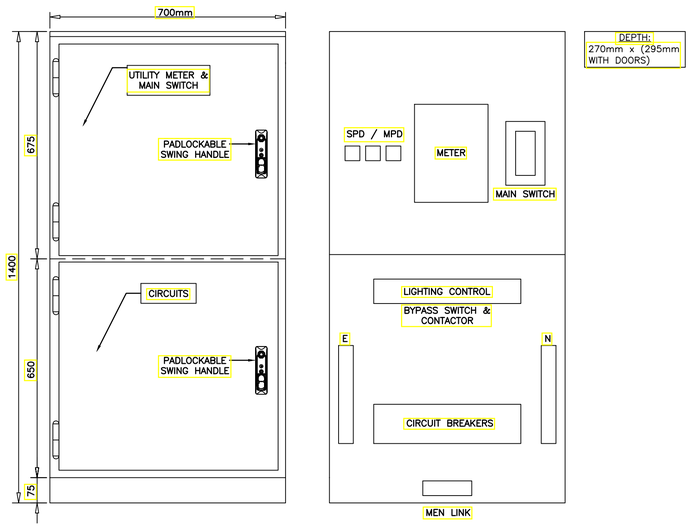

TYPICAL SWITCHBOARD DETAIL

NOT TO SCALE

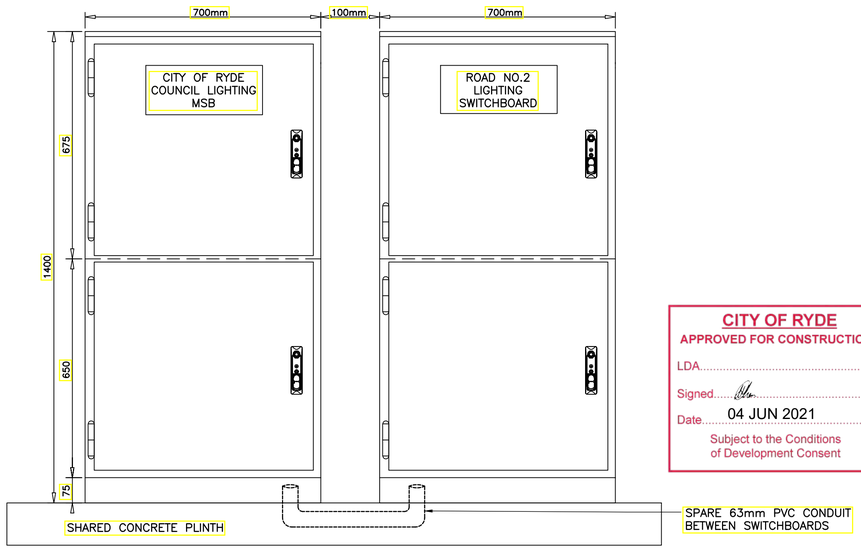

SWITCHBOARD ELEVATION DETAIL

NOT TO SCALE

CITY OF RYDE
APPROVED FOR CONSTRUCTION
LDA.....
Signed.....
Date..... 04 JUN 2021
Subject to the Conditions of Development Consent

No.	Description	Drn	Ckd	Date	No.	Description	Drn	Ckd	Date
A	FOR APPROVAL	EW	DT	07.04.20	F	NOTE CHANGED	EW	DT	14.05.21
B	CIRCUIT DIAGRAM MOVED TO SHEET 6820-ES-317. MINOR REVISIONS.	EW	DT	01.05.20					
C	SLD AND LEGEND UPDATED.	EW	DT	09.06.20					
D	SLD SUB-CIRCUITS UPDATED	EW	DT	22.06.20					
E	SECOND SWITCHBOARD ADDED PHOTOCELL ADDED FOR BRIDGE	EW	DT	12.05.21					

CLIENT: FRASERS PROPERTY

ELECTRICAL CONSULTING ENGINEERS
Shelmerdines Consulting Engineers
ABN 40 003 331 879
55 Hume Street
Crows Nest NSW 2065
Telephone: (02) 9436 3021
Email: mail@shelmerdines.com.au
Web: www.shelmerdines.com.au

PROJECT
IVANHOE ESTATE
MACQUARIE PARK
DETAILED LIGHTING DESIGN FOR CITY OF RYDE COUNCIL

DRAWING
ELECTRICAL SERVICES
SINGLE LINE DIAGRAMS, SWITCHBOARD AND WIRING DETAILS

DATE	SCALE
FEB 2018	AS SHOWN @ A1
DRAWN: EW	CHECKED: DT
DRAWING NUMBER: 6820-ES-309	ISSUE NUMBER: F

GENERAL NOTES:

1. THE ELECTRICAL CONTRACTOR IS TO VISIT THE SITE PRIOR TO PRICING TO SATISFY THEMSELVES OF THE SCOPE OF WAORKS.
2. PLANS HAVE BEEN PREPARED BASED ON SITE INVESTIGATION. DETAILED SURVEY HAS NOT BEEN UNDERTAKEN.
3. UPON COMPLETION OF WORKS, THE CONTRACTOR IS TO SUPPLY COUNCIL WITH A COPY OF THE WORKS AS EXECUTED (WAE) DRAWINGS. IN PROGRESS WAE DRAWINGS MAY ALSO BE REQUESTED FROM TIME TO TIME BY RYDE COUNCIL FOR CO–ORDINATION PURPOSES.
4. ALL REMOVED & REDUNDANT MATERIALS TO BE APPROPRIATELY DISPOSED OF BY THE CONTRACTOR.
5. WHILE NO RECORDS EXIST TO THE CONTRARY, THE CONTRACTOR SHALL ENSURE APPROPRIATE WORKPLACE SAFETY MEASURES ARE UTILISED IN REGARDS TO WORKING WITH ASBESTOS AND/OR ASBESTOS CONTAINING MATERIALS.
6. ALL WORKS IS TO BE COMPLETED IN A PROFESSIONAL AND TRADESMAN LIKE QUALITY.
7. ELECTRICAL AUTHORITY IS AUSGRID
8. ALL WORK SHALL BE CARRIED OUT IN ACCORDANCE WITH THE CURRENT REVISION OF THE BCA/NCC , AS/NZS 3000, AS/ACIF S009, NSW SERVICE AND INSTALLATION RULES, AUSTRALIAN STANDARDS.
9. THE CONTRACTOR SHALL UNDERTAKE A "DIAL BEFORE YOU DIG" SEARCH FOR EXISTING IN–GROUND SERVICES NO MORE THAN 20 BUSINESS DAYS PRIOR TO EXCAVATION ON SITE. ANY DAMAGE TO EXISTING IN–GROUND SERVICES SHALL BE THE CONTRACTOR'S RESPONSIBILITY.
10. THE EXISTING SERVICES SHOWN IN THE DRAWING PACKAGE HAVE BEEN DOCUMENTED FROM THE SUPPLIES DATA BY THE COUNCIL. SHELMERDINES CONSULTING ENGINEERS DOES NOT GUARANTEE OR TAKE RESPONSIBILITY OF THE ACCURACY OF THIS INFORMATION.
11. DESIGNER IS TO BE CONTACTED REGARDING ISSUES RAISED WITH THIS DESIGN.
12. THE DESIGN CANNOT BE USED FOR CONSTRUCTION PURPOSES UNTIL THE LOCATION OF ALL EXISTING SERVICES IS VERIFIED.
13. THE INFORMATION PROVIDED IN THIS DESIGN MUST BE CHECKED ON SITE AND THE MOST CURRENT INFORMATION ON THE CONFIGURATION OF ALL SERVICES, INCLUDING AUSGRID'S NETWORK, MUST BE VERIFIED IMMEDIATELY BEFORE CONSTRUCTION COMMENCES BY CONTACTING DIAL–BEFORE–YOU–DIG BY TELEPHONE ON 1100 OR WWW.1100.COM.AU
14. FOR DETAILS PLEASE REFER TO CITY OF RYDE DESIGN GUIDE, COUNCIL–OWNED STREET LIGHTING.
15. THE CONTRACTOR TO DISCUSS WITH THE COUNCIL'S MAINTENANCE CONTRACTOR BEFORE INSTALLATION.
16. STAGE 2 LIGHTING CANNOT BE CONSTRUCTED UNTIL PUBLIC DOMAIN CIVIL WORKS HAVE BEEN APPROVED BY THE ACCREDITED CERTIFIER.
17. FUTURE CONSULTATION WITH THE COUNCIL IS REQUIRED FOR THE RELOCATION OF STREET LIGHTING COLUMNS DUE TO ANY CHANGES TO THE CIVIL LAYOUT SHOWN IN THIS DESIGN. A REVISED DESIGN WILL BE REQUIRED.
18. BUILDER TO FACILITATE THE STAGING OF STAGE 1 AND 2 WORKS.

TRENCHING AND CABLING

1. 63mm DIAMETER CONDUITS INCLUDING A SPARE CONDUIT SHALL BE INSTALLED.
2. ADDITIONAL CONDUIT SHALL ALSO BE PROVIDED FOR FUTURE COMMUNICATION CABLING.
3. THE CONDUITS SHALL EXTEND TO THE LIMITS OF THE WORKS OR BOUNDARIES OF THE DEVELOPMENT SITE.
4. THE CONDUITS SHALL BE CAPPED FOR FUTURE EXPANSION. THIS WILL ALSO MINIMISE THE NEED TO EXCAVATE THE NEWLY LAID FOOTPATHS ADJACENT TO THE DEVELOPMENT SITE.
5. ELECTRICAL CONTRACTORS SHALL SAW CUT & EXCAVATE THE EXISTING SURFACE TO INSTALL NEW POLE LUMINAIRES. REINSTATE TRENCH WITH APPROPRIATE BACK FILL & COMPACTION, INCLUDING FINISHING OF TRENCH WITH COLD MIX ASPHALT OR TO MATCH WITH EXISTING FINISH. ALLOW FOR SLIGHT OVER FILL TO AVOID SAGGING, ALLOW FOR THESE WORKS TO BE UNDERTAKEN TO AVOID DISRUPTION DURING NORMAL WORKING DAYS/HOURS.
6. CONTRACTOR TO CO–ORDINATE WITH COUNCIL THE TRENCH ALLOCATION FOR THE NEW SMART POLES.
7. STREET LIGHT MAINS TO HAVE 500mm COVER IN FOOTWAY AND 750mm IN ROADWAY.
8. CONTRACTOR TO LIAISE WITH COUNCIL AND AUTHORITIES ON THE UNDERGROUNDING PLACEMENT OF ELECTRICAL CONDUITS.
9. ALL CONDUITS MUST COMPLY WITH RELEVANT SECTIONS OF AS/NZS 2053 AND COUNCIL REQUIREMENTS.
10. ALL THE CABLE LAYING TO BE RECORDED IN COMPLIANCE WITH AS/NZS 3000.
11. RADIUS OF BEND OF CABLE TO COMPLY WITH CABLE MANUFACTURE AND COUNCIL REQUIREMENTS.
12. IF ANY EXCAVATION OR U/G WORKS ARE TO BE DONE ALL SURFACES MUST BE RESTORED TO ORIGINAL STATE UPON COMPLETION OF THE PROJECT.
13. LOCATION OF CONDUITS ON FOOTPATH IS AS PER COUNCIL REQUIREMENTS.
14. CONTRACTOR TO LOCATE COMMS CONDUITS AS PER AUSTRALIAN STANDARD AND CITY OF RYDE COUNCIL'S REQUIREMENT.

ASSET HANDOVER

THE FOLLOWING SHALL BE PROVIDED TO COUNCIL PRIOR TO THE HANDOVER OF THE STREET LIGHTING INSTALLATION AND TRANSFER OF ENERGY ACCOUNT FROM THE DEVELOPER TO COUNCIL;

1. CERTIFICATION FROM A CHARTERED STRUCTURAL ENGINEER (REGISTERED ON THE NER OF ENGINEERS AUSTRALIA) CONFIRMING THAT THE WORKS HAVE BEEN CONSTRUCTED IN ACCORDANCE WITH COUNCIL–APPROVED DRAWINGS AND CITY OF RYDE'S STANDARDS AND SPECIFICATIONS. THE CERTIFICATE SHALL CONTAIN PHOTOGRAPHS OF THE WORKS IN PROGRESS AND A COMMENTARY OF THE INSPECTED WORKS, INCLUDING ANY DEFICIENCIES AND RECTIFICATIONS THAT WERE UNDERTAKEN;
2. WORKS AS EXECUTED DRAWINGS;
3. A SET OF ACCESS KEYS
4. MANUFACTURER'S WARRANTIES AND CERTIFICATES;
5. ASSET TAGS ON POLES AND METER BOX AS PER COUNCIL REQUIREMENTS;
6. METER INFORMATION (NMI FROM AUSGRID) AND RELEVANT DETAILS FOR THE TRANSFER OF THE ENERGY ACCOUNT TO COUNCIL NEEDS TO BE COMPLETED ON CCEW;
7. MAC ID FROM NEW 7 PIN NOTE AND WHICH ASSET NUMBER IT HAS BEEN INSTALLED ON IS TO BE RECORDED AND SUPPLIED TO RYDE COUNCIL BEFORE HANDOVER IS COMPLETED.

NOTE: A FINAL INSPECTION FOR THE PURPOSE OF HANDOVER TO COUNCIL SHALL BE CONDUCTED IN CONJUNCTION WITH COUNCIL'S ENGINEER, FOLLOWING THE COMPLETION OF THE WORKS. ADDITIONAL INSPECTIONS, IF REQUIRED, ARE SUBJECT TO ADDITIONAL FEES PAYABLE IN ACCORDANCE WITH COUNCIL'S CURRENT SCHEDULE OF FEES AND CHARGES.

PUBLIC LIGHTING SWITCHBOARD TAG SPECIFICATION

1. THE SIZE OF THE PLATE SHALL BE 200mm (LENGTH) x 60mm (HEIGHT).
2. THE TEXT SIZE FOR THE STREET NAME AND FOR "PUBLIC LIGHTING SWITCHBOARD" IS TO BE 13mm TALL AND THE TEXT SIZE FOR "PROPERTY OF CITY OF RYDE, ENQUIRIES: 9952 8222" IS TO BE 5mm. THE "CITY OF RYDE" LOGO IS TO BE 10mm TALL.
3. THE PLATE IS TO HAVE A SILVER (STAINLESS STEEL) BACKGROUND WITH BLACK TEXT AND LOGO PRINT.
4. THE LOGO AND TEXT ARE NO TO BE STICKER LETTERING.
5. THE MATERIAL OF THE PLATE AND THE ADHESIVE BACKING SHALL COMPLY WITH THE REQUIREMENTS OF THE DISTRIBUTION BOARD (GENERALLY STAINLESS STEEL).
6. THE STREET NAME SHALL BE PRINTED WITHOUT ANY ABBREVIATIONS. IF THE STREET NAME IS TOO LONG IT CAN BE PRINTED IN TWO LINES.
7. "PUBLIC LIGHTING SWITCHBOARD" IS TO BE PRINTED IN THE CENTRE OF THE TAG.
8. THE TAG BELOW WITH DIMENSIONS 60mm (LENGTH) x 30mm (HEIGHT) WITH "ELECTRICITY METER & MAIN SWITCH" IS TO BE PLACED ON THE FOOR WITH THE METER WITHIN (THERE MAY BE TWO SEPARATE DOORS – ONE FOR THE METER AND THE OTHER FOR THE DISTRIBUTION BOARD.

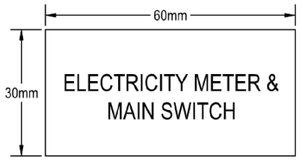

LIGHTING POLE TAG SPECIFICATION

GENERAL:

1. THE SIZE OF THE PLATE SHALL BE 200mm (LENGTH MEASURED ALONG THE CURVATURE OF THE POLE) x 60mm (HEIGHT).
2. THE PLATE IS TO HAVE A SILVER (ALUMINIUM) BACKGROUND WITH BLACK TEXT AND LOGO PRINT.
3. THE LOGO AND TEXT ARE NOT TO BE STICKER LETTERING.
4. THE PLATE SHALL BE CURVED TO SUIT THE CURVATURE OF THE POLE.
5. THE MATERIAL OF THE PLATE AND RIVETS SHALL COMPLTY WITH THE REQUIREMENTS OF THE MFP MANUFACTURER (GENERALLY ANODISED ALUMINIUM).
6. THE STREET NAME SHALL BE PRINTED WITHOUT ANY ABBREVIATIONS. IF THE STREET NAME IS TOO LONG, IT CAN BE PRINTED ON TWO LINES.
7. THE TEXT SIZE FOR THE STREET NAME AND FOR "POLE/ASSET NUMBER" IS TO BE 13mm TALL. THE TEXT SIZE FOR "PROPERTY OF CITY OF RYDE AND ENQUIRIES: 9952 8222" IS TO BE 5mm.
8. THE "CITY OF RYDE" LOGO IS TO BE 10mm TALL.
9. THE ASSET INDEX IS COMPILED VIA THE FOLLOWING RULES:

STREET LIGHTS
ASSET INDEX (STREET INDEX – 000) IS MADE UP BY COMBINING THE FOLLOWING TWO:
1. STREET INDEX – IS A FOUR–DIGIT NUMBER GIVEN TO EACH STREET BY COUNCIL'S ASSET SYSTEMS DEPARTMENT.
2. 000 – A THREE–DIGIT SEQUENTIAL NUMBER PROVIDED BY COUNCIL'S ASSET SYSTEMS DEPARTMENT.

PARK LIGHTS
ASSET INDEX (PARK INDEX – 000) IS MADE UP BY COMBINING THE FOLLOWING TWO:
1. PARK INDEX IS A FIVE DIGIT NUMBER GIVEN TO EACH PARK BY COUNCIL'S ASSET SYSTEMS DEPARTMENT
2. 000 – A THREE DIGIT SEQUENTIAL NUMBER PROVIDED BY COUNCIL'S ASSET SYSTEMS DEPARTMENT

STREET NAME (13mm)

ASSET LABEL (13mm)

COUNCIL LOGO (10mm) AND CONTACT & NUMBER (5mm)

STREET NAME (13mm)

ASSET LABEL (13mm)

COUNCIL LOGO (10mm) AND CONTACT NUMBER (5mm)

CITY OF RYDE
APPROVED FOR CONSTRUCTION
LDA.....
Signed.....
Date.....04 JUN 2021.....
Subject to the Conditions of Development Consent

No.	Description	Drn	Ckd	Date
A	FOR APPROVAL	EW	DT	07.04.20
B	GENERAL NOTES 16, 17& 18 ADDED	EW	DT	13.05.20
C	MINOR CORRECTIONS	EW	DT	09.06.20

No.	Description	Drn	Ckd	Date

CLIENT: FRASERS PROPERTY

ELECTRICAL CONSULTING ENGINEERS
Shelmerdines Consulting Engineers
ABN 40 003 331 879
55 Hume Street
Crows Nest NSW 2065
Telephone: (02) 9436 3021
Email: mail@shelmerdines.com.au
Web: www.shelmerdines.com.au

PROJECT
IVANHOE ESTATE
MACQUARIE PARK
DETAILED LIGHTING DESIGN
FOR CITY OF RYDE COUNCIL

DRAWING
ELECTRICAL SERVICES
GENERAL NOTES
SHEET 1

DATE	SCALE
FEB 2018	AS SHOWN @ A1
DRAWN: EW	CHECKED: DT
DRAWING NUMBER: 6820-ES-310	ISSUE NUMBER: C

LIGHTING DESIGN

1. ALL LUMINAIRES TO BE INSTALLED IN ACCORDANCE WITH THE MANUFACTURERS REQUIREMENT AND SPECIFICATIONS.
2. LIGHTING EQUIPMENT, LOCATION AND TYPES MAY NOT BE SUBSTITUTED WITHOUT PRIOR CONSENT AND APPROVAL OF THE DESIGNER. REFER IMAGE OF PROPOSED LUMINAIRE TO RIGHT.
3. COLOUR/FINISH OF ALL LIGHT FITTINGS, TRIMS, LENSES AND ACCESSORIES TO BE APPROVED BY THE COUNCIL. CONTRACTOR SHALL PROVIDE SAMPLES OF LIGHT FITTINGS PRIOR TO PROCUREMENT.
4. NEW POLE LUMINAIRES ARE TO BE LOCATED TO AVOID CLASHES WITH EXISTING TREES. CONFIRM LOCATION WITH LIGHTING DESIGNER PRIOR TO INSTALLATION. WHERE TREE BRANCHES ARE REQUIRED TO BE TRIMMED, THE AUTHORISED PERSON IS TO BE ADVISED PRIOR TO ANY WORKS.
5. 3 PHASE WIRING REQUIRED.
6. "PERMANENT POWER" AVAILABLE ON EACH MFP FOR THE SMART CONTROL TO FUNCTION.

PROPOSED LUMINAIRE
133W GERARD LIGHTING ARTERIAL 2

PROPOSED FLOODLIGHT
110W SYLVANIA MAXIMUS

SWITCHBOARD

CUBICLE:
1. 2.0mm FOLDED AND WELDED STAINLESS STEEL SHEET CONSTRUCTION, SWITCHBOARD CABINET IS TO BE BASE MOUNTED VIA HOT DIPPED GALVANISED CHANNEL IRON PLINTH.
2. ESCUTCHEON SECURED TO CABINET WITH DOME NUTS.
3. DOORS ARE SWUNG ON CHROME PLATED HINGES AND FIXED WITH SWING HANDLES.
4. 3mm ALUMINIUM GLAND PLATES FITTED TO BASE OF SWITCHBOARD.

FINISH:
1. SHEET METAL TO BE DEGREASED WITH SOLVENT, PHOPHORIC ACID WASHED, AND CLEANED WITH 180 GRIT PAPER. ELECTROSTATIC POLYESTER POWDER TO BE APPLIED AS FOLLOWS;
   - CABINET EXTERIOR – ORBITAL FINISH
   - CABINET INTERIOR – GLOSS WHITE
   - ESCUTCHEONS – GLOSS WHITE
   - PLINTH – 75mm HOT DIPPED GALVANISED

LABELS:
1. LABELS ARE TO BE MACHINE ENGRAVED FROM GRAVOPLY LAMINATE AND FIXED TO THE SWITCHBOARD METALWORK USING M3 SCREWS.

BUSBARS:
1. NEUTRAL AND EARTH BARS TO BE LOCATED IN A POSITION WHERE THEY WILL NOT BE OBSTRUCTED BY SUBMAIN CABLES.
2. NEUTRAL BAR TO BE FULL RATING OF ACTIVES.
3. NEUTRAL AND EARTH TERMINATIONS TO BE NUMBERED TO CORESPOND WWITH RESPECTIVE SUBCIRCUIT NUMBERS THAT APPEAR ON LABELS.

SPECIFICATIONS:
1. SWITCHBOARD MANFACTURED TO AS 61439.2.
2. FORM 2B SEPARATION TO AS 61439.2.
3. IP66 CONSTRUCTION TO AS 60529.
4. FAULT LEVEL – 10kA FOR 1 SEC COMMERCIAL & INDUSTRIAL AREAS REQUIRE 25kA AS PER NSW SIR.
5. 415 VOLT, 50Hz M.E.N LINK SYSTEM.
6. MAINS CABLES – BOTTOM ENTRY VIA 3mm ALUMINIUM GLAND PLATE.
7. SUBMAIN CABLES – BOTTOM EXCIT VIA 3mm ALUMINIUM GLAND PLATE.

SUBCIRCUITS

1. 3–PHASE CB OR LINKED 1–PHASE CBS MUST BE UTILISED. THE USE OF UNLINKED 1–PH CBS IS NOT PERMITTED BY AS 3000.

LOCKING

1. ALL STREET LIGHT SWITCHBOARDS SHALL BE LOCKED WITH UNIQUE ABLOY KEY PADLOCK, AS DETAILED BELOW:

Integrity ABLOY Key for all Street Lighting Switchboards

Master Key number associated with Registration Card 26060520 AUVG

INTEGRITY LOCKSMITHS AND SECURITY
Utilities Security Key System

Phone:
1300 664 582
1300 366 488

Fax:
1300 664 682

FOUNDATION & COLUMN

1. STRAIGHT PILES IS STANDARD. CANTILEVERED IF SITE CONSTRAINTS REQUIRE IT – SUBMIT PROOF THIS FOOTING I9S REQUIRED. THIS FOOTING MUST BE PREPARED BY A QUALIFIED STRUCTURAL ENGINEER REFERRED ON THE NER OF AUSTRALIA AND PROVIDED TO COUNCIL FOR REVIEW AND APPROVAL PRIOR TO THE INSTALLATION.
2. ALL LIGHTS TO SIT 750 BEHIND THE KERB OTHER THAN LIGHTS AT INTERSECTIONS WHERE SHALL BE LOCATED 1000 BEHIND THE KERB OR OTHERWISE NOTED ON THE DESIGN.

CITY OF RYDE
APPROVED FOR CONSTRUCTION
LDA.....
Signed.....
Date 04 JUN 2021
Subject to the Conditions of Development Consent

No.	Description	Drn	Ckd	Date	No.	Description	Drn	Ckd	Date
A	FOR APPROVAL	EW	DT	07.04.20					
B	FLOODLIGHT ADDED	EW	DT	04.05.20					
C	FOUNDATION NOTE REVISED	EW	DT	19.06.20					

CLIENT: FRASERS PROPERTY

ELECTRICAL CONSULTING ENGINEERS
Shelmerdines Consulting Engineers
ABN 40 003 331 879
55 Hume Street
Crows Nest NSW 2065
Telephone: (02) 9436 3021
Email: mail@shelmerdines.com.au
Web: www.shelmerdines.com.au

PROJECT
IVANHOE ESTATE
MACQUARIE PARK
DETAILED LIGHTING DESIGN
FOR CITY OF RYDE COUNCIL

DRAWING
ELECTRICAL SERVICES
GENERAL NOTES
SHEET 2

DATE	SCALE
FEB 2018	AS SHOWN @ A1
DRAWN: EW	CHECKED: DT
DRAWING NUMBER: 6820-ES-311	ISSUE NUMBER: C

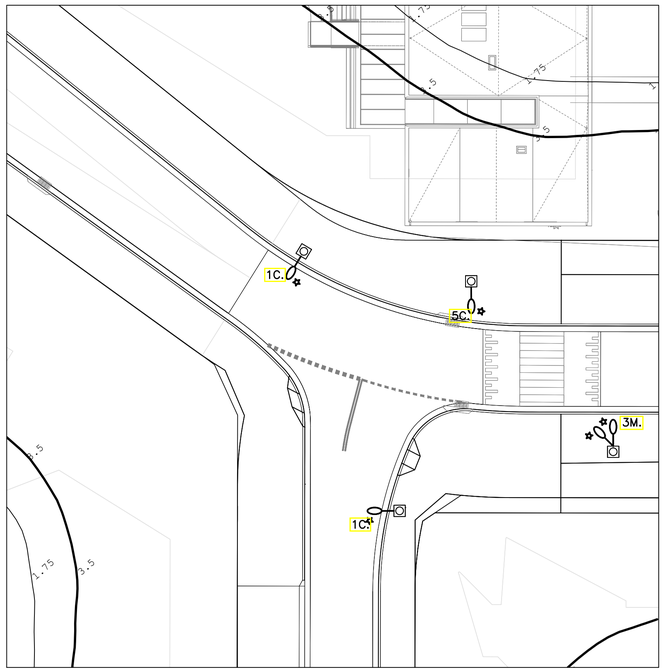

INTERSECTION 1 ISOLUX

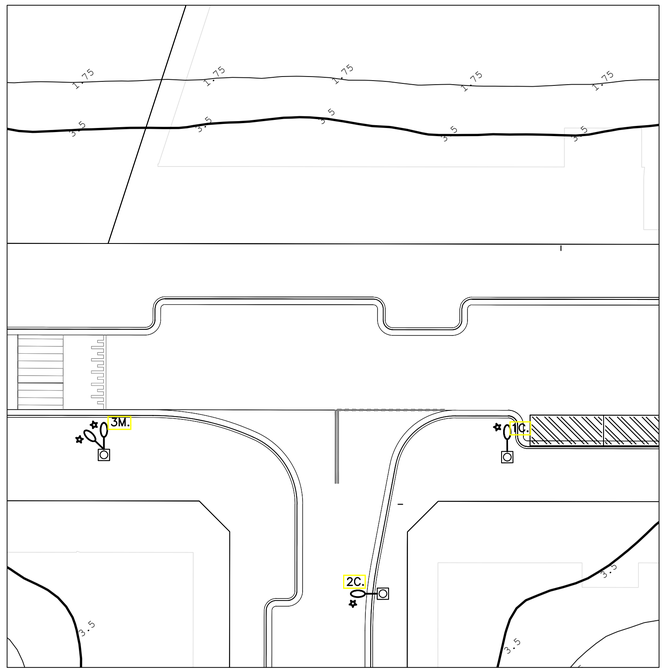

INTERSECTION 2 ISOLUX

Luminaire Location Summary						
LumNo	Label	X	Y	Z	Orient	Tilt
53	ATB2 40BLEDE10 XXXXX R3 4K 5K	325544.812	6260509.895	10.5	49.002	0
55	Sylvania-Lighting-SLED-110W-4	325632.457	6260451.451	6	228.797	0
56	Sylvania-Lighting-SLED-110W-4	325679.761	6260409.83	6	228.768	0
58	ATB2 40BLEDE10 XXXXX R3 4K 5K	325728.317	6260349.235	10.5	47.538	0
59	ATB2 40BLEDE10 XXXXX R3 4K 5K	325528.546	6260517.734	10.5	138.938	0
61	ATB2 40BLEDE10 XXXXX R3 4K 5K	325482.5	6260454.083	9	48.76	0
62	ATB2 40BLEDE10 XXXXX R3 4K 5K	325505.479	6260434.127	9	48.76	0
63	ATB2 40BLEDE10 XXXXX R3 4K 5K	325552.463	6260392.885	9	48.76	0
65	ATB2 40BLEDE10 XXXXX R3 4K 5K	325599.476	6260351.836	9	48.76	0
66	ATB2 40BLEDE10 XXXXX R3 4K 5K	325623.476	6260330.595	9	48.76	0
72	ATB2 40BLEDE10 XXXXX R3 4K 5K	325764.285	6260340.902	10.5	247.344	0
79	ATB2 40BLEDE10 XXXXX R3 4K 5K	325521.683	6260563.697	10.5	12.813	0
82	ATB2 40BLEDE10 XXXXX R3 4K 5K	325536.311	6260538.742	10.5	197.69	0
83	ATB2 40BLEDE10 XXXXX R3 4K 5K	325486.116	6260470.466	9	138.706	0
93	ATB2 40BLEDE10 XXXXX R3 4K 5K	325649.793	6260325.626	9	138.682	0
94	ATB2 40BLEDE10 XXXXX R3 4K 5K	325688.416	6260369.298	9	138.582	0
98	ATB2 40BLEDE10 XXXXX R3 4K 5K	325703.34	6260371.019	10.5	49.051	0
99	Sylvania-Lighting-SLED-110W-4	325632.222	6260433.267	6	87.574	0
100	ATB2 40BLEDE10 XXXXX R3 4K 5K	325584.488	6260474.864	10.5	48.755	0
101	ATB2 40BLEDE10 XXXXX R3 4K 5K	325566.091	6260510.054	10.5	228.799	0
103	Sylvania-Lighting-SLED-110W-4	325595.485	6260365.269	6	228.776	0
106	ATB2 40BLEDE10 XXXXX R3 4K 5K	325833.741	6260282.581	10.5	54.647	0
108	ATB2 40BLEDE10 XXXXX R3 4K 5K	325861.181	6260261.232	10.5	49.214	0
109	Sylvania-Lighting-SLED-110W-4	325545.204	6260528.022	6	228.819	0
119	ATB2 40BLEDE10 XXXXX R3 4K 5K	325519.697	6260593.244	10.5	217.809	0
120	ATB2 40BLEDE10 XXXXX R3 4K 5K	325576.481	6260371.841	9	48.76	0
121	ATB2 40BLEDE10 XXXXX R3 4K 5K	325528.315	6260413.893	9	48.76	0
122	ATB2 40BLEDE10 XXXXX R3 4K 5K	325666.584	6260344.581	9	138.582	0
123	ATB2 40BLEDE10 XXXXX R3 4K 5K	325508.171	6260495.7	9	138.938	0
124	ATB2 40BLEDE10 XXXXX R3 4K 5K	325887.711	6260238.342	10.5	49.214	0
125	Sylvania-Lighting-SLED-110W-4	325544.788	6260509.78	6	83.979	0
127	Sylvania-Lighting-SLED-110W-4	325678.691	6260392.816	6	90	0
128	Sylvania-Lighting-SLED-110W-4	325599.477	6260351.835	6	77.866	0
129	ATB2 40BLEDE10 XXXXX R3 4K 5K	325621.788	6260461.261	10.5	228.799	0
130	ATB2 40BLEDE10 XXXXX R3 4K 5K	325632.239	6260433.257	10.5	48.755	0
131	ATB2 40BLEDE10 XXXXX R3 4K 5K	325653.773	6260414.478	10.5	48.788	0
132	ATB2 40BLEDE10 XXXXX R3 4K 5K	325805.919	6260304.497	10.5	49.285	0
133	ATB2 40BLEDE10 XXXXX R3 4K 5K	325678.624	6260392.75	10.5	49	0

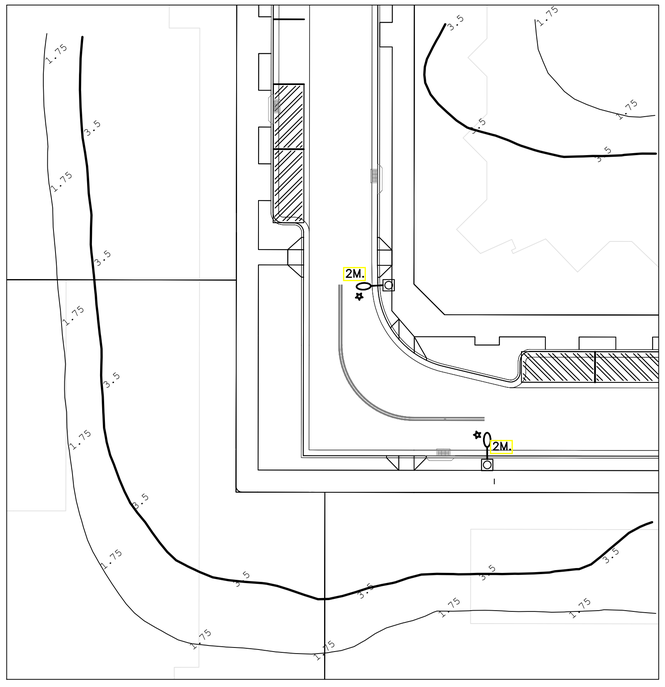

ROAD NO.2 CORNER 1

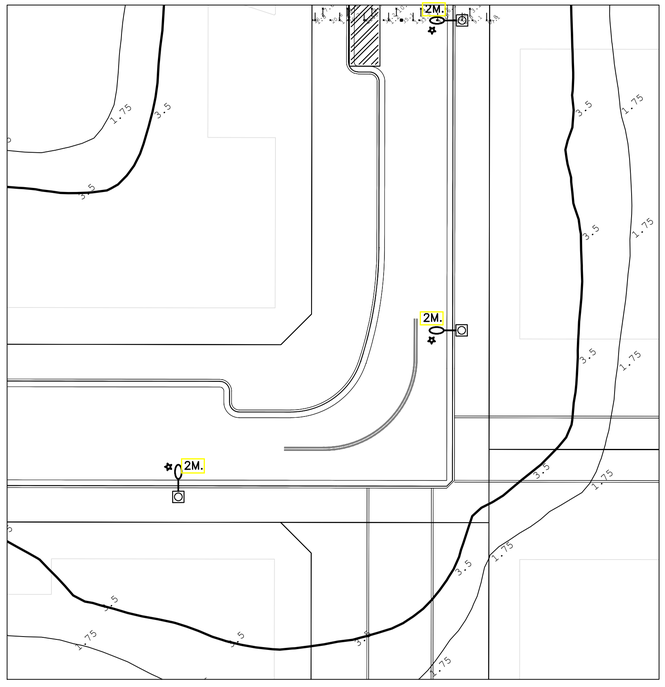

ROAD NO.2 CORNER 2

CITY OF RYDE
APPROVED FOR CONSTRUCTION
LDA.....
Signed.....
Date 04 JUN 2021
Subject to the Conditions of Development Consent

No.	Description	Drn	Ckd	Date
A	FOR APPROVAL	EW	DT	07.04.20
B	ISOLUX AND SCHEDULE EDITED	EW	DT	01.05.20
C	20 LUX LINE REMOVED	EW	DT	09.06.20
D	UPDATED ISOLUX LINES AND UPDATED BACKGROUND	EW	DT	20.05.21

No.	Description	Drn	Ckd	Date

CLIENT: FRASERS PROPERTY

ELECTRICAL CONSULTING ENGINEERS
Shelmerdines Consulting Engineers
ABN 40 003 331 879
55 Hume Street
Crows Nest NSW 2065
Telephone: (02) 9436 3021
Email: mail@shelmerdines.com.au
Web: www.shelmerdines.com.au

PROJECT
IVANHOE ESTATE
MACQUARIE PARK
DETAILED LIGHTING DESIGN
FOR CITY OF RYDE COUNCIL

DRAWING
ELECTRICAL SERVICES
ISOLUX DIAGRAMS AND LUMINAIRE SCHEDULES

DATE	SCALE
FEB 2018	AS SHOWN @ A1
DRAWN: EW	CHECKED: DT
DRAWING NUMBER: 6820-ES-312	ISSUE NUMBER: D

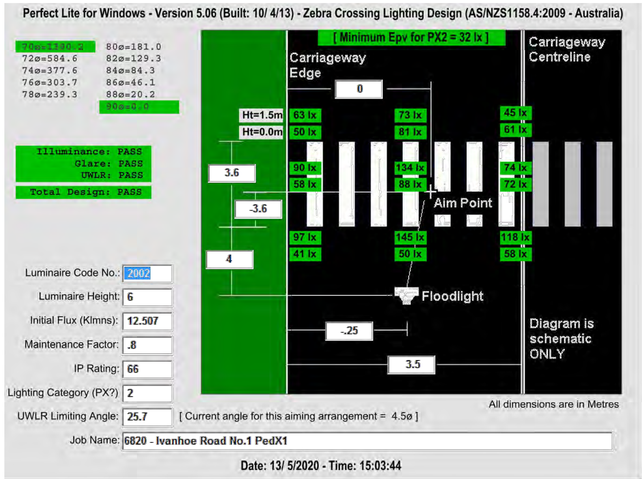

NOTE: MFP IS 3.25m REAR OF KERB.
FLOODLIGHT OUTREACH IS 3m.

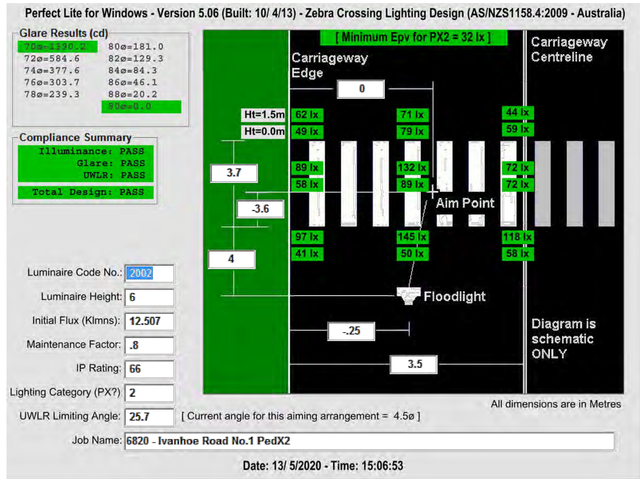

NOTE: MFP IS 3.25m REAR OF KERB.
FLOODLIGHT OUTREACH IS 3m.

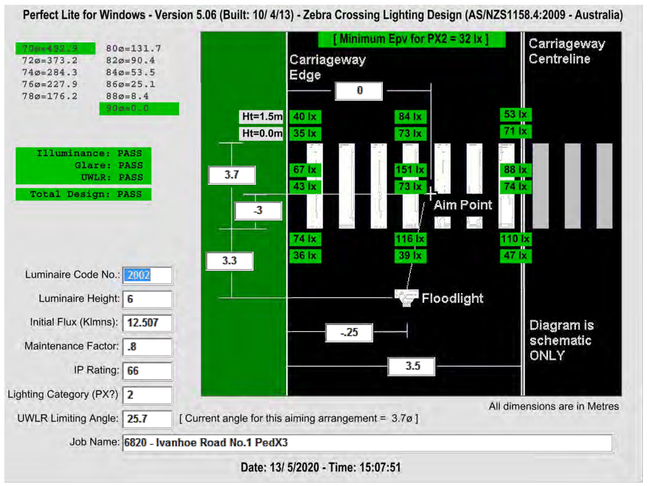

NOTE: MFP IS 3.25m REAR OF KERB.
FLOODLIGHT OUTREACH IS 3m.

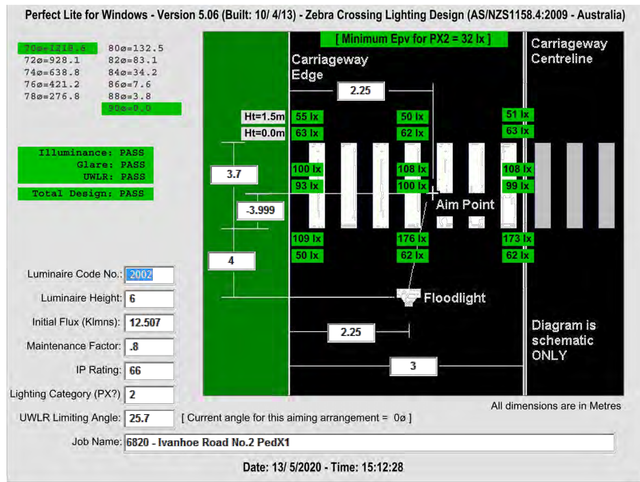

NOTE: MFP IS 0.75m REAR OF KERB.
FLOODLIGHT OUTREACH IS 3m.

PEDESTRIAN CROSSING LIGHTING CALCULATIONS

CITY OF RYDE
APPROVED FOR CONSTRUCTION
LDA.....
Signed.....
Date 04 JUN 2021
Subject to the Conditions of Development Consent

No.	Description	Drn	Ckd	Date
A	FOR APPROVAL	EW	DT	07.04.20
B	PEDX CALCS UPDATED TO SUIT NEW POLE LOCATIONS	EW	DT	13.05.20
C	NOTES ADDED TO CALCS	EW	DT	11.06.20

No.	Description	Drn	Ckd	Date

CLIENT: FRASERS PROPERTY

ELECTRICAL CONSULTING ENGINEERS
Shelmerdines Consulting Engineers
ABN 40 003 331 879
55 Hume Street
Crows Nest NSW 2065
Telephone: (02) 9436 3021
Email: mail@shelmerdines.com.au
Web: www.shelmerdines.com.au

PROJECT
IVANHOE ESTATE
MACQUARIE PARK
DETAILED LIGHTING DESIGN
FOR CITY OF RYDE COUNCIL

DRAWING
ELECTRICAL SERVICES
PEDESTRIAN LIGHTING CALCULATIONS

DATE	SCALE
FEB 2018	AS SHOWN @ A1
DRAWN: EW	CHECKED: DT
DRAWING NUMBER: 6820-ES-313	ISSUE NUMBER: C

Page 1

Shelmerdines
****

RESULTS FOR RUNNING SAASTAN WITH NOMINATED SPACINGS
[AUSTRALIA MODE]

Job name: 6820 - Ivanhoe Estate Road No.1

Luminaire I-table: J:\6820\Elec\Lighting Calculations\Gerard Lighting Arterial ATB 2\ATB2_40BLEDE10_XXXXX_R3_4K_5K_133W .cie
Luminaire Description: ATB2_40BLEDE10_XXXXX_R3_4K_5K_133W use 1
Lamp Wattage & Type: 133W LED R3 4K
Light Source: LED
Stores Code:
Upcast Angle: 0 Degrees
Mounting Height: 10.5 m
Overhang 1st Row:-0.25 m
Outreach Size: 3
Road Surface: CIE R3
Traffic Flow: Two Way ----> <----

Luminous Flux: 16.24 Klms
Arrangement: 3 Single-Stagger
Maintenance Factor: 0.8
Overhang 2nd Row:-0.25 m
Outreach Size: 3

Lighting Category: V5 **Carriageway Width: 7 m**

Spacing (m)	Traffic Direction	Lbar (>=0.35) or(>=0.38)	Uo (>=0.33) (>=0.33)	Ul (>=0.5) "	UWLR (=<3) "	TI (=<20) "	Esl (>=50) "	Esr (>=50) "	Comply with V5
28.00	Normal	1.48	0.62	0.64	.00	9.20	79.88	79.88	YES
29.00	Normal	1.43	0.61	0.64	.00	9.31	80.02	80.02	YES
30.00	Normal	1.38	0.61	0.64	.00	9.50	80.00	80.00	YES
31.00	Normal	1.33	0.62	0.63	.00	9.71	79.85	79.90	YES
32.00	Normal	1.29	0.63	0.62	.00	9.90	79.86	79.92	YES
33.00	Normal	1.25	0.62	0.62	.00	10.08	79.89	79.89	YES
34.00	Normal	1.21	0.61	0.61	.00	10.31	80.05	80.05	YES
35.00	Normal	1.18	0.61	0.58	.00	10.49	80.00	80.00	YES
36.00	Normal	1.15	0.59	0.56	.00	10.70	79.82	79.92	YES
37.00	Normal	1.11	0.58	0.54	.00	10.87	79.86	79.92	YES
38.00	Normal	1.09	0.56	0.54	.00	11.04	80.02	80.02	YES
39.00	Normal	1.06	0.56	0.53	.00	11.24	80.05	80.05	YES
40.00	Normal	1.03	0.55	0.51	.00	11.42	80.00	80.00	YES
41.00	Normal	1.00	0.54	0.49	.00	11.62	79.82	79.93	NO
42.00	Normal	.98	0.53	0.47	.00	11.81	79.86	79.92	NO
43.00	Normal	.96	0.52	0.47	.00	12.01	80.02	80.02	NO
44.00	Normal	.94	0.51	0.45	.00	12.16	80.05	80.05	NO
45.00	Normal	.92	0.50	0.44	.00	12.34	80.00	80.00	NO

MAX DESIGN SPACING

NOTES: 1) Where 'Normal' &/or 'Oncoming' lines are shown, compliance with the nominated Category, at a particular spacing, is only applicable when there is a 'Yes' on each line i.e. ANY 'No' indicates failure at that spacing.
2) Calculations use the original SAASTAN software

PleVcat - Vers 5.09 (Built: 10/ 4/13) *Run: 5/ 6/2020 at 16:32:13*

ROAD NO.1 −0.25/−0.25 OVERHANG STAGGERED ARRANGEMENT

Page 1

Shelmerdines
****

RESULTS FOR RUNNING SAASTAN WITH NOMINATED SPACINGS
[AUSTRALIA MODE]

Job name: 6820 - Ivanhoe Estate Road No.1

Luminaire I-table: J:\6820\Elec\Lighting Calculations\Gerard Lighting Arterial ATB 2\ATB2_40BLEDE10_XXXXX_R3_4K_5K_133W .cie
Luminaire Description: ATB2_40BLEDE10_XXXXX_R3_4K_5K_133W use 1
Lamp Wattage & Type: 133W LED R3 4K
Light Source: LED
Stores Code:
Upcast Angle: 0 Degrees
Mounting Height: 10.5 m
Overhang 1st Row: 2.25 m
Outreach Size: 3
Road Surface: CIE R3
Traffic Flow: Two Way ----> <----

Luminous Flux: 16.24 Klms
Arrangement: 3 Single-Stagger
Maintenance Factor: 0.8
Overhang 2nd Row: 2.25 m
Outreach Size: 3

Lighting Category: V5 **Carriageway Width: 7 m**

Spacing (m)	Traffic Direction	Lbar (>=0.35) or(>=0.38)	Uo (>=0.33) (>=0.31)	Ul (>=0.5) "	UWLR (=<3) "	TI (=<20) "	Esl (>=50) "	Esr (>=50) "	Comply with V5
30.00	Normal	1.43	0.62	0.75	.00	9.15	71.40	71.40	YES
31.00	Normal	1.38	0.62	0.72	.00	9.35	71.29	71.59	YES
32.00	Normal	1.34	0.61	0.71	.00	9.53	71.36	71.61	YES
33.00	Normal	1.30	0.61	0.70	.00	9.70	71.34	71.34	YES
34.00	Normal	1.26	0.60	0.68	.00	9.90	71.34	71.34	YES
35.00	Normal	1.23	0.59	0.65	.00	10.08	71.40	71.40	YES
36.00	Normal	1.19	0.58	0.61	.00	10.26	71.29	71.58	YES
37.00	Normal	1.16	0.57	0.60	.00	10.44	71.36	71.61	YES
38.00	Normal	1.13	0.56	0.59	.00	10.59	71.32	71.32	YES
39.00	Normal	1.10	0.54	0.56	.00	10.77	71.35	71.35	YES
40.00	Normal	1.08	0.53	0.54	.00	10.94	71.40	71.40	YES
41.00	Normal	1.05	0.52	0.53	.00	11.13	71.25	71.56	YES
42.00	Normal	1.03	0.51	0.51	.00	11.31	71.36	71.61	YES
43.00	Normal	1.00	0.50	0.50	.00	11.49	71.37	71.37	YES
44.00	Normal	.98	0.48	0.49	.00	11.62	71.33	71.33	NO
45.00	Normal	.96	0.47	0.47	.00	11.79	71.40	71.40	NO
46.00	Normal	.94	0.46	0.42	.00	11.97	71.31	71.55	NO
47.00	Normal	.92	0.44	0.41	.00	12.14	71.37	71.62	NO
48.00	Normal	.90	0.42	0.38	.00	12.30	71.35	71.35	NO
49.00	Normal	.88	0.41	0.37	.00	12.47	71.38	71.38	NO
50.00	Normal	.87	0.40	0.35	.00	12.63	71.40	71.40	NO
51.00	Normal	.85	0.38	0.32	.00	12.81	71.31	71.55	NO
52.00	Normal	.83	0.37	0.31	.00	12.97	71.37	71.62	NO

MAX DESIGN SPACING

NOTES: 1) Where 'Normal' &/or 'Oncoming' lines are shown, compliance with the nominated Category, at a particular spacing, is only applicable when there is a 'Yes' on each line i.e. ANY 'No' indicates failure at that spacing.
2) Calculations use the original SAASTAN software

PleVcat - Vers 5.09 (Built: 10/ 4/13) *Run: 30/ 3/2020 at 11:33:36*

ROAD NO.1 2.25/2.25 OVERHANG STAGGERED ARRANGEMENT

Page 1

Shelmerdines
****

RESULTS FOR RUNNING SAASTAN WITH NOMINATED SPACINGS
[AUSTRALIA MODE]

Job name: 6820 - Ivanhoe Estate Road No.1

Luminaire I-table: J:\6820\Elec\Lighting Calculations\Gerard Lighting Arterial ATB 2\ATB2_40BLEDE10_XXXXX_R3_4K_5K_133W .cie
Luminaire Description: ATB2_40BLEDE10_XXXXX_R3_4K_5K_133W use 1
Lamp Wattage & Type: 133W LED R3 4K
Light Source: LED
Stores Code:
Upcast Angle: 0 Degrees
Mounting Height: 10.5 m
Overhang 1st Row:-0.25 m
Outreach Size: 3
Road Surface: CIE R3
Traffic Flow: Two Way ----> <----

Luminous Flux: 16.24 Klms
Arrangement: 3 Single-Left
Maintenance Factor: 0.8

Lighting Category: V5 **Carriageway Width: 7 m**

Spacing (m)	Traffic Direction	Lbar (>=0.35) or(>=0.38)	Uo (>=0.33) (>=0.33)	Ul (>=0.5) "	UWLR (=<3) "	TI (=<20) "	Esl (>=50) "	Esr (>=50) "	Comply with V5
25.00	Normal	1.57	0.62	0.90	.00	8.79	73.60	86.53	YES
25.00	Oncoming	1.73	0.62	0.94	.00	6.70	86.53	73.60	YES
26.00	Normal	1.51	0.62	0.90	.00	9.00	73.62	86.50	YES
26.00	Oncoming	1.66	0.62	0.95	.00	6.85	86.50	73.62	YES
27.00	Normal	1.46	0.62	0.88	.00	9.22	73.63	86.50	YES
27.00	Oncoming	1.60	0.62	0.94	.00	7.01	86.50	73.63	YES
28.00	Normal	1.41	0.62	0.86	.00	9.30	73.57	86.52	YES
28.00	Oncoming	1.55	0.62	0.93	.00	7.16	86.52	73.57	YES
29.00	Normal	1.36	0.63	0.84	.00	9.53	73.50	86.54	YES
29.00	Oncoming	1.49	0.63	0.94	.00	7.23	86.54	73.50	YES
30.00	Normal	1.31	0.63	0.83	.00	9.73	73.43	86.53	YES
30.00	Oncoming	1.44	0.62	0.92	.00	7.38	86.53	73.43	YES
31.00	Normal	1.27	0.63	0.83	.00	9.95	73.41	86.42	YES
31.00	Oncoming	1.39	0.62	0.92	.00	7.54	86.42	73.41	YES
32.00	Normal	1.23	0.63	0.81	.00	10.15	73.45	86.38	YES
32.00	Oncoming	1.35	0.61	0.92	.00	7.69	86.38	73.45	YES
33.00	Normal	1.19	0.63	0.78	.00	10.36	73.44	86.39	YES
33.00	Oncoming	1.31	0.61	0.90	.00	7.85	86.39	73.44	YES
34.00	Normal	1.16	0.63	0.77	.00	10.58	73.39	86.33	YES
34.00	Oncoming	1.27	0.60	0.88	.00	8.02	86.33	73.39	YES
35.00	Normal	1.13	0.62	0.76	.00	10.78	73.39	86.24	YES
35.00	Oncoming	1.24	0.60	0.86	.00	8.17	86.24	73.39	YES

MAX DESIGN SPACING

NOTES: 1) Where 'Normal' &/or 'Oncoming' lines are shown, compliance with the nominated Category, at a particular spacing, is only applicable when there is a 'Yes' on each line i.e. ANY 'No' indicates failure at that spacing.
2) Calculations use the original SAASTAN software

PleVcat - Vers 5.09 (Built: 10/ 4/13) *Run: 18/ 6/2020 at 15:30:33*

ROAD NO.1 −0.25 OVERHANG SINGLE SIDED ARRANGEMENT

Page 1

Shelmerdines
****

RESULTS FOR RUNNING SAASTAN WITH NOMINATED SPACINGS
[AUSTRALIA MODE]

Job name: 6820 - Ivanhoe Estate Road No.1 Curve 2

Luminaire I-table: J:\6820\Elec\Lighting Calculations\Gerard Lighting Arterial ATB 2\ATB2_40BLEDE10_XXXXX_R3_4K_5K_133W .cie
Luminaire Description: ATB2_40BLEDE10_XXXXX_R3_4K_5K_133W use 1
Lamp Wattage & Type: 133W LED R3 4K
Light Source: LED
Stores Code:
Upcast Angle: 0 Degrees
Mounting Height: 10.5 m
Overhang 1st Row:-0.25 m
Outreach Size: 3
Road Surface: CIE R3
Traffic Flow: Two Way ----> <----

Luminous Flux: 16.24 Klms
Arrangement: 3 Single-Stagger
Maintenance Factor: 0.8
Overhang 2nd Row: 2.25 m
Outreach Size: 3

Lighting Category: V5 **Carriageway Width: 7 m**

Spacing (m)	Traffic Direction	Lbar (>=0.35) or(>=0.38)	Uo (>=0.33) (>=0.31)	Ul (>=0.5) "	UWLR (=<3) "	TI (=<20) "	Esl (>=50) "	Esr (>=50) "	Comply with V5
30.00	Normal	1.39	0.54	0.80	.00	9.50	82.50	68.14	YES
30.00	Oncoming	1.42	0.60	0.62	.00	8.05	68.14	82.50	YES
31.00	Normal	1.34	0.55	0.79	.00	9.71	82.27	68.05	YES
31.00	Oncoming	1.37	0.60	0.62	.00	8.21	68.13	82.66	YES
32.00	Normal	1.30	0.54	0.77	.00	9.90	82.36	68.02	YES
32.00	Oncoming	1.33	0.61	0.60	.00	8.29	68.11	82.74	YES
33.00	Normal	1.27	0.53	0.76	.00	10.07	82.31	68.17	YES
33.00	Oncoming	1.29	0.60	0.59	.00	8.43	68.17	82.31	YES
34.00	Normal	1.23	0.52	0.72	.00	10.28	82.51	68.13	YES
34.00	Oncoming	1.25	0.59	0.58	.00	8.62	68.13	82.51	YES
35.00	Normal	1.19	0.51	0.70	.00	10.46	82.50	68.14	YES
35.00	Oncoming	1.21	0.58	0.55	.00	8.77	68.14	82.50	YES
36.00	Normal	1.16	0.51	0.67	.00	10.65	82.27	68.04	YES
36.00	Oncoming	1.18	0.56	0.52	.00	8.93	68.09	82.68	YES
37.00	Normal	1.13	0.50	0.66	.00	10.83	82.35	68.02	YES
37.00	Oncoming	1.15	0.55	0.50	.00	9.07	68.11	82.73	YES
38.00	Normal	1.10	0.48	0.66	.00	10.99	82.40	68.20	YES
38.00	Oncoming	1.12	0.55	0.51	.00	9.20	68.20	82.40	YES
39.00	Normal	1.07	0.47	0.66	.00	11.18	82.51	68.13	YES
39.00	Oncoming	1.09	0.55	0.50	.00	9.36	68.13	82.51	YES
40.00	Normal	1.05	0.46	0.64	.00	11.36	82.50	68.14	YES
40.00	Oncoming	1.06	0.54	0.48	.00	9.51	68.14	82.50	NO

MAX DESIGN SPACING

NOTES: 1) Where 'Normal' &/or 'Oncoming' lines are shown, compliance with the nominated Category, at a particular spacing, is only applicable when there is a 'Yes' on each line i.e. ANY 'No' indicates failure at that spacing.
2) Calculations use the original SAASTAN software

PleVcat - Vers 5.09 (Built: 10/ 4/13) *Run: 19/ 6/2020 at 11:52:18*

ROAD NO.1 −0.25/2.25 OVERHANG STAGGERED ARRANGEMENT

Page 1

Shelmerdines
****

RESULTS FOR RUNNING SAASTAN WITH NOMINATED SPACINGS
[AUSTRALIA MODE]

Job name: 6820 - Ivanhoe Estate East Bridge

Luminaire I-table: J:\6820\Elec\Lighting Calculations\Gerard Lighting Arterial ATB 2\ATB2_40BLEDE10_XXXXX_R3_4K_5K_133W .cie
Luminaire Description: ATB2_40BLEDE10_XXXXX_R3_4K_5K_133W use 1
Lamp Wattage & Type: 133W R3
Light Source: LED
Stores Code:
Upcast Angle: 0 Degrees
Mounting Height: 10.5 m
Overhang 1st Row: 2.25 m
Outreach Size: 3
Road Surface: CIE R3
Traffic Flow: Two Way ----> <----

Luminous Flux: 16.24 Klms
Arrangement: 1 Single-Left
Maintenance Factor: 0.8

Lighting Category: V5 **Carriageway Width: 7 m**

Spacing (m)	Traffic Direction	Lbar (>=0.35) or(>=0.38)	Uo (>=0.33) (>=0.31)	Ul (>=0.5) "	UWLR (=<3) "	TI (=<20) "	Esl (>=50) "	Esr (>=50) "	Comply with V5
35.00	Normal	1.19	0.68	0.70	.00	8.79	46.33	91.43	NO
35.00	Oncoming	1.24	0.55	0.81	.00	9.75	91.43	46.33	NO
36.00	Normal	1.16	0.67	0.64	.00	8.95	46.36	91.39	NO
36.00	Oncoming	1.21	0.54	0.77	.00	9.94	91.39	46.36	NO
37.00	Normal	1.13	0.66	0.62	.00	9.10	46.25	91.40	NO
37.00	Oncoming	1.18	0.53	0.75	.00	10.11	91.40	46.25	NO
38.00	Normal	1.10	0.64	0.61	.00	9.23	46.15	91.43	NO
38.00	Oncoming	1.15	0.52	0.74	.00	10.15	91.43	46.15	NO
39.00	Normal	1.07	0.63	0.61	.00	9.40	46.09	91.42	NO
39.00	Oncoming	1.12	0.52	0.73	.00	10.34	91.42	46.09	NO
40.00	Normal	1.04	0.62	0.57	.00	9.45	46.01	91.42	NO
40.00	Oncoming	1.09	0.51	0.72	.00	10.54	91.42	46.01	NO
41.00	Normal	1.02	0.62	0.54	.00	9.60	45.86	91.36	NO
41.00	Oncoming	1.06	0.50	0.71	.00	10.71	91.36	45.86	NO
42.00	Normal	1.00	0.61	0.53	.00	9.75	45.97	91.28	NO
42.00	Oncoming	1.04	0.48	0.69	.00	10.88	91.28	45.97	NO
43.00	Normal	.97	0.58	0.51	.00	9.92	46.21	91.18	NO
43.00	Oncoming	1.01	0.48	0.64	.00	11.08	91.18	46.21	NO
44.00	Normal	.95	0.57	0.50	.00	10.06	46.27	91.10	NO
44.00	Oncoming	.99	0.46	0.62	.00	11.27	91.10	46.27	NO
45.00	Normal	.93	0.57	0.49	.00	10.20	46.11	91.02	NO
45.00	Oncoming	.97	0.44	0.61	.00	11.43	91.02	46.11	NO

44m COMPLIES WITH CATEGORY V5 WITHIN THE CARRIAGEWAY ONLY. THIS DESIGN DOES NOT COMPLY WITH V5 SURROUND REQUIREMENTS. EXEMPTION FOR NON−COMPLIANCE HAS BEEN GRANTED BY THE CITY OF RYDE.

NOTES: 1) Where 'Normal' &/or 'Oncoming' lines are shown, compliance with the nominated Category, at a particular spacing, is only applicable when there is a 'Yes' on each line i.e. ANY 'No' indicates failure at that spacing.
2) Calculations use the original SAASTAN software

PleVcat - Vers 5.09 (Built: 10/ 4/13) *Run: 4/ 5/2020 at 15:21:44*

ROAD NO.1 EAST OF BRIDGE 2.25 OVERHANG SINGLE SIDED ARRANGEMENT

Page 1

Shelmerdines
****

RESULTS FOR RUNNING SAASTAN WITH NOMINATED SPACINGS
[AUSTRALIA MODE]

Job name: 6820 - Ivanhoe Estate Road No.2

Luminaire I-table: J:\6820\Elec\Lighting Calculations\Gerard Lighting Arterial ATB 2\ATB2_40BLEDE10_XXXXX_R3_4K_5K_133W .cie
Luminaire Description: ATB2_40BLEDE10_XXXXX_R3_4K_5K_133W use 1
Lamp Wattage & Type: 133W LED R3 4K
Light Source: LED
Stores Code:
Upcast Angle: 0 Degrees
Mounting Height: 9 m
Overhang 1st Row: 2.25 m
Outreach Size: 3
Road Surface: CIE R3
Traffic Flow: Two Way ----> <----

Luminous Flux: 16.24 Klms
Arrangement: 1 Single-Left
Maintenance Factor: 0.8

Lighting Category: V5 **Carriageway Width: 6 m**

Spacing (m)	Traffic Direction	Lbar (>=0.35) or(>=0.38)	Uo (>=0.33) (>=0.31)	Ul (>=0.5) "	UWLR (=<3) "	TI (=<20) "	Esl (>=50) "	Esr (>=50) "	Comply with V5
35.00	Normal	1.39	0.56	0.56	.00	10.09	40.28	91.99	NO
35.00	Oncoming	1.43	0.47	0.68	.00	12.25	91.99	40.28	NO
36.00	Normal	1.35	0.55	0.54	.00	10.28	40.27	91.87	NO
36.00	Oncoming	1.40	0.46	0.66	.00	12.48	91.87	40.27	NO
37.00	Normal	1.32	0.53	0.52	.00	10.48	40.05	91.83	NO
37.00	Oncoming	1.36	0.45	0.61	.00	12.74	91.83	40.05	NO
38.00	Normal	1.28	0.52	0.50	.00	10.65	39.98	91.80	NO
38.00	Oncoming	1.32	0.44	0.60	.00	12.96	91.80	39.98	NO
39.00	Normal	1.25	0.51	0.48	.00	10.84	40.00	91.69	NO
39.00	Oncoming	1.29	0.42	0.59	.00	13.19	91.69	40.00	NO
40.00	Normal	1.22	0.49	0.47	.00	11.02	39.94	91.60	NO
40.00	Oncoming	1.26	0.40	0.58	.00	13.42	91.60	39.94	NO
41.00	Normal	1.19	0.47	0.43	.00	11.22	40.01	91.56	NO
41.00	Oncoming	1.23	0.39	0.53	.00	13.69	91.56	40.01	NO
42.00	Normal	1.17	0.45	0.41	.00	11.38	40.21	91.53	NO
42.00	Oncoming	1.20	0.37	0.51	.00	13.89	91.53	40.21	NO
43.00	Normal	1.14	0.44	0.39	.00	11.55	40.41	91.51	NO
43.00	Oncoming	1.17	0.36	0.48	.00	14.11	91.51	40.41	NO
44.00	Normal	1.12	0.43	0.37	.00	11.73	40.40	91.50	NO
44.00	Oncoming	1.15	0.35	0.46	.00	14.33	91.50	40.40	NO
45.00	Normal	1.09	0.41	0.35	.00	11.90	40.42	91.54	NO
45.00	Oncoming	1.12	0.34	0.44	.00	14.55	91.54	40.42	NO

38m DESIGN SPACING COMPLIES WITH CATEGORY V5 WITHIN THE CARRIAGEWAY ONLY. THIS DESIGN DOES NOT COMPLY WITH CATEGORY V5 SURROUND REQUIREMENTS. EXEMPTION FOR NON−COMPLIANCE IS GRANTED BY THE CITY OF RYDE.

NOTES: 1) Where 'Normal' &/or 'Oncoming' lines are shown, compliance with the nominated Category, at a particular spacing, is only applicable when there is a 'Yes' on each line i.e. ANY 'No' indicates failure at that spacing.
2) Calculations use the original SAASTAN software

PleVcat - Vers 5.09 (Built: 10/ 4/13) *Run: 13/ 5/2020 at 16:04:34*

ROAD NO.2 2.25 OVERHANG SINGLE SIDED ARRANGEMENT

CITY OF RYDE
APPROVED FOR CONSTRUCTION
LDA.....
Signed.....
Date.....04 JUN 2021.....
Subject to the Conditions of Development Consent

NOTE: PARKING BAYS DO NOT FORM PART OF THIS ASSESSMENT FOR V CATEGORY LIGHTING. SPACING CHARTS ASSESSMENT AREA BASED ON CARRIAGEWAY WIDTH ONLY.

No.	Description	Drn	Ckd	Date	No.	Description	Drn	Ckd	Date
A	FOR APPROVAL	EW	DT	07.04.20					
B	NOTES ADDED/REVISED	EW	DT	01.05.20					
C	-0.25/-025 SPACING TABLE UPDATED SPACING TABLES ADDED	EW	DT	19.06.20					
D	ROAD No.1 -0.25 SINGLE SIDE DESIGN SPACING INCREASED	EW	DT	20.05.21					

CLIENT: FRASERS PROPERTY

ELECTRICAL CONSULTING ENGINEERS
Shelmerdines Consulting Engineers
ABN 40 003 331 879
55 Hume Street
Crows Nest NSW 2065
Telephone: (02) 9436 3021
Email: mail@shelmerdines.com.au
Web: www.shelmerdines.com.au

PROJECT
IVANHOE ESTATE
MACQUARIE PARK
DETAILED LIGHTING DESIGN
FOR CITY OF RYDE COUNCIL

DRAWING
ELECTRICAL SERVICES
STREET LIGHTING
CALCULATIONS SHEET 1

DATE	SCALE
FEB 2018	AS SHOWN @ A1
DRAWN: EW	CHECKED: DT
DRAWING NUMBER: 6820-ES-314	ISSUE NUMBER: D

Page 1

P Category Lighting - AS/NZS 1158.3.1:2005
****

Shelmerdines

```
I-table Filename: J:\6820\Elec\Lighting Calculations\Gerard Lighting
                   Arterial ATB 2\ATB2_40BLEDE10_XXXXX_R3_4K_5K_133W
                  .cie

        Job Name: 6820 - Ivanhoe Estate - East of Bridge

Luminaire Description: ATB2_40BLEDE10_XXXXX_R3_4K_5K_133W use 1
   Initial Lamp Flux: 16248 lms
  Maintenance Factor: 0.8
         Stores Code:
        Upcast Angle:  0 degrees
         Arrangement: Single Side
     Offset Distance: 4.75 m
Upward Waste Light Ratio: .0 %
        Light Source: LED - Light Emitting Diode
Luminaire Classification: Not specified
```

Lighting Category: P2 (Local Area Roads - Tables 2.1 & 2.6)

```
Illuminance Criteria:  Average Illuminance (Eav) >= 3.50 lx
(Maintained values)     Minimum Illuminance (Eph) >= 0.70 lx
                      Illuminance Uniformity (Up) <= 10
                        Minimum Illuminance (Epv) >= NOT assessed

Calculation Grid: 20 x 11 points - Figure 3.7 of AS/NZS 1158.2
```

Mounting Height	Maximum Spacing for different Road Reserve Widths
10.5	68.9

Value/s in above table are all in metres.
The table contains maximum spacings which, for the specified luminaire and lamp combination, provide compliance with the light technical parameters (LTPs) of Table 2.6 of AS/NZS 1158.3.1:2005.

PlePcat - Vers 3.10 (Built: 10/ 4/13) Run: 5/ 6/2020 at 15:51:09

P2 ROAD NO.1 EAST OF BRIDGE HORIZONTAL CALCS SPACING CHART

Page 1

P Category Lighting - AS/NZS 1158.3.1:2005
****

Shelmerdines

```
I-table Filename: J:\6820\Elec\Lighting Calculations\Gerard Lighting
                   Arterial ATB 2\ATB2_40BLEDE10_XXXXX_R3_4K_5K_133W
                  .cie

        Job Name: 6820 - Ivanhoe Estate - Road No.2

Luminaire Description: ATB2_40BLEDE10_XXXXX_R3_4K_5K_133W use 1
   Initial Lamp Flux: 16248 lms
  Maintenance Factor: 0.8
         Stores Code:
        Upcast Angle:  0 degrees
         Arrangement: Single Side
     Offset Distance: 5.25 m
Upward Waste Light Ratio: .0 %
        Light Source: LED - Light Emitting Diode
Luminaire Classification: Not specified
```

Lighting Category: P2 (Local Area Roads - Tables 2.1 & 2.6)

```
Illuminance Criteria:  Average Illuminance (Eav) >= 3.50 lx
(Maintained values)     Minimum Illuminance (Eph) >= 0.70 lx
                      Illuminance Uniformity (Up) <= 10
                        Minimum Illuminance (Epv) >= NOT assessed

Calculation Grid: 20 x 11 points - Figure 3.7 of AS/NZS 1158.2
```

Mounting Height	Maximum Spacing for different Road Reserve Widths
14.5	60.5

Value/s in above table are all in metres.
The table contains maximum spacings which, for the specified luminaire and lamp combination, provide compliance with the light technical parameters (LTPs) of Table 2.6 of AS/NZS 1158.3.1:2005.

PlePcat - Vers 3.10 (Built: 10/ 4/13) Run: 1/ 5/2020 at 16:43:56

P2 ROAD NO.2 HORIZONTAL CALCS SPACING CHART

NOTE: P2 LIGHTING CATEGORY VERTICAL ILLUMINANCE IS NOT ASSESSED AS PART OF THE PLITE SPACING TABLE. AGI32 HAS BEEN USED TO DEMONSTRATE COMPLIANCE.

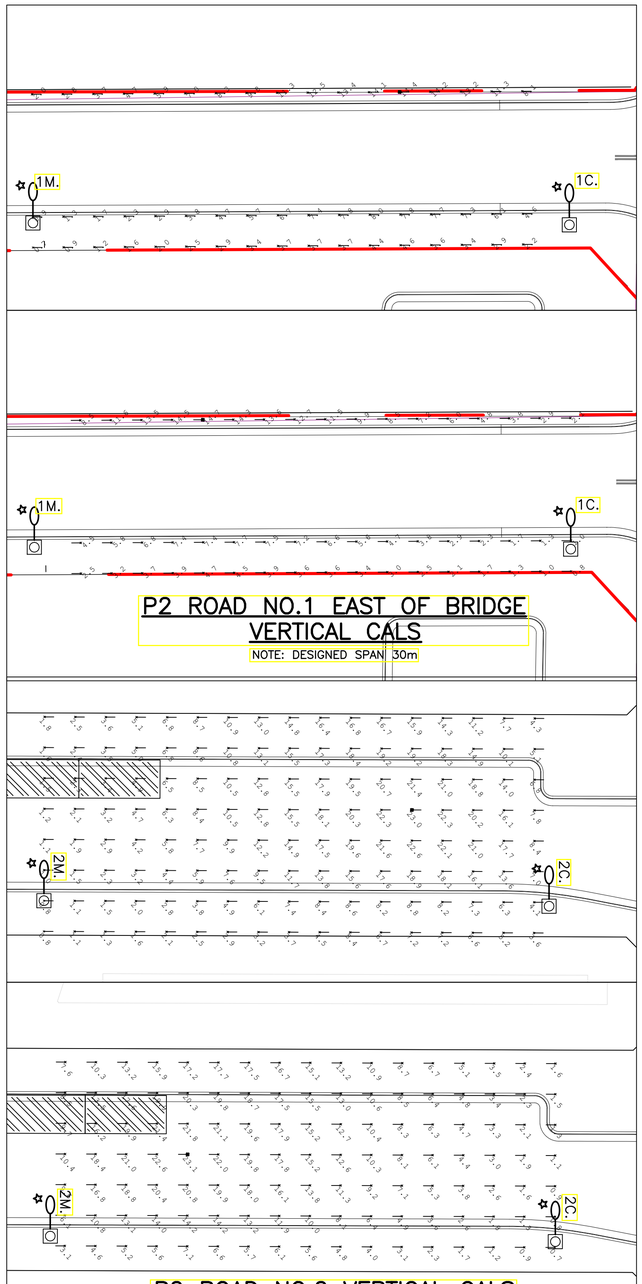

P2 ROAD NO.1 EAST OF BRIDGE VERTICAL CALS

NOTE: DESIGNED SPAN 30m

P2 ROAD NO.2 VERTICAL CALS

NOTE: MAX DESIGNED SPAN 33m

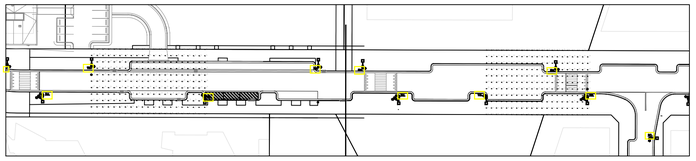

P2 ROAD NO.1 HORIZONTAL CALC

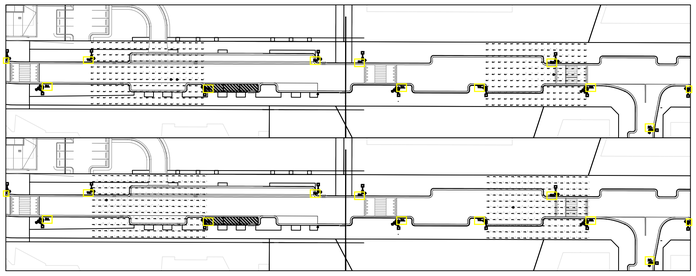

P2 ROAD NO.1 VERTICAL CALC

NOTE: PLITE SPACING CHART CANNOT BE PRODUCED USING STAGGERED ARRANGEMENT. AGI32 HAS BEEN USED TO DETERMINE P2 REQUIREMENTS. RESULTS SHOWN IN THE TABLE BELOW.

CITY OF RYDE
APPROVED FOR CONSTRUCTION
LDA.....
Signed.....
Date..... 04 JUN 2021
Subject to the Conditions of Development Consent

STREET NAME	PERFORMANCE CRITERIA	LIGHTING CATEGORY	AVERAGE HORIZONTAL LIGHT LEVEL (LUX)	MINIMUM HORIZONTAL LIGHT LEVEL (LUX)	ILLUMINANCE HORIZONTAL UNIFORMITY CAT P	POINT VERTICAL ILLUMINANCE (ALONG DIRECTION)	POINT VERTICAL ILLUMINANCE (OPPOSITE DIRECTION)	POINT HORIZONTAL ILLUMINANCE (LUX)	ILLUMINANCE HORIZONTAL UNIFORMITY CAT V
ROAD NO.1 CURVED SECTION 1 CARRIAGEWAY	REQUIRED	V5	N/A	N/A	N/A	N/A	N/A	>=3.5	<=8
ROAD NO.1 CURVED SECTION 1 CARRIAGEWAY	DESIGNED	V5	N/A	N/A	N/A	N/A	N/A	11.7	2.61
ROAD NO.1 CURVED SECTION 1 FOOTPATH	REQUIRED	P2	>=3.5	>=0.7	<=10	>=0.7	>=0.7	N/A	N/A
ROAD NO.1 CURVED SECTION 1 FOOTPATH	DESIGNED	P2	18.3	9.4	1.86	1.2	1.6	N/A	N/A
INTERSECTION 1 CARRIAGEWAY	REQUIRED	V5	N/A	N/A	N/A	N/A	N/A	>=3.5	<=8
INTERSECTION 1 CARRIAGEWAY	DESIGNED	V5	N/A	N/A	N/A	N/A	N/A	14.3	2.37
INTERSECTION 1 FOOTPATH	REQUIRED	P2	>=3.5	>=0.7	<=10	N/A	N/A	N/A	N/A
INTERSECTION 1 FOOTPATH	DESIGNED	P2	10.43	5.2	2.09	N/A	N/A	N/A	N/A
INTERSECTION 2 CARRIAGEWAY	REQUIRED	V5	N/A	N/A	N/A	N/A	N/A	>=3.5	<=8
INTERSECTION 2 CARRIAGEWAY	DESIGNED	V5	N/A	N/A	N/A	N/A	N/A	15.7	2.17
INTERSECTION 2 FOOTPATH	REQUIRED	P2	>=3.5	>=0.7	<=10	N/A	N/A	N/A	N/A
INTERSECTION 2 FOOTPATH	DESIGNED	P2	10.43	5.2	2.09	N/A	N/A	N/A	N/A
ROAD NO.1 CURVED SECTION 2 CARRIAGEWAY	REQUIRED	V5	N/A	N/A	N/A	N/A	N/A	>=3.5	<=8
ROAD NO.1 CURVED SECTION 2 CARRIAGEWAY	DESIGNED	V5	N/A	N/A	N/A	N/A	N/A	10.1	2.45
ROAD NO.1 CURVED SECTION 2 FOOTPATH	REQUIRED	P2	>=3.5	>=0.7	<=10	>=0.7	>=0.7	N/A	N/A
ROAD NO.1 CURVED SECTION 2 FOOTPATH	DESIGNED	P2	10.43	5.2	2.09	0.7	2.0	N/A	N/A
ROAD NO.1 CURVED SECTION 3 CARRIAGEWAY	REQUIRED	V5	N/A	N/A	N/A	N/A	N/A	>=3.5	<=8
ROAD NO.1 CURVED SECTION 3 CARRIAGEWAY	DESIGNED	V5	N/A	N/A	N/A	N/A	N/A	10.1	2.45
ROAD NO.1 CURVED SECTION 3 FOOTPATH	REQUIRED	P2	>=3.5	>=0.7	<=10	>=0.7	>=0.7	N/A	N/A
ROAD NO.1 CURVED SECTION 3 FOOTPATH	DESIGNED	P2	12.83	3.4	1.95	0.7	0.8	N/A	N/A
ROAD NO.2 CORNER 1 CARRIAGEWAY	REQUIRED	V5	N/A	N/A	N/A	N/A	N/A	>=3.5	<=8
ROAD NO.2 CORNER 1 CARRIAGEWAY	DESIGNED	V5	N/A	N/A	N/A	N/A	N/A	14.9	2.68
ROAD NO.2 CORNER 1 FOOTPATH	REQUIRED	P2	>=3.5	>=0.7	<=10	N/A	N/A	N/A	N/A
ROAD NO.2 CORNER 1 FOOTPATH	DESIGNED	P2	17.07	6.5	1.84	N/A	N/A	N/A	N/A
ROAD NO.2 CORNER 2 CARRIAGEWAY	REQUIRED	V5	N/A	N/A	N/A	N/A	N/A	>=3.5	<=8
ROAD NO.2 CORNER 2 CARRIAGEWAY	DESIGNED	V5	N/A	N/A	N/A	N/A	N/A	11.0	3.56
ROAD NO.2 CORNER 2 FOOTPATH	REQUIRED	P2	>=3.5	>=0.7	<=10	N/A	N/A	N/A	N/A
ROAD NO.2 CORNER 2 FOOTPATH	DESIGNED	P2	10.19	3.0	1.59	N/A	N/A	N/A	N/A
BRIDGE CARRIAGEWAY	REQUIRED	V5	N/A	N/A	N/A	N/A	N/A	>=3.5	<=8
BRIDGE CARRIAGEWAY	DESIGNED	V5	N/A	N/A	N/A	N/A	N/A	3.7	2.68

V5 AND P2 LIGHTING CALCULATION FOR INTERSECTIONS AND OTHER SPECIFIC AREAS

ROAD NO.1		
LUMINAIRE OUTPUT %	V CATEGORY COMPLIANCE	P CATEGORY COMPLIANCE
100	V3	P2
80	V3	P3
60	V4	P3
40	V5	P3
20	N/A	N/A

LUMINAIRE OUTPUT % IS BASED ON AN INITIAL MAINTENANCE FACTOR OF 0.8 LLF

ROAD NO.1 PAST EAST BRIDGE		
LUMINAIRE OUTPUT %	V CATEGORY COMPLIANCE	P CATEGORY COMPLIANCE
100	V5	P2
80	N/A	P2
60	N/A	P3
40	N/A	P3
20	N/A	N/A

LUMINAIRE OUTPUT % IS BASED ON AN INITIAL MAINTENANCE FACTOR OF 0.8 LLF

ROAD NO.2		
LUMINAIRE OUTPUT %	V CATEGORY COMPLIANCE	P CATEGORY COMPLIANCE
100	V3	P2
80	V4	P3
60	V4	P3
40	N/A	P3
20	N/A	N/A

LUMINAIRE OUTPUT % IS BASED ON AN INITIAL MAINTENANCE FACTOR OF 0.8 LLF

No.	Description	Drn	Ckd	Date	No.	Description	Drn	Ckd	Date
A	FOR APPROVAL	EW	DT	07.04.20					
B	CALC RESULTS REVISED	EW	DT	04.05.20					
C	SPACING TABLE CORRECTED & MINOR UPDATES	EW	DT	05.06.20					
D	CALC RESULTS REVISED	EW	DT	20.05.21					
E	BRIDGE CARRIAGEWAY CALC RESULTS ADDED TO TABLE	EW	DT	01.06.21					

CLIENT: FRASERS PROPERTY

ELECTRICAL CONSULTING ENGINEERS
Shelmerdines Consulting Engineers
ABN 40 003 331 879
55 Hume Street
Crows Nest NSW 2065
Telephone: (02) 9436 3021
Email: mail@shelmerdines.com.au
Web: www.shelmerdines.com.au

PROJECT
IVANHOE ESTATE
MACQUARIE PARK
DETAILED LIGHTING DESIGN
FOR CITY OF RYDE COUNCIL

DRAWING
ELECTRICAL SERVICES
STREET LIGHTING
CALCULATIONS SHEET 2

DATE	SCALE
FEB 2018	AS SHOWN @ A1
DRAWN: EW	CHECKED: DT
DRAWING NUMBER: 6820-ES-315	ISSUE NUMBER: E

Shelmerdines
Consulting Engineers

20 May 2021
EW: 6820_DC.3

City of Ryde
Locked Bag 2069
NORTH RYDE NSW 1670

Attention: **Ms Margie Azmi**

IVANHOE ESTATE CNR OF EPPING AND HERRING RD, MACQUARIE PARK
STREET LIGHTING DESIGN

We confirm the lighting design detailed within drawing no.'s 6820-ES-301 through 6820-ES-317 for the above project has been designed to meet the following lighting standards and inclusive of City of Ryde Council's lighting guidelines for all public roads within the above development:

- Category V5 of AS/NZS 1158 Lighting for roads and public spaces.
  Part 1.1 Vehicular Traffic (Category V) Lighting-Performance and design requirements
- Category P2 of AS/NZS 1158 Lighting for roads and public spaces
  Part 3.1 Pedestrian Area (Category P) Lighting-Performance and design requirements
- Category PX2 of AS/NZS 1158Lighting for roads and public spaces
  Part 4 Lighting of Pedestrian Crossings

.
Shelmerdines Consulting Engineers possess appropriate Professional Indemnity Insurance.

Full Name of Designer: Elbert Wang
Qualifications: B.E. Elec
Address of Designer: 55 Hume Street, Crows Nest
Business Telephone No: 9436 3021
Name of Employer: Shelmerdines Consulting Engineers

Yours faithfully
SHELMERDINES

Elbert Wang

E. Shelmerdine & Partners Engineering Pty Ltd
ABN 40 003 331 879

Email: mail@shelmerdines.com.au
Web: www.shelmerdines.com.au

55 Hume Street
Crows Nest NSW 2065
Phone: 02 9436 3021

PO Box 1345
Crows Nest NSW 1585

Directors
P.W. Matthews
D.A. Taylor
K.F. Murray

Associates
D.J. Powell
J.R. Lee
J. Aye
S. Gomes
D.J. Rossington

CELEBRATING 40+ YEARS

CITY OF RYDE
APPROVED FOR CONSTRUCTION
LDA.....
Signed.....
Date 04 JUN 2021
Subject to the Conditions of Development Consent

No.	Description	Drn	Ckd	Date
A	FOR APPROVAL	EW	DT	07.04.20
B	CERTIFICATION LETTER UPDATED	EW	DT	07.04.20

No.	Description	Drn	Ckd	Date

CLIENT: FRASERS PROPERTY

ELECTRICAL CONSULTING ENGINEERS
Shelmerdines Consulting Engineers
ABN 40 003 331 879
55 Hume Street
Crows Nest NSW 2065
Telephone: (02) 9436 3021
Email: mail@shelmerdines.com.au
Web: www.shelmerdines.com.au

PROJECT
IVANHOE ESTATE
MACQUARIE PARK
DETAILED LIGHTING DESIGN
FOR CITY OF RYDE COUNCIL

DRAWING
ELECTRICAL SERVICES
DESIGN CERTIFICATE

DATE	SCALE
FEB 2018	AS SHOWN @ A1
DRAWN: EW	CHECKED: DT
DRAWING NUMBER: 6820-ES-316	ISSUE NUMBER: B

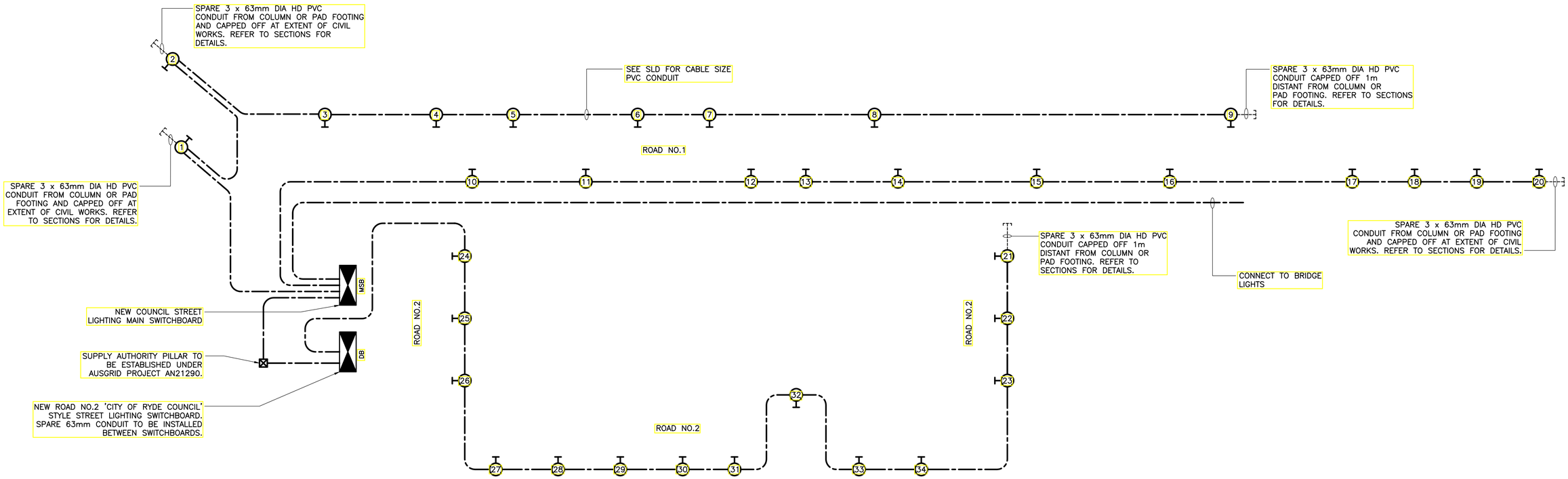

CIRCUIT DIAGRAM

NOT TO SCALE

CITY OF RYDE
APPROVED FOR CONSTRUCTION
LDA.....
Signed.....
Date 04 JUN 2021
Subject to the Conditions of Development Consent

No.	Description	Drn	Ckd	Date	No.	Description	Drn	Ckd	Date
A	FOR APPROVAL	EW	DT	01.05.20					
B	CIRCUITS REDUCED	EW	DT	11.06.20					
C	ADDITIONAL DB ADDED	EW	DT	20.05.21					

CLIENT: FRASERS PROPERTY

ELECTRICAL CONSULTING ENGINEERS
Shelmerdines Consulting Engineers
ABN 40 003 331 879
55 Hume Street
Crows Nest NSW 2065
Telephone: (02) 9436 3021
Email: mail@shelmerdines.com.au
Web: www.shelmerdines.com.au

PROJECT
IVANHOE ESTATE
MACQUARIE PARK
DETAILED LIGHTING DESIGN
FOR CITY OF RYDE COUNCIL

DRAWING
ELECTRICAL SERVICES
CIRCUIT DIAGRAM

DATE	SCALE
FEB 2018	AS SHOWN @ A1
DRAWN: EW	CHECKED: DT
DRAWING NUMBER: 6820-ES-317	ISSUE NUMBER: C

DIAL BEFORE YOU DIG
www.1100.com.au

City of Ryde

PUBLIC LIGHTING DESIGN
IVANHOE ESTATE
MACQUARIE PARK

DETAILED BRIDGE LIGHTING DESIGN
SSDA - 8903

LOCATION
OF WORKS

SHEET INDEX

SHEET NUMBER	DESCRIPTION	REV
6820-ES-401	COVER SHEET	B
6820-ES-402	LEGEND AND DETAILS	B
6820-ES-403	BRIDGE PLAN AND SECTIONS	C

NOTE: REFER TO DETAILED LIGHTING DESIGN DRAWINGS 6820-ES-301 TO 6820-ES-317 INCLUSIVE FOR CONTINUATION OF THIS DESIGN.

CITY OF RYDE
APPROVED FOR CONSTRUCTION
LDA.....
Signed.....
Date.....01 OCT 2021.....
Subject to the Conditions of Development Consent

No.	Description	Drn	Ckd	Date
A	FOR APPROVAL	DT	DT	29.07.21
B	REVISED SUBMISSION	DT	DT	17.09.21

No.	Description	Drn	Ckd	Date

CLIENT: FRASERS PROPERTY

ELECTRICAL CONSULTING ENGINEERS
Shelmerdines Consulting Engineers
ABN 40 003 331 879
55 Hume Street
Crows Nest NSW 2065
Telephone: (02) 9436 3021
Email: mail@shelmerdines.com.au
Web: www.shelmerdines.com.au

PROJECT: IVANHOE ESTATE MACQUAIRE PARK NSW BRIDGE LIGHTING DESIGN

DRAWING: ELECTRICAL SERVICES COVER SHEET

DATE	SCALE
JULY 2021	NTS @ A1
DRAWN: DT	CHECKED: DT
DRAWING NUMBER: 6820-ES-401	ISSUE NUMBER: B

LEGEND:

NEW PVC CONDUITS/TRENCH

SL — NEW STREET LIGHTING CIRCUIT

LED — iGUZZINI E493 LED STRIP LIGHT MOUNTED WITHIN THE X155 LINEAR PROFILE. LED SHALL BE WARM WHITE AND SUPPLIED IN 7m LENGTHS SUITABLE FOR A CONTINUOUS LED STRIP ALONG THE BRIDGE HAND RAILS

LEDx2 — iGUZZINI E577 LED STRIP LIGHTS MOUNTED WITHIN THE X155 LINEAR PROFILE. LED STRIPS SHALL BE WARM WHITE AND SUPPLIED IN 7m LENGTHS SUITABLE FOR CONTINUOUS LED STRIPS WITHIN THE BRIDGE BALUSTRADE. ONE STRIP MOUNTED TO THE TOP AND ONE TO THE BOTTOM AS PER THE SECTIONS

1x40 ← 1x50

CONDUITS EMBEDDED INTO BRIDGE FOR STREET LIGHTING CIRCUIT

PSU — SIX (6) POWER SUPPLY UNITS INSIDE IP66 WIRING BOXES.
UNITS SHALL BE:–
- X186 – iGUZZINI CONSTANT VOLTAGE NON–DIMMING POWER SUPPLY UNIT
- X653– iGUZZINI IP66 WIRING BOX FOR INSTALLATION OF THE POWER SUPPLY UNIT WITHIN

LIGHTING DESIGN

1. ALL LUMINAIRES TO BE INSTALLED IN ACCORDANCE WITH THE MANUFACTURERS REQUIREMENT AND SPECIFICATIONS.
2. LIGHTING EQUIPMENT, LOCATION AND TYPES MAY NOT BE SUBSTITUTED WITHOUT PRIOR CONSENT AND APPROVAL OF THE DESIGNER. REFER IMAGE OF PROPOSED LUMINAIRES AND EQUIPMENT.
3. COLOUR/FINISH OF ALL LIGHT FITTINGS, TRIMS, LENSES AND ACCESSORIES TO BE APPROVED BY THE COUNCIL. CONTRACTOR SHALL PROVIDE SAMPLES OF LIGHT FITTINGS PRIOR TO PROCUREMENT.
4. REFER TO LIGHTING DESIGN BY iGUZZINI FOR LIGHTING COMPLIANCE ON THE BRIDGE DECK.

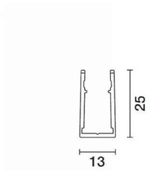

ALUMINIUM LINEAR
iGUZZINI X577 INTERMEDIATE LINEAR PROFILE

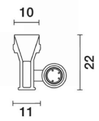

PROPOSED LUMINAIRE
iGUZZINI E577 LED STRIP LIGHT – BACKLIGHT PANELS IN BALUSTRADE
iGUZZINI E493 LED STRIP LIGHT – HANDRAILS

CONSTANT VOLTAGE POWER SUPPLY UNIT
iGUZZINI X186 POWER SUPPLY UNIT

IP66 WIRING BOX – DIM 378x188x130H
iGUZZINI X653 IP66 WIRING BOX

DIAL BEFORE YOU DIG
www.1100.com.au

CITY OF RYDE
APPROVED FOR CONSTRUCTION
LDA.....
Signed.....
Date.....01 OCT 2021.....
Subject to the Conditions of Development Consent

No.	Description	Drn	Ckd	Date	No.	Description	Drn	Ckd	Date
A	FOR APPROVAL	DT	DT	29.07.21					
B	REVISED SUBMISSION	DT	DT	17.09.21					

CLIENT: FRASERS PROPERTY

ELECTRICAL CONSULTING ENGINEERS
Shelmerdines Consulting Engineers
ABN 40 003 331 879
55 Hume Street
Crows Nest NSW 2065
Telephone: (02) 9436 3021
Email: mail@shelmerdines.com.au
Web: www.shelmerdines.com.au

PROJECT
IVANHOE ESTATE
MACQUARIE PARK
DETAILED LIGHTING DESIGN
FOR CITY OF RYDE COUNCIL

DRAWING
ELECTRICAL SERVICES
LEGEND AND DETAILS

DATE	SCALE
JULY 2021	NTS @ A1
DRAWN: DT	CHECKED: DT
DRAWING NUMBER: 6820-ES-402	ISSUE NUMBER: B

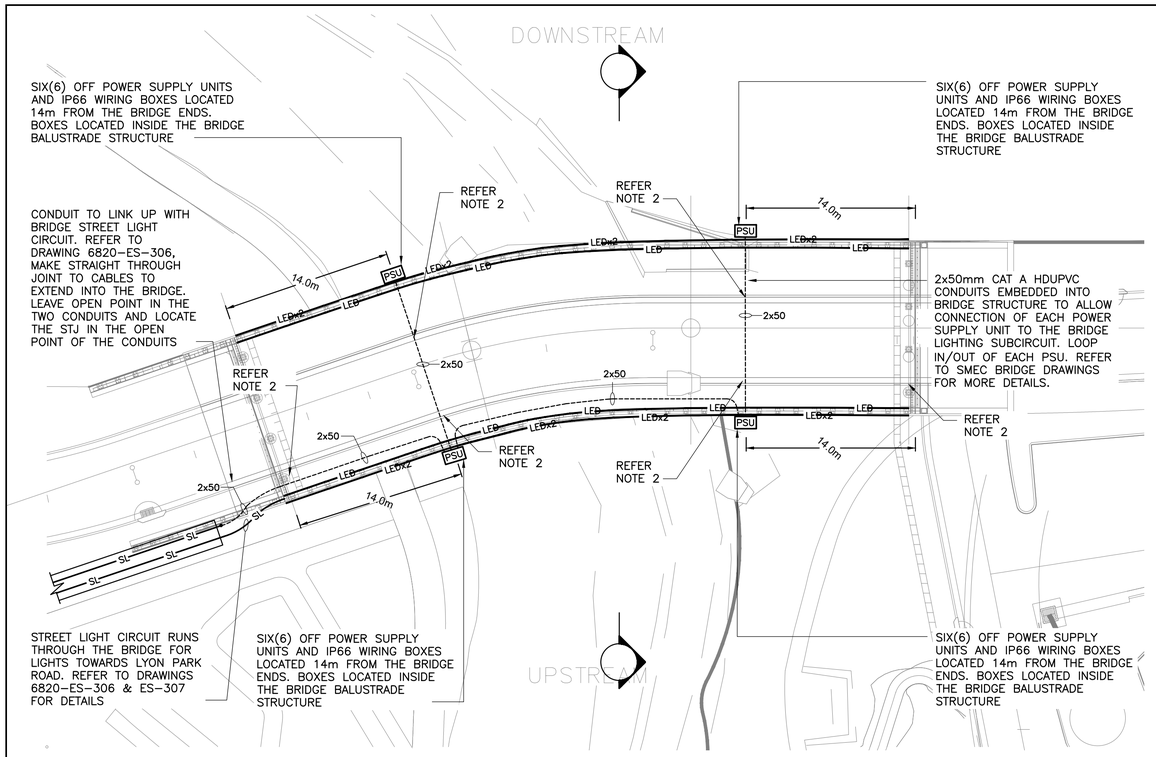

BRIDGE PLAN

SCALE 1:250

NOTES:

1. FOR LEGEND REFER TO DRAWING No. 6820-ES-402.
2. INSTALL DANGER ELECTRICAL CABLE MARKER AT THIS LOCATION ON CURB FACE.

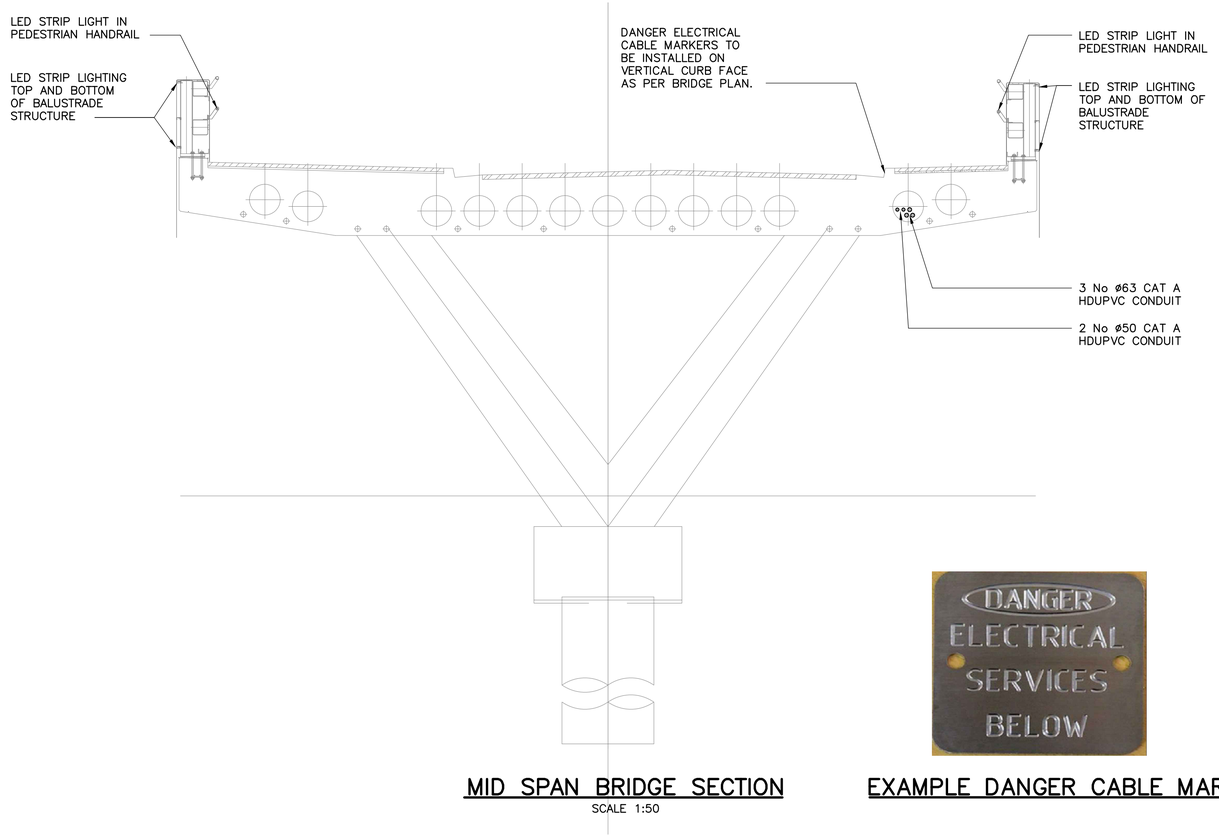

MID SPAN BRIDGE SECTION

SCALE 1:50

EXAMPLE DANGER CABLE MARKERS

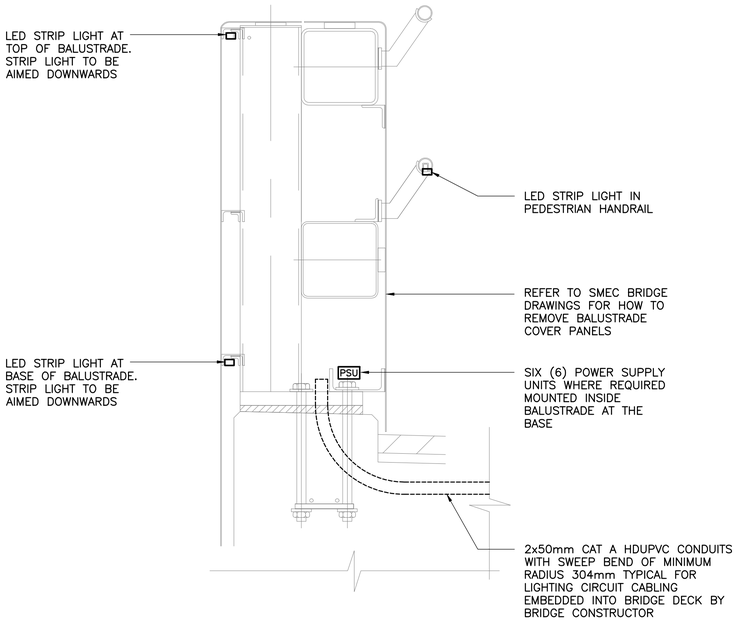

TYPICAL BALUSTRADE DETAIL

SCALE 1:10

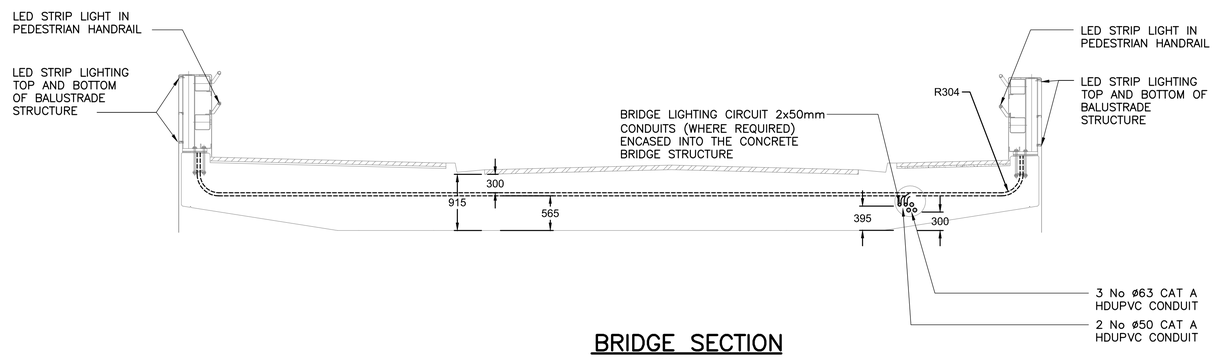

BRIDGE SECTION

SCALE 1:50

CITY OF RYDE
APPROVED FOR CONSTRUCTION
LDA.....
Signed.....
Date 01 OCT 2021
Subject to the Conditions of Development Consent

No.	Description	Drn	Chd	Date
A	FOR APPROVAL	DT	DT	29.07.21
B	REVISED SUBMISSION	DT	DT	26.08.21
C	REVISED SUBMISSION	DT	DT	17.09.21

No.	Description	Drn	Chd	Date

CLIENT: FRASERS PROPERTY

ELECTRICAL CONSULTING ENGINEERS
Shelmerdines Consulting Engineers
ABN 40 003 331 879
55 Hume Street
Crows Nest NSW 2065
Telephone: (02) 9436 3021
Email: mail@shelmerdines.com.au
Web: www.shelmerdines.com.au

PROJECT
IVANHOE ESTATE
MACQUARIE PARK
DETAILED LIGHTING DESIGN
FOR CITY OF RYDE COUNCIL

DRAWING
ELECTRICAL SERVICES
BRIDGE PLAN AND SECTIONS

DATE	SCALE
JULY 2021	AS SHOWN @ A1
DRAWN: DT	CHECKED: DT
DRAWING NUMBER: 6820-ES-403	ISSUE NUMBER: C

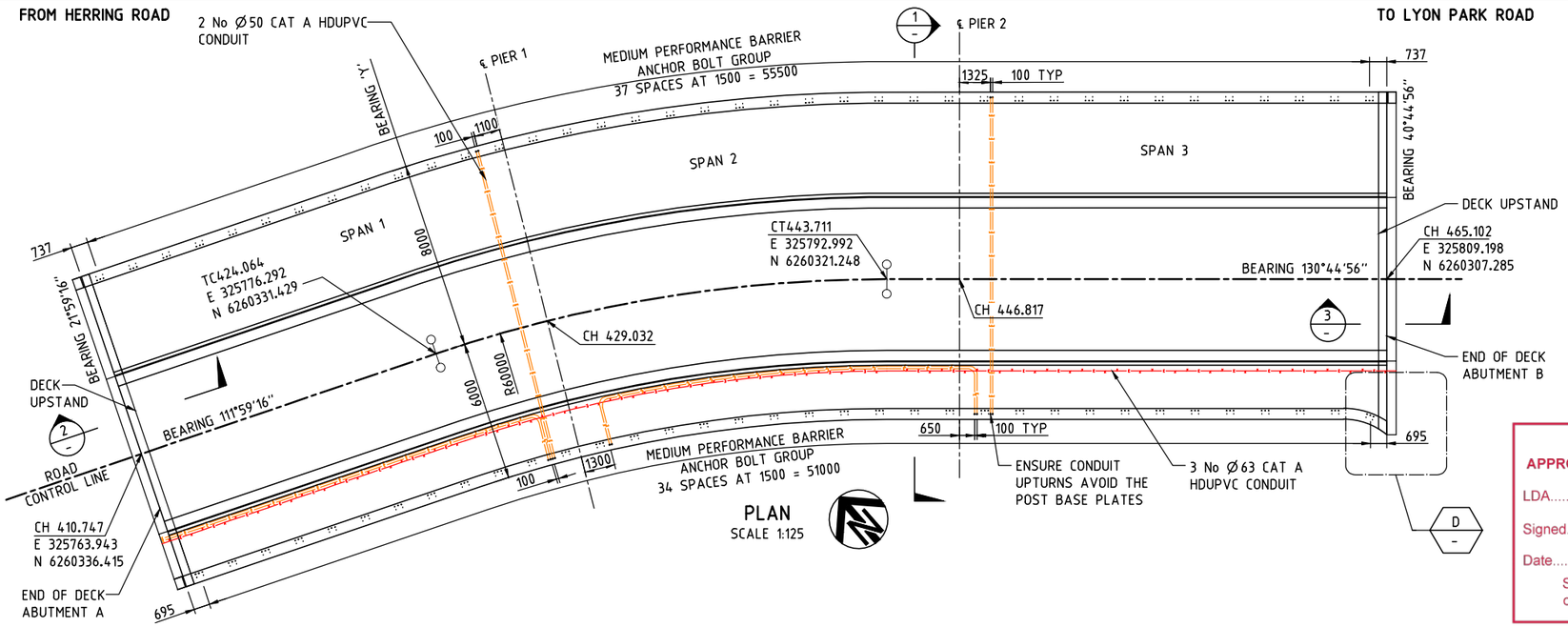

PLAN
SCALE 1:125

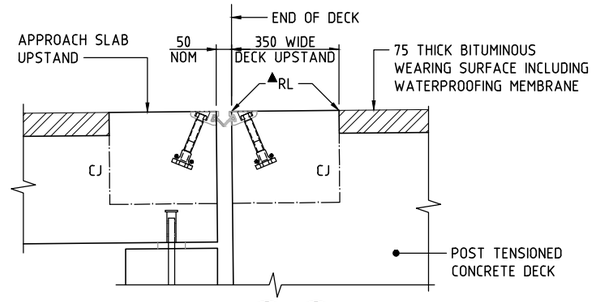

SECTION 2/- 3/- SIMILAR BUT TO OPPOSITE HAND
SCALE 1:10

FOR ▲ RL'S REFER TABLES 1
FOR EXPANSION JOINT DETAILS, REFER DRG No 201

CITY OF RYDE
APPROVED FOR CONSTRUCTION
LDA.....
Signed.....
Date 01 OCT 2021
Subject to the Conditions of Development Consent

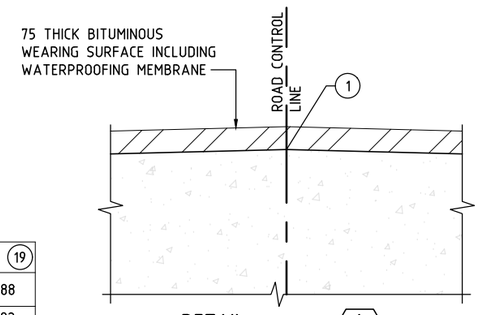

DETAIL A
SCALE 1:10

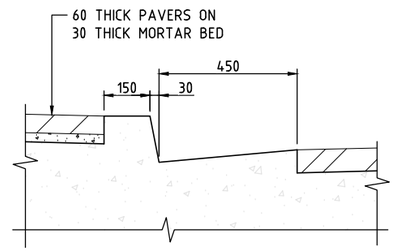

DETAIL B/- C/- SIMILAR BUT TO OPPOSITE HAND
SCALE 1:10

TABLE 1 - DECK SETTING OUT

LOCATION	STATION	BEARING 'Y'	POINT 1	POINT 2	POINT 3	POINT 4	POINT 5	POINT 6	POINT 7	POINT 8	POINT 9	POINT 10	POINT 11	POINT 12	POINT 13	POINT 14	POINT 15	POINT 16	POINT 17	POINT 18	POINT 19
END OF DECK AT ABUTMENT A	410.747	21°59'16"	▲46.729	▲46.653	▲46.653	▲46.613	▲46.763	▲46.762	▲46.762	▲46.863	▲46.928	▲46.938	▲46.653	▲46.653	▲46.613	▲46.763	▲46.762	▲46.762	▲46.813	▲46.878	▲46.888
UPSTAND	411.097	21°59'16"	▲46.732	▲46.656	▲46.656	▲46.616	▲46.766	▲46.766	▲46.766	▲46.867	▲46.932	▲46.942	▲46.656	▲46.656	▲46.616	▲46.766	▲46.766	▲46.766	▲46.817	▲46.882	▲46.892
SPAN 1	420.000	21°59'16"	46.741	46.664	46.739	46.699	46.849	46.849	46.759	46.860	47.015	47.025	46.664	46.739	46.699	46.849	46.849	46.759	46.810	46.965	46.975
	424.064	21°59'16"	46.779	46.702	46.777	46.737	46.887	46.887	46.797	46.898	47.053	47.063	46.702	46.777	46.737	46.887	46.887	46.797	46.847	47.003	47.013
℄ PIER 1	429.032	26°43'54"	46.825	46.749	46.824	46.784	46.934	46.933	46.843	46.944	47.099	47.109	46.749	46.824	46.784	46.934	46.933	46.843	46.894	47.049	47.059
SPAN 2	440.000	37°12'19"	46.928	46.851	46.926	46.886	47.036	47.036	46.946	47.047	47.202	47.212	46.851	46.926	46.886	47.036	47.036	46.946	46.997	47.152	47.162
	443.711	40°44'56"	46.962	46.886	46.961	46.921	47.071	47.070	46.980	47.081	47.236	47.246	46.886	46.961	46.921	47.071	47.070	46.980	47.031	47.186	47.196
℄ PIER 2	446.817	40°44'56"	46.991	46.915	46.990	46.950	47.100	47.100	47.010	47.111	47.266	47.276	46.915	46.990	46.950	47.100	47.100	47.010	47.061	47.216	47.226
SPAN 3	450.000	40°44'56"	47.021	46.945	47.020	46.980	47.130	47.129	47.039	47.140	47.295	47.305	46.945	47.020	46.980	47.130	47.129	47.039	47.090	47.245	47.255
	460.000	40°44'56"	47.115	47.038	47.113	47.073	47.223	47.223	47.133	47.234	47.389	47.399	47.038	47.113	47.073	47.223	47.223	47.133	47.184	47.339	47.349
	463.258	40°44'56"	47.145	47.068	47.143	47.103	47.253	47.253	47.163	47.264	47.419	47.429	47.068	47.143	47.103	47.253	47.253	47.163	47.214	47.369	47.379
UPSTAND	464.752	40°44'56"	▲47.234	▲47.158	▲47.158	▲47.118	▲47.268	▲47.267	▲47.267	▲47.368	▲47.433	▲47.443	▲47.158	▲47.158	▲47.118	▲47.268	▲47.267	▲47.267	▲47.326	▲47.391	▲47.403
END OF DECK AT ABUTMENT B	465.102	40°44'56"	▲47.237	▲47.161	▲47.161	▲47.121	▲47.271	▲47.270	▲47.270	▲47.371	▲47.436	▲47.446	▲47.161	▲47.161	▲47.121	▲47.271	▲47.270	▲47.270	▲47.334	▲47.399	▲47.412

▲ DENOTES RL's AT END OF DECK AND UPSTAND AS SHOWN IN SECTION 2 AND 3.
END OF DECK AND UPSTAND RL's SHOWN MAKE NO ALLOWANCE FOR COVER PLATE RECESSES WHERE APPLICABLE.

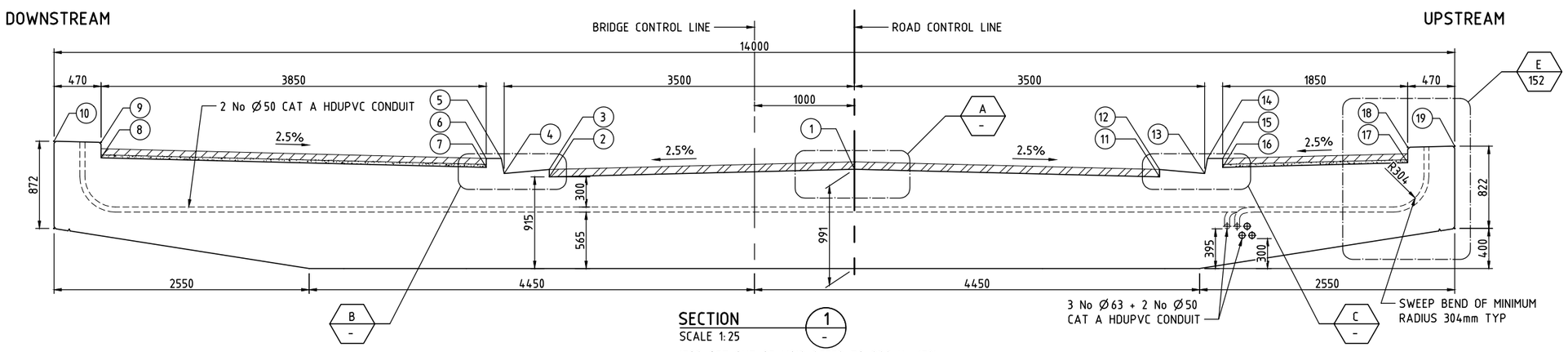

SECTION 1/-
SCALE 1:25
(FOR SET OUT OF VOID REFER TO DRG No 152)

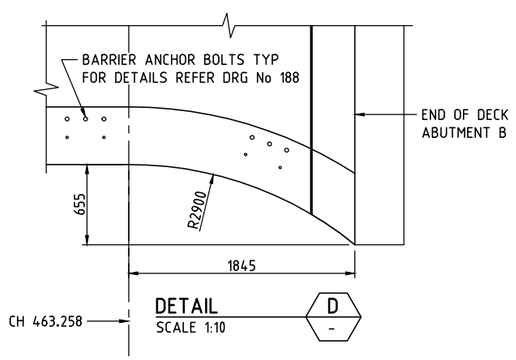

DETAIL D/-
SCALE 1:10

DRAWING FILE LOCATION / NAME	PLOT DATE	TIME
V:_Vault\Projects\3001\30013046\110_CADD\CAD\DWG\30013046-151.dwg	15 Sep 2021	11:08:37

EXTERNAL REFERENCE FILES: X_30013046_SMEC_A1, X_BRG_PLAN, X_DES_MAIN, X_BRG_SEC

REV	DATE	AMENDMENT / REVISION DESCRIPTION	WVR No.	APPROVAL
01	10.07.2021	ISSUED FOR TENDER	001	JD
02	20.08.2021	ISSUED FOR TENDER	001	JD

TITLE	NAME
DRAFTER	T.SABAPATHI
DRAFTING CHECK	V.S.KODURU
DESIGNER	V.S.KODURU
DESIGN CHECK	V.BALAKRISHNAN
PROJECT MANAGER	J.DICKERSON
PROJECT DIRECTOR	K.LUU

SCALES AT A1 SIZE DRAWING: 0 2500 5000mm; 1250 625; 1:125

DESIGNER: SMEC
Member of the Surbana Jurong Group
© ABN 47 065 475 149
LEVEL 5, 20 BERRY STREET
NORTH SYDNEY NSW 2060
SMEC PROJECT No 30013046

CLIENT: FRASERS PROPERTY

PROJECT TITLE: SHRIMPTON CREEK BRIDGE
DECK SETTING OUT

SCALE	PHASE	PROJECT / DRAWING No.	REVISION
AS NOTED	TENDER	30013046-151	02.1

150 mm ON ORIGINAL
A1

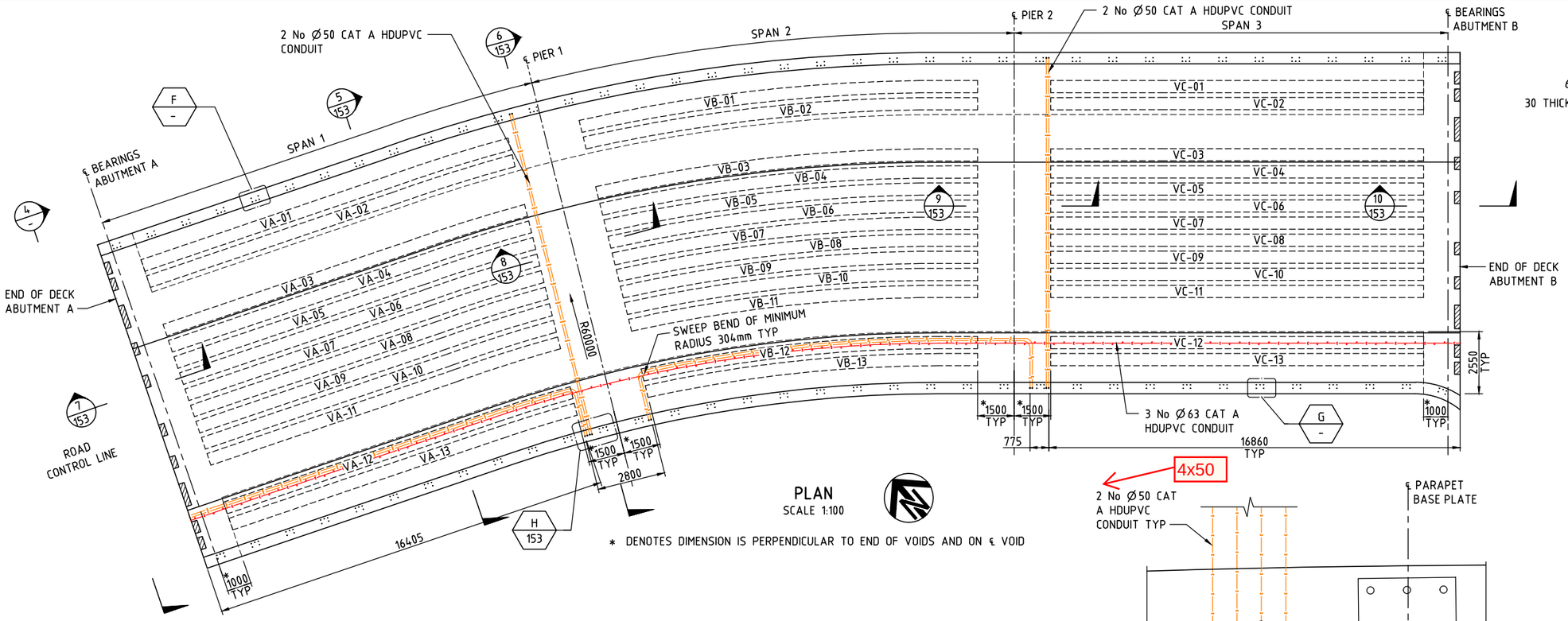

PLAN
SCALE 1:100

* DENOTES DIMENSION IS PERPENDICULAR TO END OF VOIDS AND ON ℄ VOID

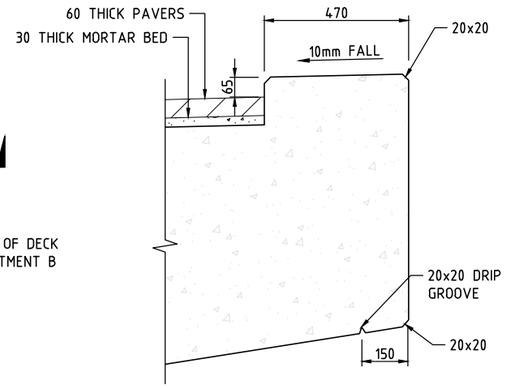

DETAIL E
SCALE 1:10

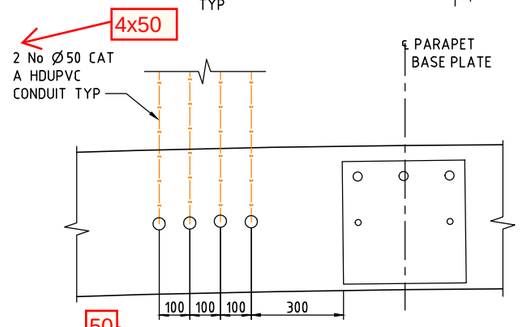

DETAIL (Ø40 ELECTRICAL DUCT) H
SCALE 1:10

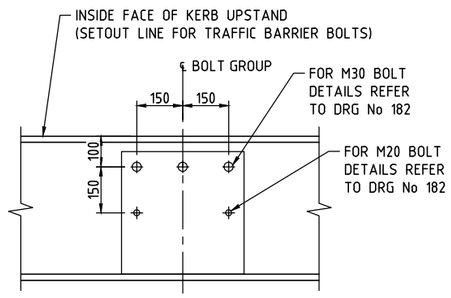

DETAIL F G SIMILAR BUT TO OPPOSITE HAND
SCALE 1:10

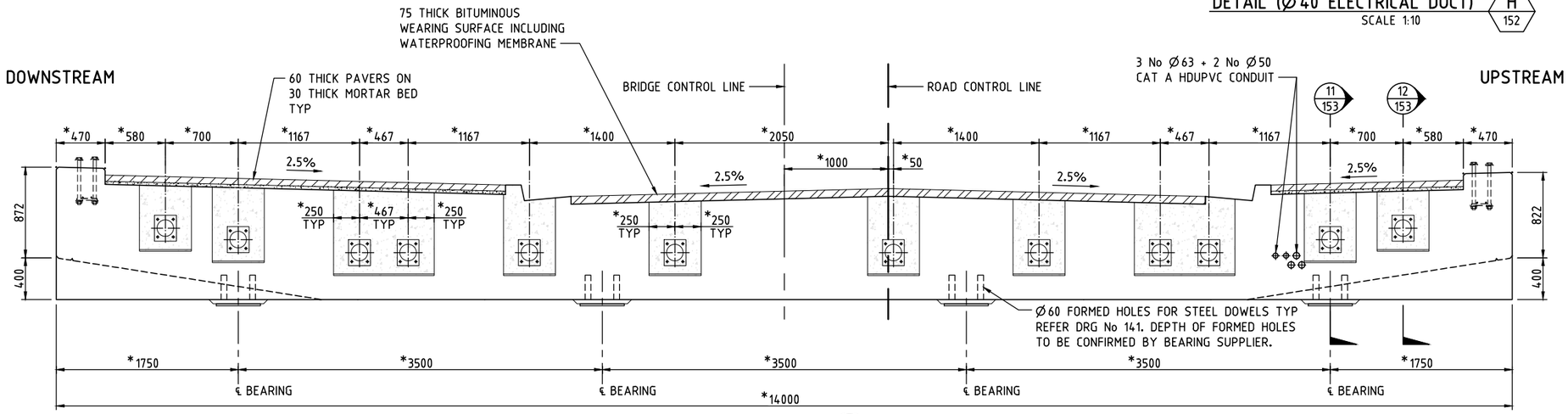

SECTION 4
SCALE 1:25

* DENOTES DIMENSION ARE OFFSETS ALONG ABUTMENT CENTERLINES
FOR POST TENSION LAYOUT REFER TO DRG No 161

'-' DENOTES STRAIGHT LINE

CITY OF RYDE
APPROVED FOR CONSTRUCTION
LDA.....
Signed.....
Date 01 OCT 2021
Subject to the Conditions of Development Consent

GENERAL NOTES

ALL DIMENSIONS ARE IN MILLIMETRES UNLESS NOTED OTHERWISE.
CONCRETE EXPOSURE CLASSIFICATION: B1
MINIMUM 28 DAY COMPRESSIVE STRENGTH OF CONCRETE SHALL BE 40 MPa
EDGES SHALL BE CHAMFERED 20 x 20 AND RE-ENTRANT ANGLES FILLETED 20 x 20 UNLESS NOTED OTHERWISE.
CONSTRUCTION JOINT ONLY AT THE LOCATIONS NOMINATED ON THE DRAWINGS.
REFER TO TABLE 1 FOR SETTING OUT DETAILS.
ALL REDUCE LEVELS SHOWN ARE TO DESIGN FINISHED CONCRETE LEVELS.
THE CONTRACTOR SHALL ALLOW FOR SETTLEMENT OF FALSEWORK DURING CONSTRUCTION.
EXPOSED CONCRETE SURFACE TO HAVE SMOOTH FINISH.

DRAWING FILE LOCATION / NAME: V:_Vault\Projects\3001\30013046\110_CADD\CAD\DWG\30013046-152.dwg
PLOT DATE: 15 Sep 2021 TIME: 11:09:03

EXTERNAL REFERENCE FILES: X_30013046_SMEC_A1, X_BRG_PLAN, X_BRG_SEC

REV	DATE	AMENDMENT / REVISION DESCRIPTION	WVR No.	APPROVAL
01	10.07.2021	ISSUED FOR TENDER	001	JD
02	20.08.2021	ISSUED FOR TENDER	001	JD

TITLE	NAME
DRAFTER	T.SABAPATHI
DRAFTING CHECK	V.S.KODURU
DESIGNER	V.S.KODURU
DESIGN CHECK	V.BALAKRISHNAN
PROJECT MANAGER	J.DICKERSON
PROJECT DIRECTOR	K.LUU

SCALES AT A1 SIZE DRAWING: 0 1000 2000 3000 4000 5000mm; 1000 500; 1:100

DESIGNER: SMEC
Member of the Surbana Jurong Group
© ABN 47 065 475 149
LEVEL 5, 20 BERRY STREET
NORTH SYDNEY NSW 2060
SMEC PROJECT No 30013046

CLIENT: FRASERS PROPERTY

PROJECT TITLE: SHRIMPTON CREEK BRIDGE
DECK CONCRETE
SHEET A

SCALE	PHASE	PROJECT / DRAWING No.	REVISION
AS NOTED	TENDER	30013046-152	02.1

150 mm ON ORIGINAL
A1

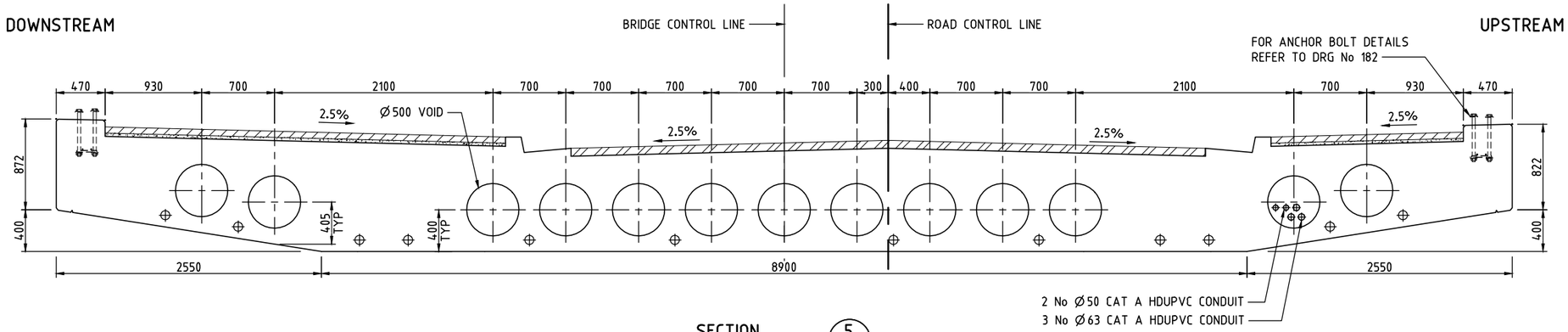

SECTION 5/152
SCALE 1:25

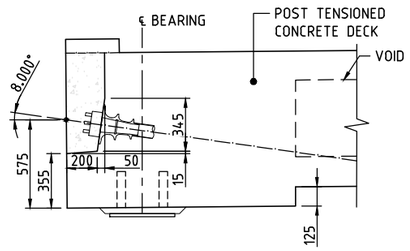

SECTION 11/152
SCALE 1:20

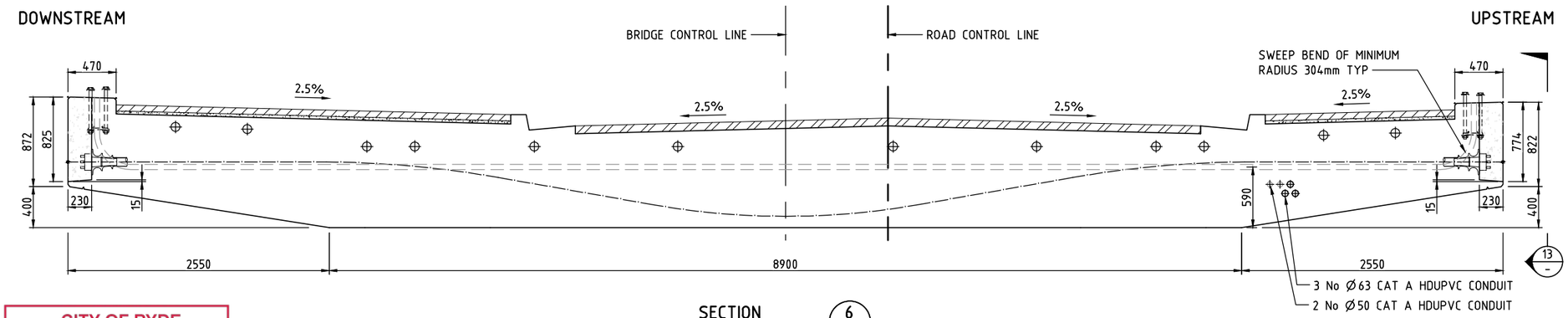

SECTION 6/152
SCALE 1:25

FOR POST TENSION LAYOUT REFER TO DRG No 161.

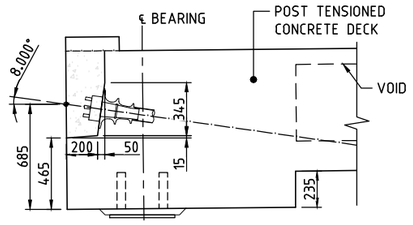

SECTION 12/152
SCALE 1:20

CITY OF RYDE
APPROVED FOR CONSTRUCTION
LDA.....
Signed.....
Date.....01 OCT 2021
Subject to the Conditions
of Development Consent

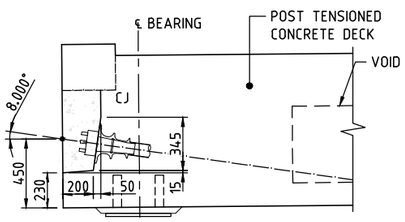

SECTION 7/152 10/152 SIMILAR BUT TO OPPOSITE HAND
SCALE 1:20

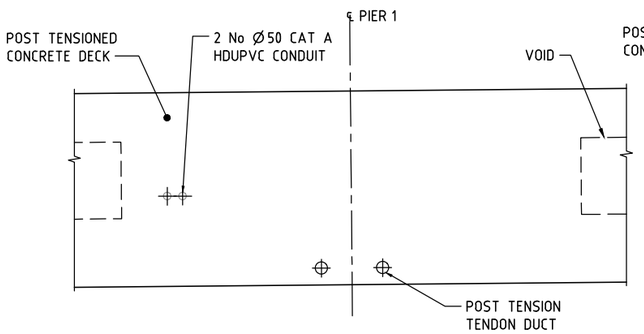

VIEW 8/152
SCALE 1:20

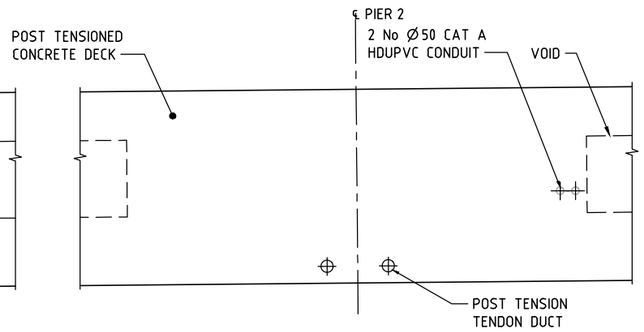

VIEW 9/152
SCALE 1:20

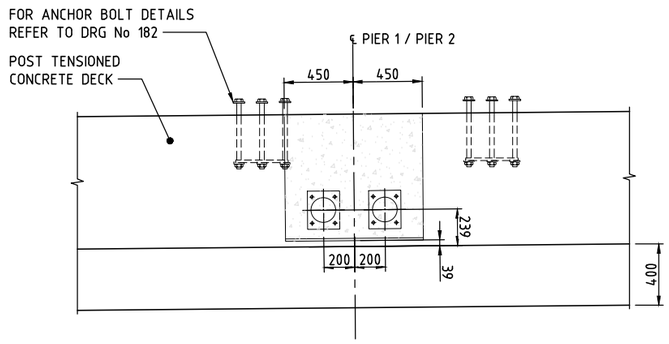

VIEW 13/153
SCALE 1:20

DRAWING FILE LOCATION / NAME	PLOT DATE	TIME
V:_Vault\Projects\3001\30013046\110_CADD\CAD\DWG\30013046-153.dwg	15 Sep 2021	11:09:30

EXTERNAL REFERENCE FILES: X_30013046_SMEC_A1, X_BRG_SEC, X_BRG_PLAN

REV	DATE	AMENDMENT / REVISION DESCRIPTION	WVR No.	APPROVAL
01	10.07.2021	ISSUED FOR TENDER	001	JD
02	20.08.2021	ISSUED FOR TENDER	001	JD

TITLE	NAME
DRAFTER	T.SABAPATHI
DRAFTING CHECK	V.S.KODURU
DESIGNER	V.S.KODURU
DESIGN CHECK	V.BALAKRISHNAN
PROJECT MANAGER	J.DICKERSON
PROJECT DIRECTOR	K.LUU

SCALES AT A1 SIZE DRAWING: 0 500 1000mm; 250 125 1:25

DESIGNER: SMEC
Member of the Surbana Jurong Group
© ABN 47 065 475 149
LEVEL 5, 20 BERRY STREET
NORTH SYDNEY NSW 2060
SMEC PROJECT No 30013046

CLIENT: FRASERS PROPERTY

PROJECT TITLE: SHRIMPTON CREEK BRIDGE
DECK CONCRETE
SHEET B

SCALE	PHASE	PROJECT / DRAWING No.	REVISION
AS NOTED	TENDER	30013046-153	02.1

150 mm ON ORIGINAL
A1

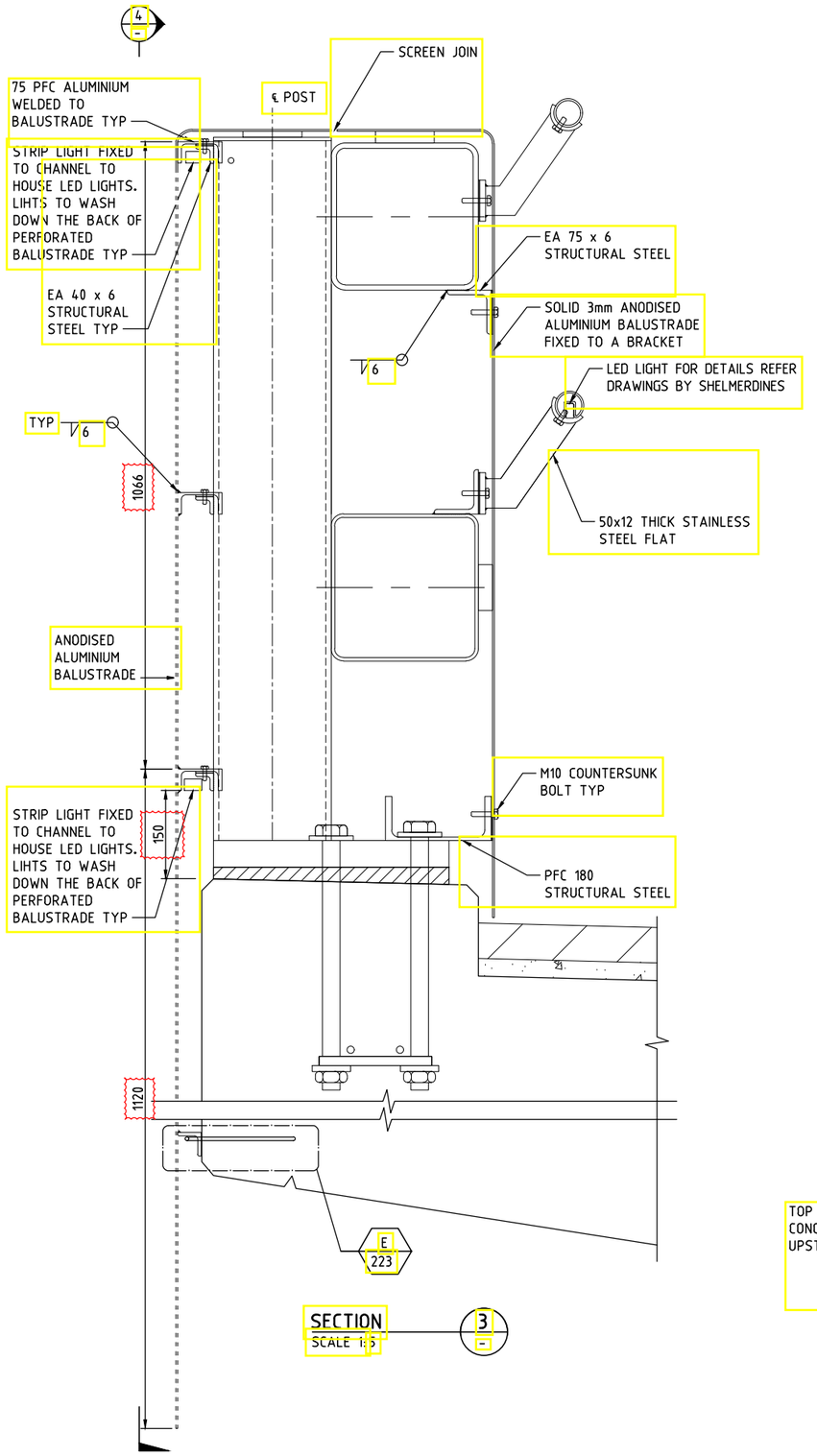

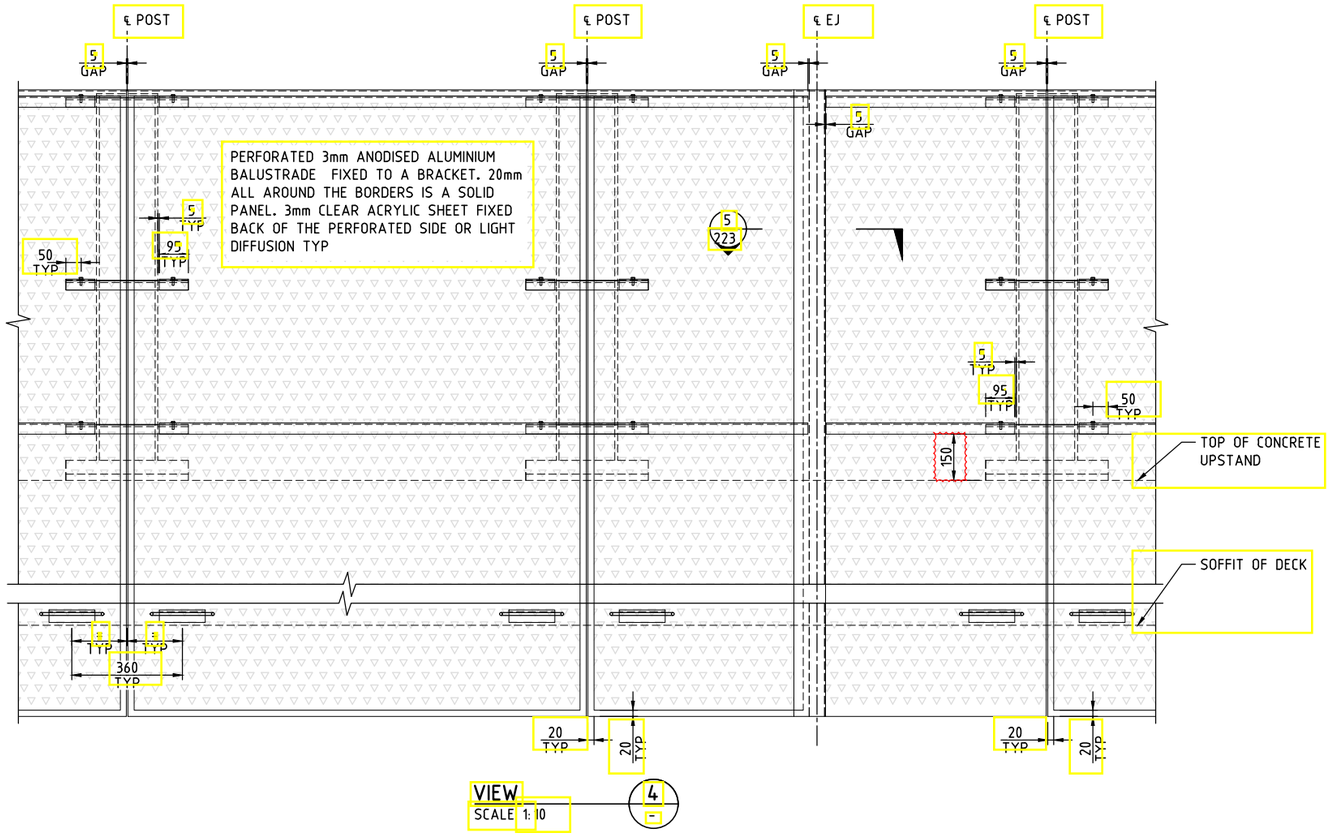

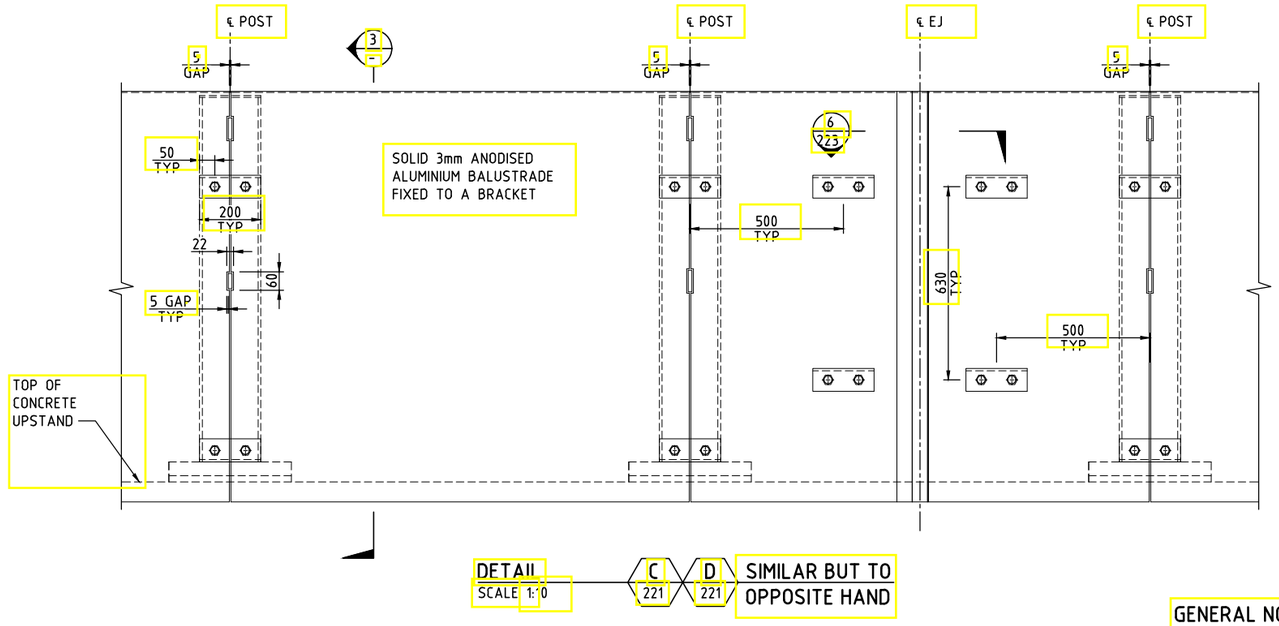

CITY OF RYDE
APPROVED FOR CONSTRUCTION
LDA.....
Signed.....
Date.....01 OCT 2021
Subject to the Conditions of Development Consent

GENERAL NOTES
FOR ALL NOTES RELATED TO THIS SHEET, REFER DRG No 223.

DRAWING FILE LOCATION / NAME	PLOT DATE	TIME
V:_Vault\Projects\3001\30013046\110_CADD\CAD\DWG\30013046-222.dwg	13 Sep 2021	17:53:06

EXTERNAL REFERENCE FILES	REV	DATE	AMENDMENT / REVISION DESCRIPTION	WVR No.	APPROVAL	TITLE	NAME
	01	20.08.2021	ISSUED FOR TENDER	001	JD	DRAFTER	T.SABAPATHI
						DRAFTING CHECK	V.S.KODURU
						DESIGNER	V.S.KODURU
						DESIGN CHECK	V.BALAKRISHNAN
						PROJECT MANAGER	J.DICKERSON
						PROJECT DIRECTOR	K.LUU

SCALES AT A1 SIZE DRAWING

DESIGNER
SMEC
Member of the Surbana Jurong Group
© ABN 47 065 475 149
LEVEL 5, 20 BERRY STREET
NORTH SYDNEY NSW 2060
SMEC PROJECT No 30013046

CLIENT
FRASERS PROPERTY

PROJECT TITLE
SHRIMPTON CREEK BRIDGE
CLADDING DETAILS
SHEET B

SCALE	PHASE	PROJECT / DRAWING No.	REVISION
AS NOTED	TENDER	30013046-222	01.1

150 mm ON ORIGINAL
A1
X_30013046_SMEC_A1
X_BRG_SEC

Eric Hausfeld

From: Chris Koukoutaris <Chris.Koukoutaris@frasersproperty.com.au>
Sent: Thursday, 30 September 2021 8:33 AM
To: Gregg.Klopp@robertbird.com.au; 'Mitchell STARKEY'
Cc: Stephen Peters; benm@adwjohnson.com.au; 'steve.rimmer@RARI.COM.AU'; David Taylor (dtaylor@shelmerdines.com.au); Stephen Peters; Eric Hausfeld
Subject: RE: Shrimptons Creek Bridge Compliance
Attachments: Approved Water Design.zip; Approved Sewer Design.zip; Approved NBN Design.zip; Approved Electrical Design.zip

Hi Gregg / Mitchell,

Please find attached the approved utility services design to be included in your report to tick of item F of condition B103.

I have also attached the Utility services reports that were lodged with the our masterplan application and our stage 1 DA (which covers off the infrastructure works on the site including the bridge)

These utility reports where **referred to all agencies via the Department of Planning** when our applications went on exhibition

Masterplan Report
Appendix K - Utility Services Report - ADW Johnson.pdf

Stage 1 DA Report

Appendix K - Utilitiy Services Report.pdf

Thanks and look forward to closing out your report

Approved Design for each services is attached in the ZIP folders:

- Water
- Sewer
- NBN
- Electrical

Please note Frasers developments do not have GAS

Chris Koukoutaris
Senior Development Manager
Frasers Property Australia

T +61 2 9767 2223 **M** +61 434 034 371
E Chris.Koukoutaris@frasersproperty.com.au
Level 2, 1C Homebush Bay Drive, Rhodes NSW 2138 Australia
www.frasersproperty.com.au | LinkedIn | YouTube

From: Chris Koukoutaris
Sent: Thursday, 30 September 2021 12:07 AM
To: Eric Hausfeld <Eric@ldc.com.au>
Cc: Stephen Peters <Stephen.Peters@fraserproperty.com.au>
Subject: Re: Shrimptons Creek Bridge Compliance

Eric,

In re-reading the condition below B103 (f) below I disagree with your take on this.

The condition does not state consult with all authorities and provide evidence of consultation.
It states "correspondence and approvals from utility authorities with regards to any utility services" which in our case is only street lighting required to serve our development across the bridge.

I will provide all the approved utilities drawings the RBG to refer in there report which shows these services are not required through the bridge to serve our development and to satisfy RBG.

(f) concept drawings, correspondence and approvals from utility auth
that will need to be installed in the proposed bridge

Thanks

Regards
Chris Koukoutaris
Frasers Property Australia

On 29 Sep 2021, at 10:54 pm, Eric Hausfeld <Eric@ldc.com.au> wrote:

EXTERNAL EMAIL: Do not click links or open attachments unless you recognise the sender and know the content is safe.

Good Evening Chris,

The independent reviewer will need to be satisfied that all utility authorities have been consulted with regard to utility servicing for the bridge. I note your advice that there is only street lighting required but I would expect that the independent reviewer will require documentation from all utility authorities to confirm that they have no requirement for services or ducting for future services. All documentation required by this condition will need to be submitted to me.

<image002.png>

Regards

Eric Hausfeld
Director/Accredited Certifier
<image003.png>

Suite 7, 76 Henry Street, Penrith |PO Box 125, Penrith NSW 2751 |Phone: 02 4722 8278 |**www.Ldc.com.au**

This email and its attachments may contain confidential and/or privileged information for the sole use of the intended recipient(s). If you are not the intended recipient, any use, distribution or copying of the information contained in this email and its attachments Is strictly prohibited. If you have received this email in error, please email the sender by replying to this message and immediately delete and destroy any copies of this email and any attachments.

From: Chris Koukoutaris <Chris.Koukoutaris@frasersproperty.com.au>
Sent: Wednesday, 29 September 2021 9:41 PM
To: Eric Hausfeld <Eric@LDC.com.au>
Cc: Gregg.Klopp@robertbird.com.au; 'Mitchell STARKEY' <Mitchell.Starkey@robertbird.com.au>; Stephen Peters <Stephen.Peters@frasersproperty.com.au>; james.dickerson@smec.com; Vijay RAMAMURTHY <Vijay.Ramamurthy@smec.com>; benm@adwjohnson.com.au
Subject: RE: Shrimptons Creek Bridge Compliance

Hi Eric,

We have requested RBG to clearly state condition B103 conditions to be referenced in the report

Regarding condition B103 (f) though can you please confirm what you would like to see on this?

The only service running through the bridge is the street lighting conduits. There are no other utility services running through.

FPA can provide the bridge street lighting approval from Council once received, which is close (please refer attached email from Councils external consultant.

Thanks and your earliest response would be greatly appreciated

Regards,

Chris Koukoutaris
Senior Development Manager
Frasers Property Australia

T +61 2 9767 2223 **M** +61 434 034 371
E Chris.Koukoutaris@frasersproperty.com.au
Level 2, 1C Homebush Bay Drive, Rhodes NSW 2138 Australia
www.frasersproperty.com.au | LinkedIn | YouTube

<image004.jpg>

From: Chris Koukoutaris
Sent: Wednesday, 29 September 2021 9:33 PM
To: 'Mitchell STARKEY' <Mitchell.Starkey@robertbird.com.au>; Gregg.Klopp@robertbird.com.au
Cc: 'Craig FURNESS' <Craig.Furness@robertbird.com.au>; Vijay RAMAMURTHY <Vijay.Ramamurthy@smec.com>; james.dickerson@smec.com; benm@adwjohnson.com.au; Stephen Peters <Stephen.Peters@frasersproperty.com.au>; Peter Statham <peter.statham@frasersproperty.com.au>
Subject: RE: Shrimptons Creek Bridge Compliance

Hi Gregg,

By way off introduction my name is Chris Koukoutaris and I am the Senior Development Manager on the Ivanhoe project which the Shrimptons Creek bridge is to be constructed.

We have received some feedback from our certifier with respect to the report provided via RBG. Please see below comment in red:

- ***The independent review, dated 27/09/2021, provided by Robert Bird Group does not reference or verify the requirements of condition B103. I note that some of these requirements are addressed by the BMT report, Rev 1 dated 16/07/2021 but there needs to be a coordinated signoff by the independent reviewer to satisfy the requirements of condition B103. I cannot identify from the documentation provided how some of the requirements of this condition have been met.***

The RBG report (attached) needs to close out and reference the DA conditions B103 (a – g) have been closed out.

Please note this was our scope request to RBG (email attached)

Thanks and your earliest close out would be greatly appreciated.

<image005.png>

Chris Koukoutaris
Senior Development Manager
Frasers Property Australia

T +61 2 9767 2223 **M** +61 434 034 371
E Chris.Koukoutaris@frasersproperty.com.au
Level 2, 1C Homebush Bay Drive, Rhodes NSW 2138 Australia
www.frasersproperty.com.au | LinkedIn | YouTube

<image004.jpg>

From: Chris Koukoutaris
Sent: Wednesday, 29 September 2021 2:35 PM
To: Mitchell STARKEY <Mitchell.Starkey@robertbird.com.au>
Cc: Craig FURNESS <Craig.Furness@robertbird.com.au>; Stephen Peters <Stephen.Peters@frasersproperty.com.au>; Peter Statham <peter.statham@frasersproperty.com.au>
Subject: RE: Shrimptons Creek Bridge Compliance

Hi Mitchell,

Please find below my comments in red to our certifier regarding the bridge certification.

Can you please and updated your report in line with his comments?

- The independent review, dated 27/09/2021, provided by Robert Bird Group does not reference or verify the requirements of condition B103. I note that some of these requirements are addressed by the BMT report, Rev 1 dated 16/07/2021 but there needs to be a coordinated signoff by the independent reviewer to satisfy the requirements of condition B103. I cannot identify from the documentation provided how some of the requirements of this condition have been met. I will chase this via Robert Bird Group (Mitchell)

Chris Koukoutaris
Senior Development Manager
Frasers Property Australia

T +61 2 9767 2223 **M** +61 434 034 371
E Chris.Koukoutaris@frasersproperty.com.au
Level 2, 1C Homebush Bay Drive, Rhodes NSW 2138 Australia
www.frasersproperty.com.au | LinkedIn | YouTube

<image004.jpg>

From: Chris Koukoutaris
Sent: Wednesday, 29 September 2021 2:27 PM
To: Eric Hausfeld <Eric@LDC.com.au>
Cc: Peter Statham <peter.statham@frasersproperty.com.au>; Stephen Peters <Stephen.Peters@frasersproperty.com.au>; Ben Myles <benm@adwjohnson.com.au>; Anthony Payens <Anthony@LDC.com.au>; Vijay RAMAMURTHY <Vijay.Ramamurthy@smec.com>; james.dickerson@smec.com; Mitchell STARKEY <Mitchell.Starkey@robertbird.com.au>; Nathan Cheah <nathan.cheah@bmtglobal.com>; Craig FURNESS <Craig.Furness@robertbird.com.au>; Mathew Owen (matto@adwjohnson.com.au) <matto@adwjohnson.com.au>
Subject: RE: Shrimptons Creek Bridge Compliance

Hi Eric,

Please see some of my response below in red.

Thanks

Chris Koukoutaris
Senior Development Manager
Frasers Property Australia

T +61 2 9767 2223 **M** +61 434 034 371
E Chris.Koukoutaris@frasersproperty.com.au
Level 2, 1C Homebush Bay Drive, Rhodes NSW 2138 Australia
www.frasersproperty.com.au | LinkedIn | YouTube

<image004.jpg>

From: Eric Hausfeld <Eric@LDC.com.au>
Sent: Wednesday, 29 September 2021 1:46 PM
To: Chris Koukoutaris <Chris.Koukoutaris@frasersproperty.com.au>
Cc: Peter Statham <Peter.Statham@frasersproperty.com.au>; Stephen Peters <Stephen.Peters@frasersproperty.com.au>; Ben Myles <benm@adwjohnson.com.au>; Anthony Payens <Anthony@LDC.com.au>
Subject: Shrimptons Creek Bridge Compliance

EXTERNAL EMAIL: Do not click links or open attachments unless you recognise the sender and know the content is safe.

Hi Chris,

I have now reviewed all documentation and reports provided relating to the Shrimptons Creek Bridge. In reviewing the information provided there appears that there are some gaps in the documentation that we will need to closed out as identified below. I am happy to run through these matters, as a starting point, at our meeting later today, if appropriate.

- The independent review, dated 27/09/2021, provided by Robert Bird Group does not reference or verify the requirements of condition B103. I note that some of these requirements are addressed by the BMT report, Rev 1 dated 16/07/2021 but there needs to be a coordinated signoff by the independent reviewer to satisfy the requirements of condition B103. I cannot identify from the documentation provided how some of the

requirements of this condition have been met. I will chase this via Robert Bird Group (Mitchell)

- Structural design certification is to be provided by SMEC. The structural design certification must also directly address the requirements of condition D41. I will chase this via SMEC (Vijay / James)
- Certification is required to confirm that the design of works on waterfront land is in accordance with Guidelines for Controlled Activities(2019) as required by condition C40. Please refer attached email from ADWJ, also I believe there is a note on the civil drawings that the Guidelines for Controlled Activities must be met via the engaged contractor
- The BMT report, Rev 1 dated 16/07/2021 does not reference specific versions of SMEC and ADWJ drawing sets. The report should be updated to confirm that the assessment has been undertaken on the final design identified in these drawing sets. I will chase this via BMT
- The extent of scour protection identified on the SMEC drawings (sht 211) does not appear to be consistent with the area identified on page 22 of BMT report, Rev 1 dated 16/07/2021. It is important that the designs, reports and certifications are coordinated as BMT conclusions may not be valid if based on different design drawings/ parameters. James / Vijay can you please comment on this??
- The BMT report, Rev 1 dated 16/07/2021 only make statements as to no adverse impact to adjoining properties up to 1% AEP. It is not clear if this statement closes out condition B103(e). I will chase this with BMT (Nathan)
- The plans do not appear to identify any controls to ensure that the surface of scour protection required to be installed is consistent with the flood modelling parameters (no encroachment into the design floodway cross-sectional area). James / Vijay can you please comment?
- Adjoining owner consent will be required for any works associated with the bridge outside the land identified in the development consent. The plans do not identify site boundaries but it appears that scour protection works are proposed on land beyond the development site. What land owners consent LAHC own the Shrimptons Creek land?? Who would you like us to obtain this from??

I would also like to raise the following matters for discussion/ response:.

- Did the peer review incorporate a road safety audit/ assessment of the design. James / Vijay can you please confirm?
- Will the bridge be named? No Has this process commenced? Road 1 street names is currently being negotiated with Council, road 2 is going to be Sandstone Crescent (please refer attached email – street naming strategy)
- What is the status of the Biodiversity Management Plan and relationship to these works with reference to condition B47, E20 and advice AN8 This has been approved, please find attached approved report and sign-off (please note there is no biodiversity planting in Shrimptons Creek though, this is along Epping road), DPIE water signed off on version 4 of the VMP but the DPIE wanted further changes, hence version 5, please find attached there sign-off (condition B3 and B47)
- How will constructed works be verified to confirm compliance with flood report/ modelling? Do plans have sufficient information for certification by BMT at the completion of the works? This will be the responsibility of the D&C contractor selected
- Wrt to condition B91 the verge width appears to comply with the requirements of this condition but noting that the full verge width is not available for pedestrians/ cyclists due to obstruction by barriers. Was this matter addressed/ considered at the development application stage? Don't understand your comment?
- Who will be responsible for preparing specialist sediment and erosion controls for the bridge works? NB. This has not been addressed in the ADWJ civil set. Ben / James / Vijay can you please confirm?

Regards

Eric Hausfeld
Director/Registered Certifier
<image003.png>

Suite 7, 76 Henry Street, Penrith |PO Box 125, Penrith NSW 2751 |Phone: 02 4722 8278 |**www.Ldc.com.au**

This email and its attachments may contain confidential and/or privileged information for the sole use of the intended recipient(s). If you are not the intended recipient, any use, distribution or copying of the information contained in this email and its attachments Is strictly prohibited. If you have received this email in error, please email the sender by replying to this message and immediately delete and destroy any copies of this email and any attachments.

From: Chris Koukoutaris <Chris.Koukoutaris@frasersproperty.com.au>
Sent: Tuesday, 28 September 2021 9:04 AM
To: Eric Hausfeld <Eric@LDC.com.au>
Cc: Peter Statham <peter.statham@frasersproperty.com.au>; Stephen Peters <Stephen.Peters@frasersproperty.com.au>
Subject: FW: Frasers Property - Introduction

Hi Eric,

Please find the independent bridge review by Robert Bird Group.

This closes out condition B103

Thanks and please confirm acceptance?

Regards

Chris Koukoutaris
Senior Development Manager
Frasers Property Australia

T +61 2 9767 2223 **M** +61 434 034 371
E Chris.Koukoutaris@frasersproperty.com.au
Level 2, 1C Homebush Bay Drive, Rhodes NSW 2138 Australia
www.frasersproperty.com.au | LinkedIn | YouTube

<image004.jpg>

From: Craig FURNESS <Craig.Furness@robertbird.com.au>
Sent: Tuesday, 28 September 2021 8:50 AM
To: Chris Koukoutaris <Chris.Koukoutaris@frasersproperty.com.au>; Mitchell STARKEY <Mitchell.Starkey@robertbird.com.au>
Cc: Stephen Peters <Stephen.Peters@frasersproperty.com.au>; Vijay RAMAMURTHY <Vijay.Ramamurthy@smec.com>; James DICKERSON <James.Dickerson@smec.com>; Peter Statham <Peter.Statham@frasersproperty.com.au>
Subject: RE: Frasers Property - Introduction

EXTERNAL EMAIL: Do not click links or open attachments unless you recognise the sender and know the content is safe.

Hi Chris,
Please find attached RBG response. I believe this closes out all items.

Regards

Craig Furness
PRINCIPAL (CENTRAL REGION)

Level 6, 100 Pacific Highway, North Sydney, NSW, 2060, Australia
Phone: 02 82463200
Mobile: 0427 495 121
Website: www.robertbird.com

<image006.png>

<image007.png> <image008.png> <image009.png> <image010.png>

IMPORTANT NOTICE TO OUR CLIENTS, VISITORS AND SUPPLIERS: Robert Bird Group makes the health and wellbeing of our communities, clients and employees a priority We are taking positive and proactive steps to protect our staff, company, clients and our communities. Whilst the world is combatting the spread of coronavirus, with government restrictions on workplaces and travel, we have measures in place to deal with the current impacts of this; including our staff working fully remotely which enables us to continue to deliver on our projects as a top focus. We remain available for contact via email, phone or videoconference through this period. Thank you for your cooperation and understanding a strive to combat the spread of this global pandemic .

The contents of this email, including any attachments, are intended solely for the use of the individual or entity to whom they are addressed. If you are not an intended recipient, pl contact us immediately by return email and then delete both messages. You may not otherwise read, forward, copy, use or disclose this email or any attachments. Any views expres in this email are those of the individual sender except where the sender expressly, and with authority, states otherwise. It is your responsibility to check any attachments for viruses defects before opening or sending them on. None of the sender or its related entities accepts any liability for any consequential damage resulting from this email containing compute viruses.

From: Chris Koukoutaris <Chris.Koukoutaris@frasersproperty.com.au>
Sent: Wednesday, 18 August 2021 4:15 PM
To: Eric Hausfeld <Eric@LDC.com.au>
Cc: Peter Statham <peter.statham@frasersproperty.com.au>; Stephen Peters <Stephen.Peters@frasersproperty.com.au>
Subject: FW: AN-22381 NORTH RYDE - Certified Design - 2 EPPING ROAD, NORTH RYDE

Hi Eric,

Please find attached the stage 2 electrical conduit design approval.

Please also refer emails below

Thanks

Chris Koukoutaris
Senior Development Manager
Frasers Property Australia

T +61 2 9767 2223 **M** +61 434 034 371
E Chris.Koukoutaris@frasersproperty.com.au
Level 2, 1C Homebush Bay Drive, Rhodes NSW 2138 Australia
www.frasersproperty.com.au | LinkedIn | YouTube

From: David Taylor <dtaylor@shelmerdines.com.au>
Sent: Friday, 30 April 2021 10:43 AM
To: Chris Koukoutaris <Chris.Koukoutaris@frasersproperty.com.au>
Cc: Scott Clohessy <Scott.Clohessy@frasersproperty.com.au>; Andrei Matiouk <amatiouk@shelmerdines.com.au>; Elbert Wang <Elbert@shelmerdines.com.au>
Subject: FW: AN-22381 NORTH RYDE - Certified Design - 2 EPPING ROAD, NORTH RYDE

EXTERNAL EMAIL: Do not click links or open attachments unless you recognise the sender and know the content is safe.

Hi Chris,

Attached is the certified design for the Stage 2 conduits.

Regards

David Taylor

Shelmerdines Consulting Engineers
Tel: (02) 9436 3021
Mob: 0419 615 351
Email: dtaylor@shelmerdines.com.au
Web: www.shelmerdines.com.au

Before printing this email, please assess if it is really necessary

From: Ausgrid Customer Team <CRM-no-reply@Ausgrid.com.au>
Sent: Friday, 30 April 2021 10:20 AM
To: David Taylor <dtaylor@shelmerdines.com.au>
Cc: Jan Bartosiak <jbartosiak@ausgrid.com.au>
Subject: AN-22381 NORTH RYDE - Certified Design - 2 EPPING ROAD, NORTH RYDE

Dear David,

Ausgrid has certified the electrical design plan(s) for the above project. The certification number for this design is 5596369/20210428. In providing this certification, Ausgrid makes no warranty, express or implied that the design is fit for the intended purpose or is suitable for the site conditions. The certification is provided exclusively on the basis of the design submitted without reference to any underlying assumptions or conditions.

Your client will be notified of the drawing certification and the conditions that must be met for the project to proceed to the next stage.

The certified design plan(s) along with the approved SER worksheet are attached.

Should you require any further information please contact me on the phone number or email address detailed below.

Best Regards,

Jan Bartosiak | Customer Connections | Ausgrid

Email: jbartosiak@ausgrid.com.au | Phone: 0285696728

This e-mail may contain confidential or privileged information. If you have received it in error, please notify the sender immediately via return e-mail and then delete the original e-mail. If you are the intended recipient, please note the change of sender email address to @ausgrid.com.au. Ausgrid has collected your business contact details for dealing with you in your business capacity. More information about how we handle your personal information, including your right of access is contained at http://www.ausgrid.com.au/

Message protected by MailGuard: e-mail anti-virus, anti-spam and content filtering.
http://www.mailguard.com.au

Report this message as spam

Message protected by MailGuard: e-mail anti-virus, anti-spam and content filtering.
http://www.mailguard.com.au